PRODUCT CATALOGUE 2020

WINDOW WARE

We've got it

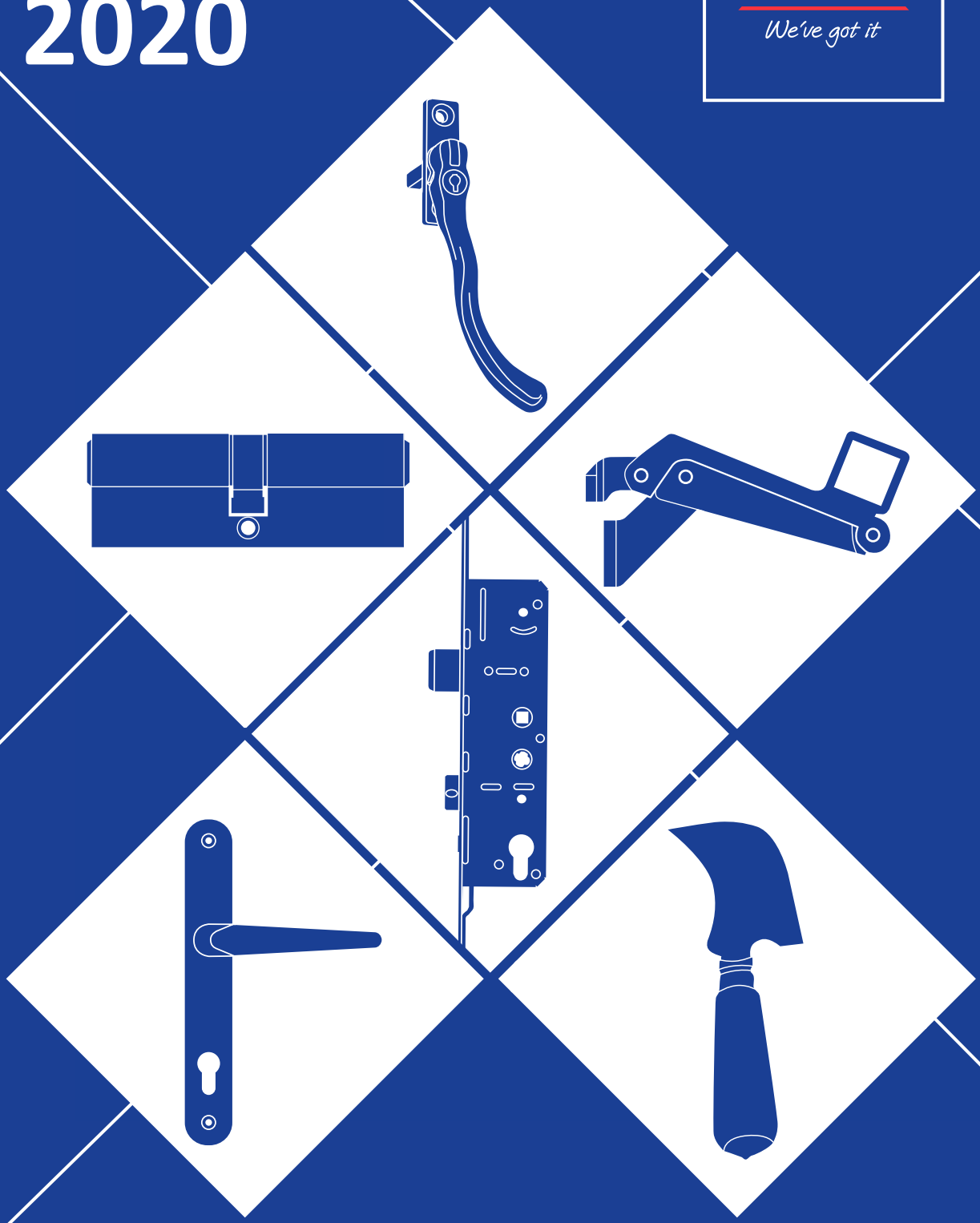

Welcome to the 2020 Window Ware product catalogue.

Since the last issue, we've added no less than 714 individual new items and as many as 30 new ranges to our repertoire. Constantly expanding our product offering is all part of our continuing mission to bring fabricators and installers more choice than any other UK hardware distributor to simplify their supply chain, meet market trends and fulfil their emerging wish-lists. We've worked particularly hard on bringing in products that are PAS 24 compliant and SBD certified, so that we're able to support fabricators in meeting not just Approved Document Q security regulations for new builds, but also the high expectations of increasingly security-conscious customers. You'll find all of these recent arrivals included in this latest issue of our jam-packed giant catalogue – an essential look-up tool for anyone in the trade.

It's worth noting that while we do our best to ensure all the details in this catalogue are correct at time of print, naturally things change as new products arrive and old ones become obsolete. For the most current, dynamic information, please visit our website **www.windowware.co.uk**. Make sure you log in to your account to view discounted trade-only prices. Why not keep an eye out for our dedicated hardware newsletter called On Point. This filled-to-the-brim bulletin comes out twice a year and is a great way to stay in the loop with what's hot and happening at Window Ware.

Don't forget, each and every product we sell is accompanied by our award-winning customer service, our reliable delivery credentials that promise 97% of orders arrive spot-on the very next working day, not forgetting well-founded product knowledge and sound technical advice that leaves no question unanswered and no hardware requirement unmet!

Happy hardware hunting!

Regards,
Your Window Ware team

Supporting fabricators from start to finish

Hardware for PVCu Profiles

Hardware for Composite Doors

Hardware for Aluminium Profiles

Tools & Consumables

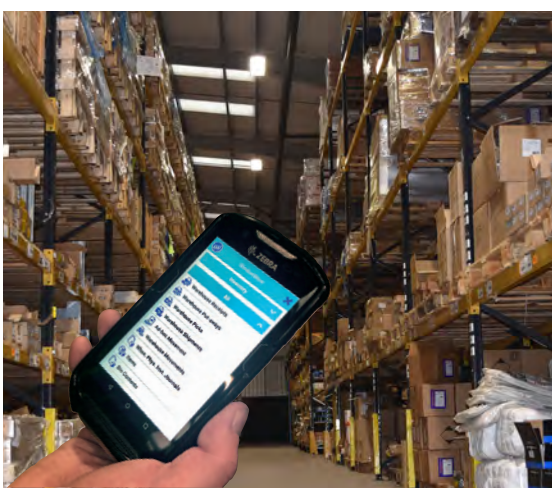

Capacity 36,000 ft² premises

Availability £2.5 million stockholding

Reliability 97% of orders arrive On Time In Full

Choice 6,500 products from 87 of the industry's leading brands

Superior service as standard

Dependable deliveries
Our +97% average OTIF means you get the hardware you want, when and where you need it

Fast response
95% of calls answered in 3 rings or less by real people rather than robots

Dedicated sales support
Giving you consistent, familiar points of contact for a closer supply partnership

Extra effort
Last year, we sourced 2853 non-stocked items because customers asked for them

Always in the loop
Stay informed with email order confirmations, back order notifications & delivery tracking

Quality & choice
6,500+ quality branded products from a single source with an ultra-low 0.12% return rate

7 ways to do business
Place your orders by email, phone, fax or web and pay by BACS, credit card or online

Expertise on tap
From a clued-up crew of industry experts, ex-fitters and fabricators with wisdom to share

Where fabricators and installers go for the industry's leading brands.

KONIG UK
Glazpart
SOUDAL
Regal Hardware
Simon
AVANTIS More than manufacturing
G-U
cubelock SAFE • SECURE • PEACE OF MIND
STRAND HARDWARE LIMITED
KENRICK
securistyle
CALDWELL
WINK HAUS
MILA Quality & service | It's in our DNA
GT WINDOW PRODUCTS LIMITED
Xpert
EUROSPEC
rapierstar
Stormguard
OMEC
Cotswold Architectural Products
rexon Seal the world...
Greenwood AIRVAC
KENDO Your Professional Partner
HOPPE Handle of excellence.
maco
TROJAN ...The Strength of Hardware Design
Yale

How can we help?

Specialist expertise

Our fenestration-trained staff are a knowledgeable bunch. Over 50% have worked for us for 10 years or more, giving you the very best advice, from the very best people.

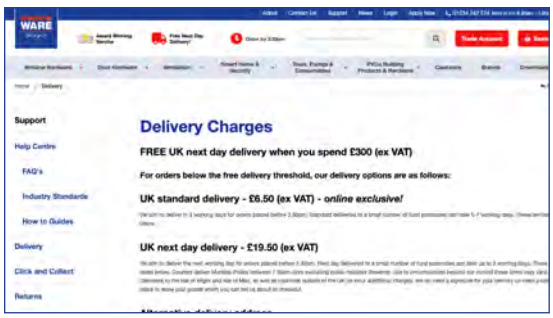

Delivery:

Please visit our website
www.windowware.co.uk
for the latest delivery rates
and FREE delivery thresholds

Get in touch:

T **01234 242724**
F **01234 242700**
E **sales@windowware.co.uk**
W **www.windowware.co.uk**

Window Ware
Telford Way, Cross Park
Bedford MK42 0PQ

SME BEDFORDSHIRE Business Awards 2018 WINNER

G18 AWARDS FINALIST

SME LUTON & BEDFORDSHIRE Business Awards 2019 FINALIST

CAB Council for Aluminium in Building

WINDOW WARE GLAZING SUMMIT Sponsors

What's new?

Just some of the new products featured in this catalogue...

Regal Hardware	**Flush Sash Window Hardware** *See pages 60-64*	AVANTIS More than manufacturing	**Multipoint Door Locks** *See pages 129-132*
cubelock SAFE ▪ SECURE ▪ PEACE OF MIND	**Window Restrictors** *See page 49*	Kubu®	**Set-for-Smart Kubu Door Lock** *See page 205*
CALDWELL	**Bi-fold Hardware** *See pages 337-343*	GT WINDOW PRODUCTS LIMITED	**Window and Door Security** *See pages 44, 404*
Yale LOCKMASTER 21	**Lockmaster 21 Multipoint Door Locks** *See pages 112-115*	HIGHLINE® WINDOW CONTROLS	**Highline Window Controls** *See pages 70-82*
Yale®	**AutoEngage Multipoint Door Locks** *See pages 125-128*	maco	**MKV Shootbolt** *See page 40*
Yale®	**Bi-fold Multipoint Door Locks** *See pages 148-151*	MILA Quality & service | It's in our DNA	**Supa™ Pull Handles** *See pages 228-233*
maco	**Z-TA Slam Multipoint Door Locks** *See pages 136-137*	CALDWELL	**Folding Openers** *See pages 66-67*
rexon Seal the world...	**Silicone, Sealants & Foams** *See pages 381, 384-387, 392-395*	MADE IN ITALY OMEC®	**Panic Bars** *See page 213*
KENDO® Your Professional Partner	**Hand Tools** *See pages 409, 411-416, 421, 423, 436-437 & 441*	DUCO Ventilation & Sun Control	**Louvre Grilles** *See pages 102-103*

Our mission is to deliver superior quality and service that:

Customers expect & recommend to others,
Employees are proud to be a part of,
and industry leading **Brands** can trust.

CONTENTS

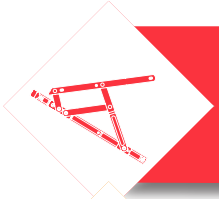

Window Hardware 3-82

Tilt Before Turn 83-90

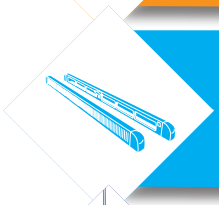

Ventilation 91-106

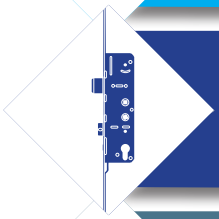

Door Hardware 107-284

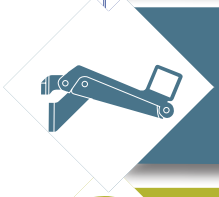

Hardware for Aluminium Systems 285-366

Tools, Fixings & Consumables 367-448

Bow Canopies 449-471

Index 472-473

Terms & Conditions 474-476

MARK OF DISTINCTION

HERITAGE HARDWARE DESIGNED TO ENHANCE BOTH FLUSH AND 70MM SYSTEMS

Secure Key Locking

Modern-Day Appeal

Bygone Beauty

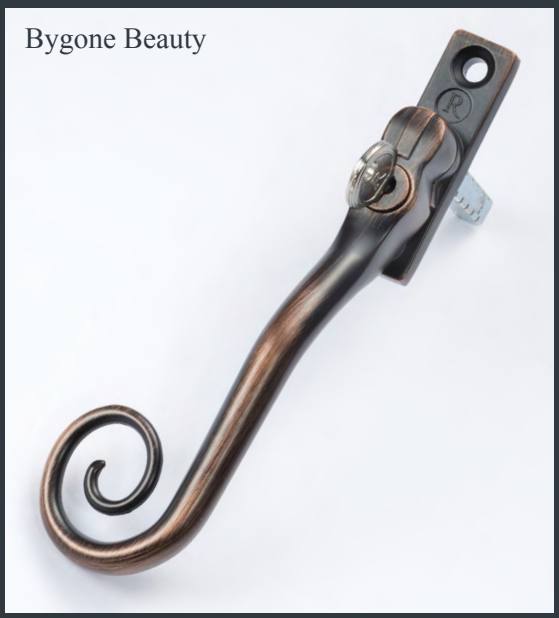

Resounding Quality

Regal Hardware

Exclusively available from Window Ware
see pages 60-64

WINDOW WARE
We've got it

T 01234 242724 **E** sales@windowware.co.uk **W** windowware.co.uk

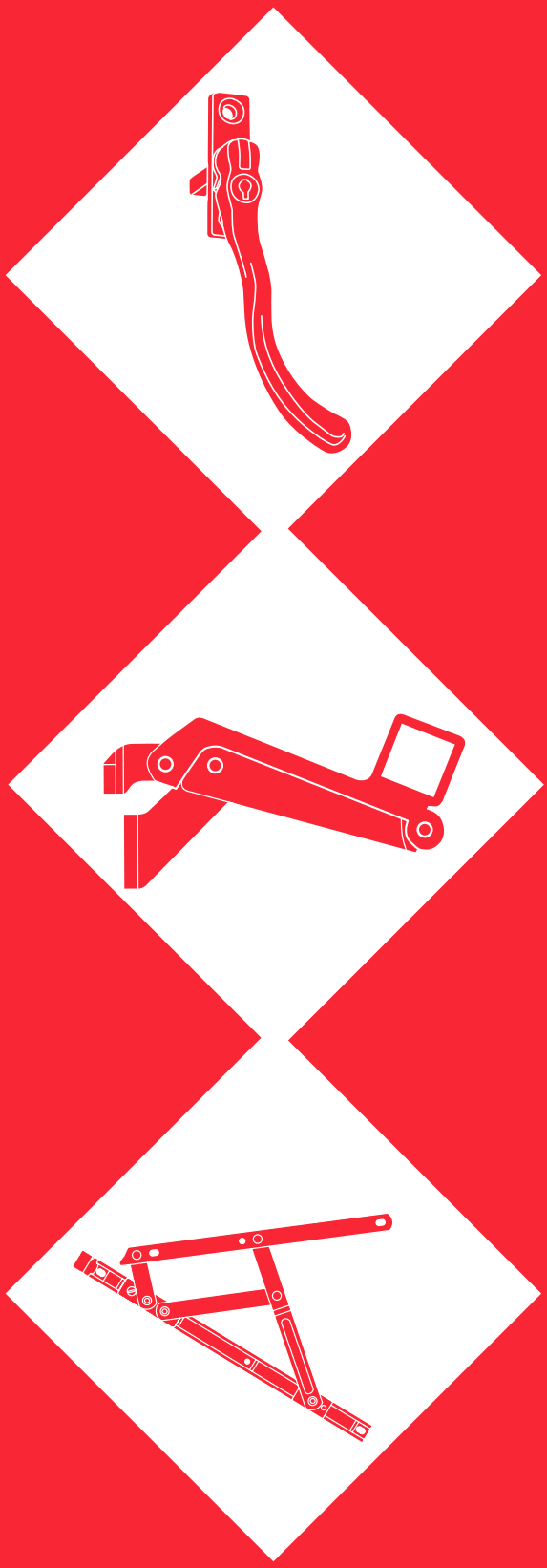

Friction Hinges	**4-23**
For Triple Glazing	14 & 22-23
Kore	6-9
Cotswold	10-15
Yale	16-18
Securistyle	19-22
Trojan	23
Espagnolette Bars	**24-33**
MACO	25, 27 & 32
Kore	26
Cotswold	28-29
Kenrick	30-31
Yale	33
Shootbolts	**24 & 34-45**
Yale	34-35
MACO	38-40
Trojan	45
French Casement Gearing	**36 & 41**
Yale	36
MACO	41
Flush Sash	**37 & 42**
Yale	37
MACO	42
Wrap-Around Gearing	**43-44**
MACO	43
GT Window Products	44
Hinge Protectors	**46-47**
Restrictors	**48-53**
Cube	49
Cotswold	50
JJ Banks	50
Kore	50 & 53
Yale	53
Securistyle	51
Sash Seal & Locating Wedges	**52-53**
Sash Security	**53**
Cockspur Handles	**54-56**
Espagnolette Handles	**54-61**
Mila	57-58
Securistyle	59
Trojan	59
Herritage Hardware	**60-64**
Regal Espagnolete Handles	60-61
Regal Stays & Pegs	62-64
Folding Openers	**66-69**
Caldwell	66-67
Strand Duoflex	68-69
Highline Window Controls	**70-82**
Manual Controls	70-77
Electrical Controls	78-82

Opening Angle Diagrams

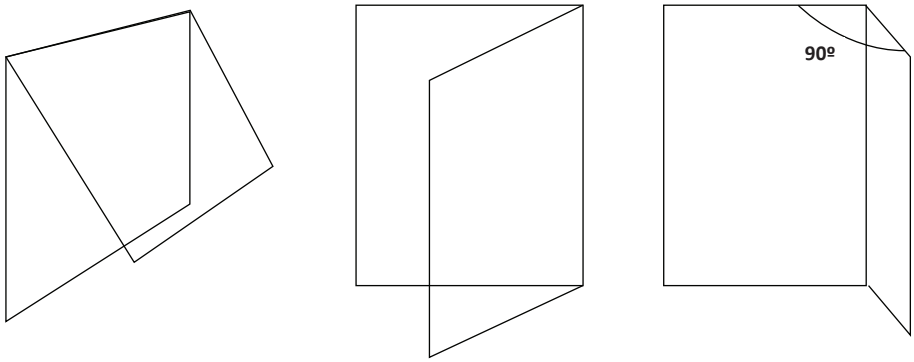

Top Hung | Side Hung | Egress (90º Opening)

Required measurements
(side hung version shown)

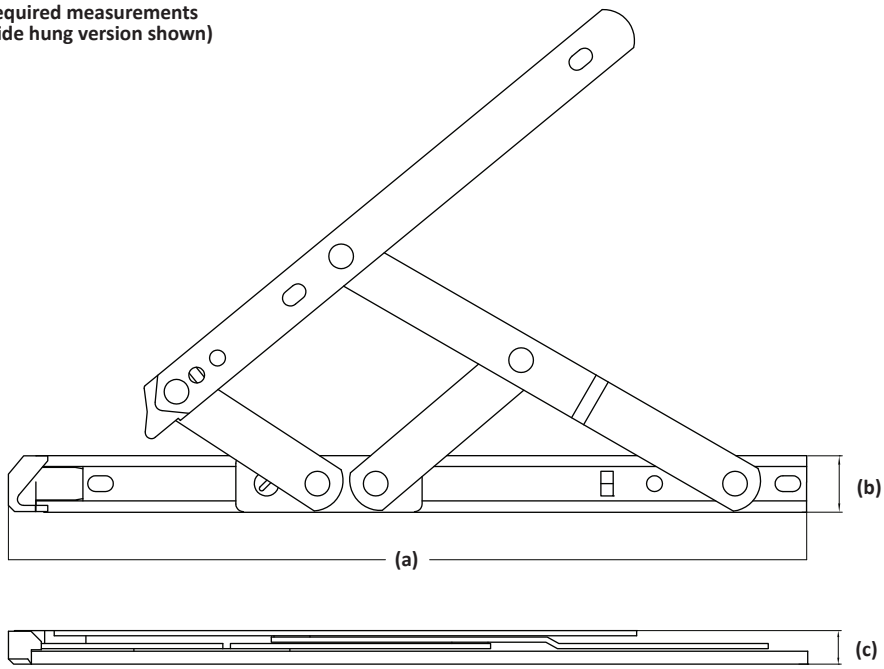

Required information

(a)	Length in inches	i.e. 10"
(b)	Width in millimetres	i.e. 18mm
(c)	Depth of hinge (stack height)	13, 16 or 17mm
(d)	Top hung, side hung or side hung egress?	

HINGE TYPE	POSITION		SIZE (INCH)								STACK HEIGHT (mm)			MAX WEIGHT	OPENING ANGLE	BRAND	PAGE
	TOP	SIDE	6	8	10	12	13	16	20	24	13	16	17				
Standard	•			•	•	•		•	•	•	•		•	10-50kg	38º-62º	Cotswold	10
	•			•	•	•		•	•	•	•	•		10-50kg	38-87º	Kore	6
	•		•	•	•	•		•	•	•	•		•	10-35kg	37.5-80º	Securistyle	19
	•			•	•	•		•	•	•	•	•		12-35kg	38-65º	Yale	16
		•				•		•			•		•	20, 26kg	51-60º	Cotswold	10
		•				•		•			•	•		18, 24kg	84º, 87ª	Kore	6
		•				•		•			•		•	22, 24kg	60º	Securistyle	19
		•				•		•			•	•		22, 24kg	60º	Yale	16
Restricted	•					•		•	•	•	•		•	20, 24kg	48, 59º	Cotswold	11
	•					•		•	•	•	•		•	20-38kg	43-60ª	Kore	7
	•					•		•	•	•	•		•	20-35kg	37.5-65º	Securistyle	20
		•				•		•			•		•	20-32kg	45-59º	Cotswold	11
		•				•		•			•		•	20-24kg	46-60º	Kore	7
		•				•		•			•		•	22, 24kg	60º	Securistyle	20
Egress Only		•			•			•			•		•	21kg	85-90º	Cotswold	12
		•				•		•			•		•	16-22kg	84-88º	Kore	8
		•		•							13.5	16.5		33kg	90º	Trojan	23
		•				•		•			•	•	•	22, 24kg	86º	Yale	17
Egress Easy Clean		•					•	•			•		•	21kg	80-84º	Cotswold	13
		•				•		•			•		•	18-21kg	80-88º	Kore	9
		•				•		•			•	•	•	22, 24kg	80º, 90º	Securistyle	21
		•					•	•			•	•		22, 24kg	81º, 84º	Yale	18
Defender Plus	•									•	•		•	50kg	32º	Securistyle	22
		•						•			•		•	40kg	60º	Securistyle	22
Mega Egress Only		•		•							13.5	16.5		33kg	90º	Trojan	23
Egress Easy Clean Extreme		•				•		•			•		•	30-35kg	85º	Cotswold	14
Mega Egress Easy Clean		•					•				13.5	16.5		40kg	90º	Trojan	23
Parallel	•	•			11			18		36			•	25, 100, 200kg	107-180mm	Cotswold	15

Kore Standard Friction Hinge

CORROSION 10 year GUARANTEE

- Manufactured from 430 Grade Stainless Steel
- Standard range available in 8”, 10”, 12”, 16”, 20” & 24” top hung & 12” & 16” side hung
- 18mm track width

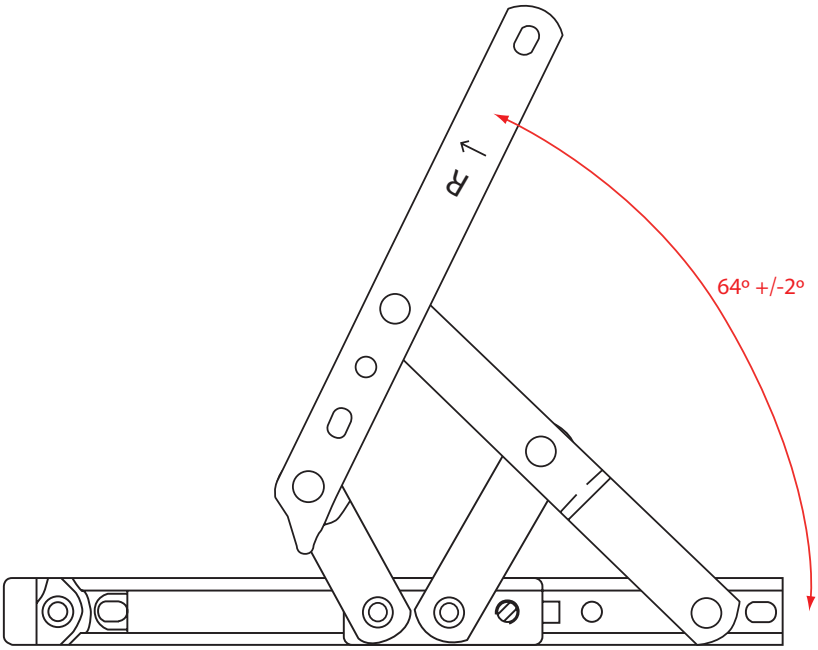

TYPE	SIZE	MAX VENT WEIGHT	MAX VENT WIDTH	MAX VENT HEIGHT	OPENING ANGLE	STACK HEIGHT 13mm	STACK HEIGHT 16mm	BOX QTY.
Top Hung	8 inch	10kg	1200mm	300mm	64º	HIN51208	HIN51408	25 Pairs
Top Hung	10 inch	16kg	1200mm	450mm	86º	HIN51210	HIN51410	25 Pairs
Top Hung	12 inch	21kg	1200mm	600mm	87º	HIN51212	HIN51412	25 Pairs
Top Hung	16 inch	22kg	1200mm	750mm	84º	HIN51216	HIN51416	25 Pairs
Top Hung	20 inch	24kg	1200mm	900mm	42º	HIN51220	HIN51420	25 Pairs
Top Hung	24 inch	50kg	1200mm	1500mm	38º	HIN51224	HIN51424	25 Pairs
Side Hung	12 inch	18kg	650mm	1250mm	87º	HIN52212	HIN52412	25 Pairs
Side Hung	16 inch	24kg	700mm	1300mm	84º	HIN52216	HIN52416	25 Pairs

CORROSION 10 year GUARANTEE

Kore Restricted Friction Hinge

- All hinges achieved BS 6375-2 and all hinges tested to Class 2 - 10,000 cycles
- Manufactured from 430 Grade Stainless Steel
- 18mm track width

Restrictor Operation

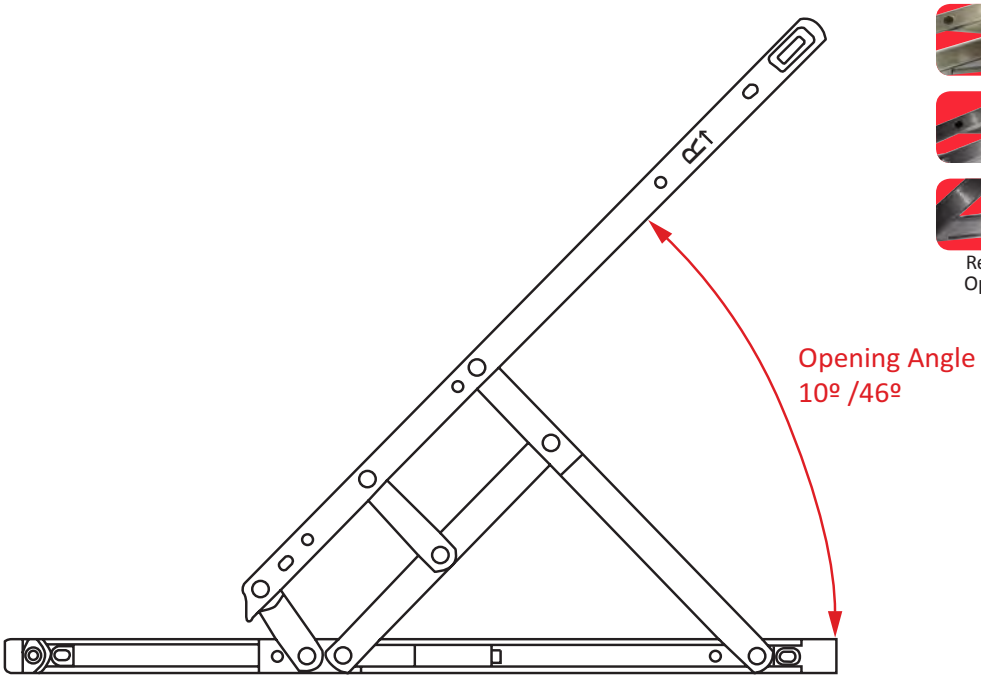

TYPE	SIZE	MAX VENT			OPENING ANGLE	RESTRICTED ANGLE	STACK HEIGHT		BOX QTY.
		WEIGHT	WIDTH	HEIGHT			13mm	17mm	
Top Hung	12 inch	20kg	1200mm	600mm	60º	10º	HIN54212A	HIN54412A	25 Pairs
Top Hung	16 inch	22kg	1200mm	750mm	46º	10º	HIN54216A	HIN54416A	25 Pairs
Top Hung	20 inch	24kg	1200mm	900mm	45º	7º	HIN54220A	HIN54420A	25 Pairs
Top Hung	24 inch	38kg	1200mm	1200mm	43º	7º	HIN54224	HIN54424	25 Pairs
Side Hung - LH	12 inch	20kg	600mm	1250mm	60º	10º	HIN53212A	HIN53412A	25 Pairs
Side Hung - LH	16 inch	24kg	700mm	1300mm	46º	10º	HIN53216A	HIN53416A	25 Pairs
Side Hung - RH	12 inch	20kg	600mm	1250mm	60º	10º	HIN53312A	HIN53512A	25 Pairs
Side Hung - RH	16 inch	24kg	700mm	1300mm	46º	10º	HIN53316A	HIN53516A	25 Pairs

Kore Egress Only Friction Hinge

CORROSION 10 year GUARANTEE

- All hinges achieved BS 6375-2 and all hinges tested to Class 2 - 10,000 cycles
- Manufactured from 430 Grade Stainless Steel
- Egress versions open to 85º (12'') or 90º (16'') providing clear egress in excess of 500mm on a 600mm wide vent
- 18mm track width

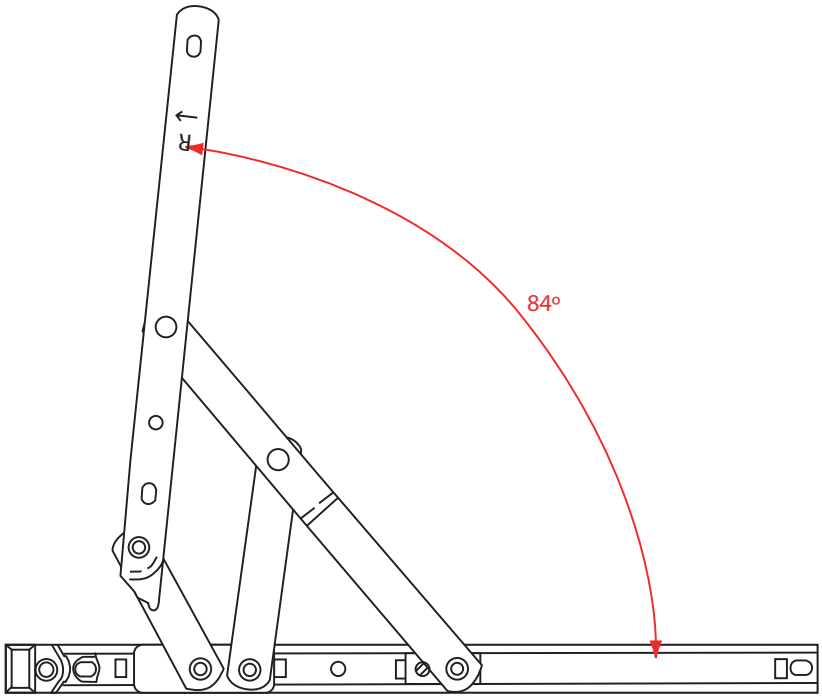

TYPE	SIZE	MAX VENT			OPENING	STACK HEIGHT		BOX QTY.
		WEIGHT	WIDTH	HEIGHT	ANGLE	13mm	17mm	
Side Hung	12 inch	16kg	600mm	1250mm	84º	HIN52612	HIN52712	25 Pairs
Side Hung	16 inch	22kg	650mm	1300mm	88º	HIN52616	HIN52716	25 Pairs

CORROSION 10 year GUARANTEE

Kore Egress Easy Clean Friction Hinge

- All hinges achieved BS 6375-2 and all hinges tested to Class 2 - 10,000 cycles
- Manufactured from 430 Grade Stainless Steel
- Egress versions open to 85º (12'') or 90º (16'') providing clear egress in excess of 500mm on a 600mm wide vent
- Patented easy clean mechanism allows window to slide across without the need to operate any awkward buttons
- 18mm track width

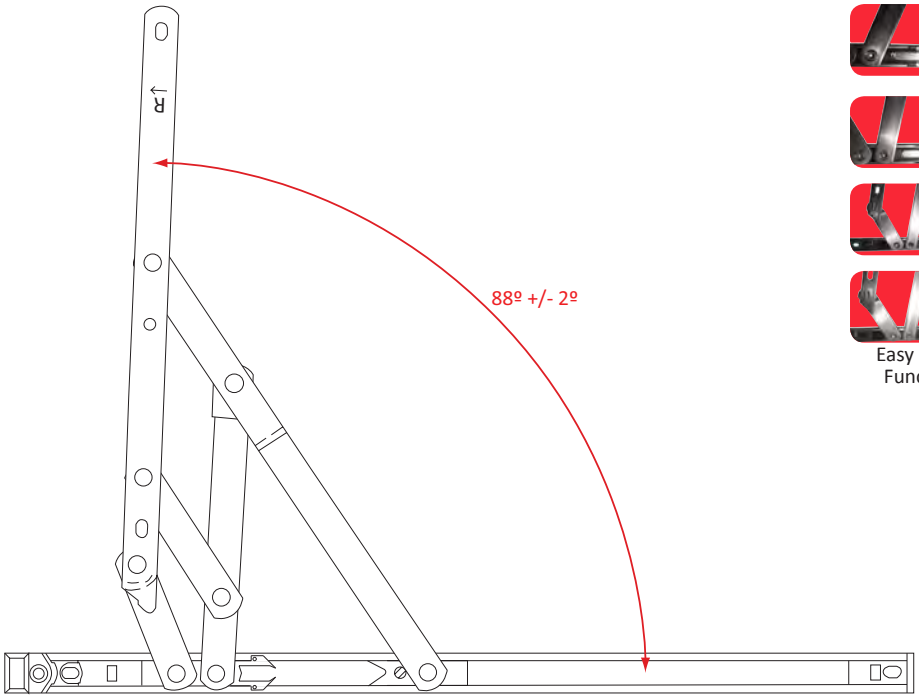

Easy Clean Function

TYPE	SIZE	MAX VENT			OPENING	STACK HEIGHT		BOX QTY.
		WEIGHT	WIDTH	HEIGHT	ANGLE	13mm	17mm	
Side Hung	12 inch	18kg	600mm	1200mm	80º	HIN52612EC	HIN52712EC	25 Pairs
Side Hung	16 inch	21kg	700mm	1300mm	88º	HIN52616EC	HIN52716EC	25 Pairs

Cotswold
Architectural Products

Sinidex Standard Friction Hinges

BBA Approved

10 YEAR GUARANTEE

- BBA approved, conforms to BS 6375 parts 1 & 2 proven to a lifetime 30,000 cycle guarantee
- Corrosion resistant to BS 7479, manufactured using ferritic 430 stainless steel
- Salt spray tested to 240 hours grade 4 BS EN 1670
- 18mm track width
- 10 year guarantee

Standard friction hinges
10” shown

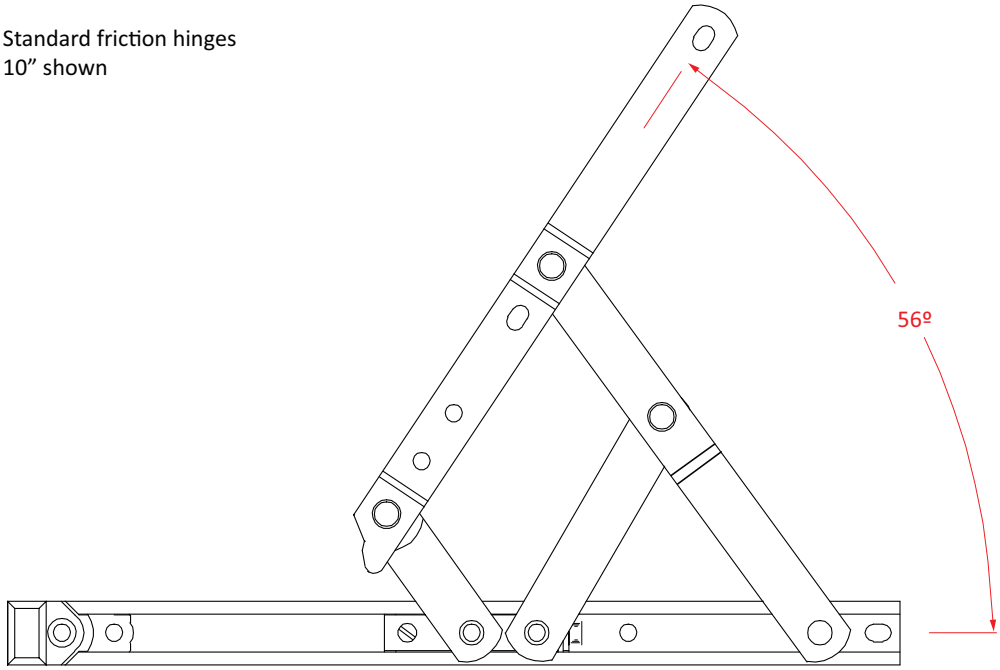

TYPE	SIZE	MAX VENT			OPENING ANGLE	STACK HEIGHT		BOX QTY.
		WEIGHT	WIDTH	HEIGHT		13mm	17mm	
Top Hung	8 inch	10kg	1200mm	300mm	62º	HIN06108	HIN07108	50 Pairs
Top Hung	10 inch	16kg	1200mm	450mm	56º	HIN06110	HIN07110	50 Pairs
Top Hung	12 inch	21kg	1200mm	600mm	64º	HIN06112	HIN07112	25 Pairs
Top Hung	16 inch	22kg	1200mm	750mm	51º	HIN06116	HIN07116	25 Pairs
Top Hung	20 inch	24kg	1200mm	900mm	42º	HIN06120	HIN07120	25 Pairs
Top Hung	24 inch	50kg	1200mm	1500mm	38º	HIN06124	HIN07124	25 Pairs
Side Hung	12 inch	20kg	650mm	1250mm	60º	HIN06212	HIN07212	25 Pairs
Side Hung	16 inch	26kg	700mm	1300mm	51º	HIN06216	HIN07216	25 Pairs

10 YEAR GUARANTEE

BBA Approved

Sinidex Restricted Friction Hinges

Cotswold Architectural Products

- BBA approved friction stay range assessment no. 50151B
- Tested to BS 6375 part 2 1987 to withstand a force of 600N when opened at the restricted position
- Restricted to 100mm opening
- Corrosion resistant to BS 7479, manufactured using ferritic 430 stainless steel
- 18mm track width
- 10 year guarantee

12” version shown

Restrictor Operation

- To release the restricted mechanism, pull the window towards you slightly, gently lift the restrictor catch and push the window open
- Pull the window fully closed to activate the automatic re-set facility

Restrictor Operation

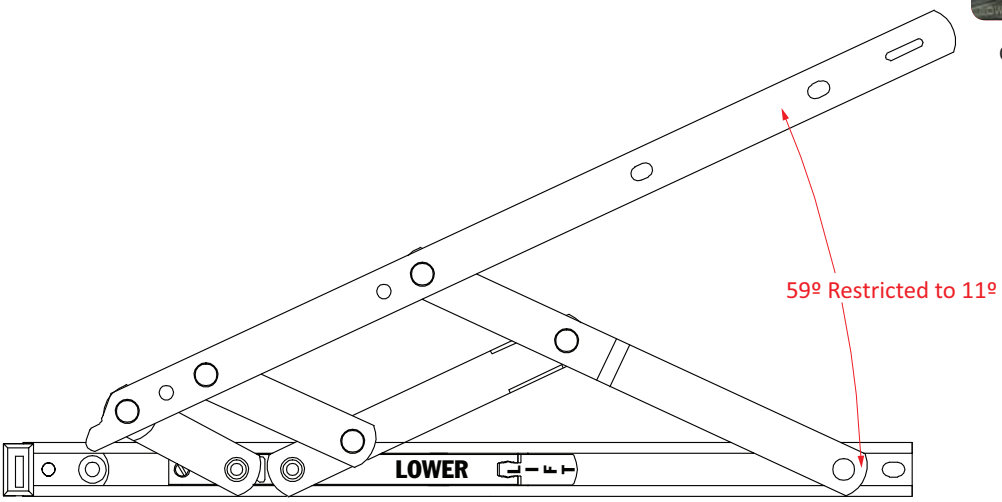

TYPE	SIZE	MAX VENT WEIGHT	MAX VENT WIDTH	MAX VENT HEIGHT	OPENING ANGLE	RESTRICTED ANGLE	13mm STACK HEIGHT LEFT HAND	13mm STACK HEIGHT RIGHT HAND	BOX QTY.
Top/Side Hung	12 inch	20kg	1200mm	600mm	59º	11º	HIN06512L	HIN06512R	50 Each
Top/Side Hung	16 inch	24kg	1200mm	750mm	48º	10º	HIN06516L	HIN06516R	50 Each
Top Hung	20 inch	24kg	1200mm	900mm	45º	8.5º	HIN06520L	HIN06520R	50 Each
Top Hung	24 inch	32kg	1200mm	1200mm	45º	7.6º	HIN06524L	HIN06524R	50 Each
							17mm STACK HEIGHT		
Top/Side Hung	12 inch	20kg	1200mm	600mm	59º	11º	HIN07512L	HIN07512R	50 Each
Top/Side Hung	16 inch	24kg	1200mm	750mm	48º	10º	HIN07516L	HIN07516R	50 Each
Top Hung	20 inch	24kg	1200mm	900mm	45º	8.5º	HIN07520L	HIN07520R	50 Each
Top Hung	24 inch	32kg	1200mm	1200mm	45º	7.6º	HIN07524L	HIN07524R	50 Each

Cotswold
Architectural Products

Sinidex Egress Only Friction Hinges

BBA Approved

10 YEAR GUARANTEE

- BBA approved friction stay range assessment no. 50151B
- Corrosion resistant to BS 7479, manufactured using ferritic 430 stainless steel
- Egress versions open to 85º (10'') or 90º (16'') providing clear egress in excess of 500mm on a 600mm wide vent
- 18mm track width
- 10 year guarantee

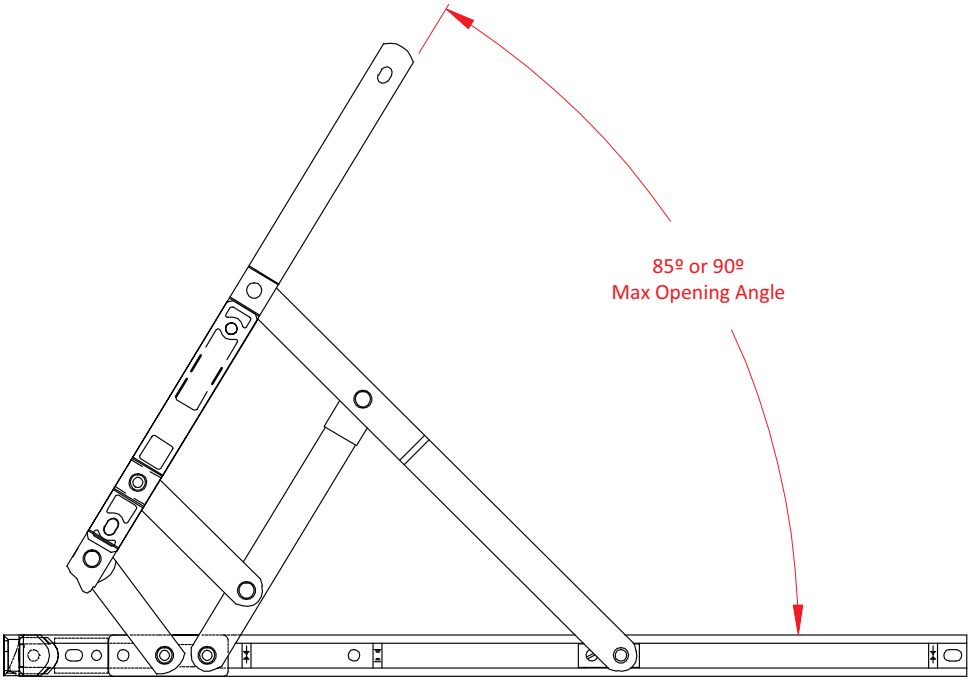

TYPE	SIZE	MAX VENT			OPENING	STACK HEIGHT		BOX QTY.
		WEIGHT	WIDTH	HEIGHT	ANGLE	13mm	17mm	
Side Hung	10 inch	21kg	600mm	1200mm	85º	HIN06410	HIN07410	50 Pairs
Side Hung	16 inch	21kg	600mm	1200mm	90º	HIN06416	HIN07416	25 Pairs

10 YEAR GUARANTEE

BBA Approved

Sinidex Egress Easy Clean Friction Hinges

Cotswold Architectural Products

- BBA approved friction stay range assessment no. 50151B
- Corrosion resistant to BS 7479, manufactured using ferritic 430 stainless steel
- Egress versions open to 85º (12'') or 90º (16'') providing clear egress in excess of 500mm on a 600mm wide vent
- 18mm track width
- 10 year guarantee

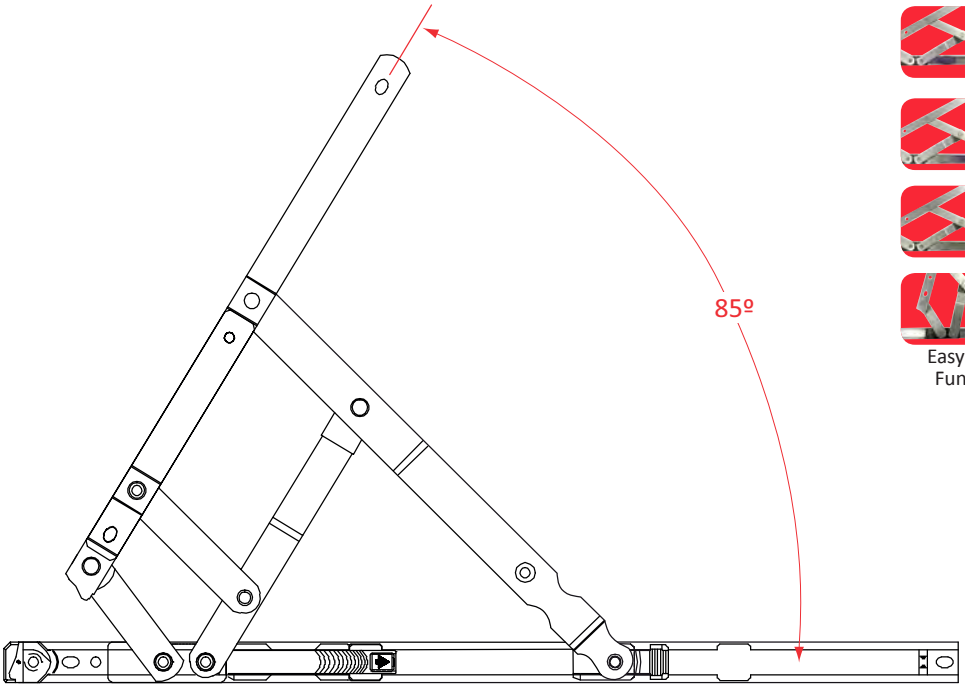

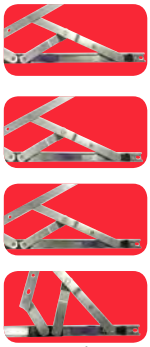

Easy Clean Function

TYPE	SIZE	MAX VENT			OPENING ANGLE	STACK HEIGHT		BOX QTY.
		WEIGHT	WIDTH	HEIGHT		13mm	17mm	
Side Hung	12 inch	21kg	600mm	1200mm	80º	HIN06412EC	HIN07412EC	50 Pairs
Side Hung	16 inch	21kg	600mm	1200mm	84º	HIN06416EC	HIN07416EC	25 Pairs

Cotswold Architectural Products

Sinidex Egress Easy Clean Extreme Friction Hinges

10 YEAR GUARANTEE

BBA Approved

Suitable for triple glazing

- BBA approved friction stay range assessment no. 50151B
- Corrosion resistant to BS 7479
- Increased weight carrying capabilities on both 12” (30kg) & 16” (35kg) hinges
- Patented operation using purple slider to achieve easy clean function
- 18mm track width
- 10 year guarantee

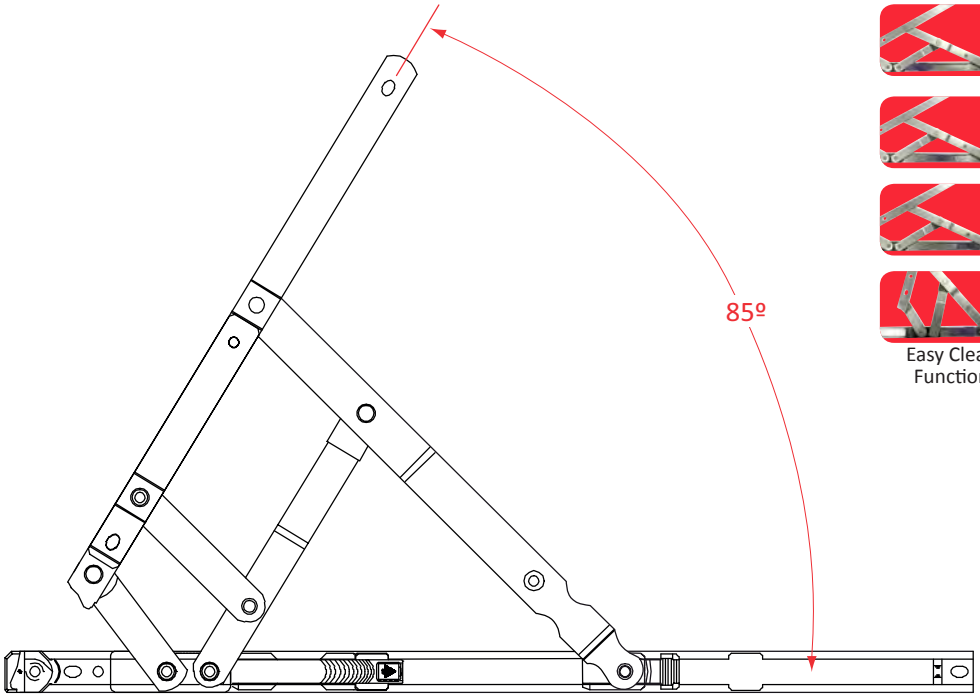

Easy Clean Function

TYPE	SIZE	MAX VENT		OPENING ANGLE	STACK HEIGHT		BOX QTY.
		WEIGHT	WIDTH		13mm	17mm	
Side Hung	12 inch	30kg	700mm	85º	HIN06412ECEX	HIN07412ECEX	25 Pairs
Side Hung	16 Inch	35kg	800mm	85º	HIN06416ECEX	HIN07416ECEX	25 Pairs

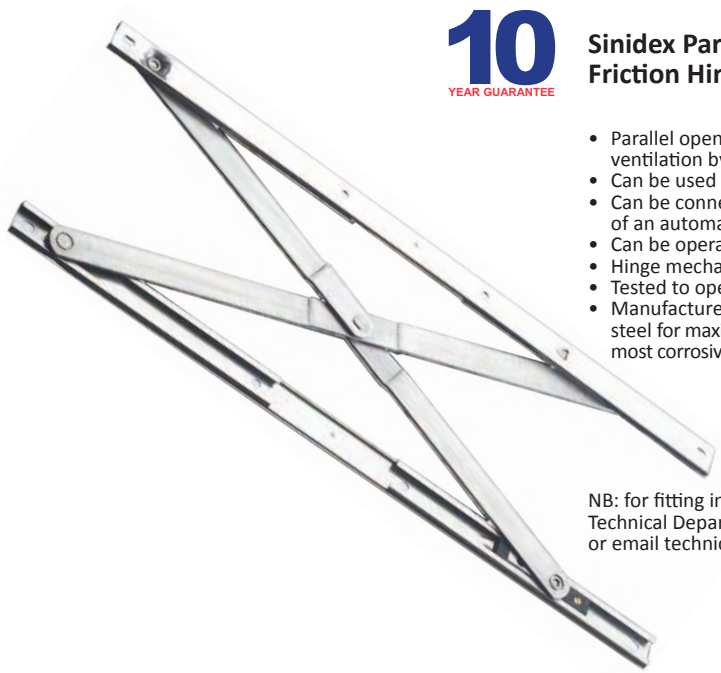

10 YEAR GUARANTEE

Sinidex Parallel Friction Hinges

Cotswold Architectural Products

- Parallel opening windows provide ultimate natural ventilation by allowing air flow around the entire opening
- Can be used for smoke evacuation vents
- Can be connected to a building management system as part of an automated solution for climate control
- Can be operated manually or using electric actuators
- Hinge mechanism is fully concealed when sash is closed
- Tested to operate for 25,000 cycles
- Manufactured from high grade austenitic stainless steel for maximum performance even in the most corrosive environments
- Recommend minimum of 4 parallel stays per window
- 18mm track width
- 10 year guarantee

NB: for fitting instructions, please contact our Technical Department on 01234 242738 or email technical@windowware.co.uk

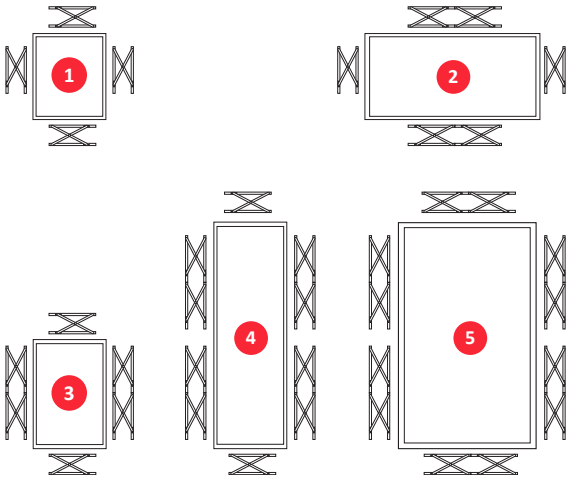

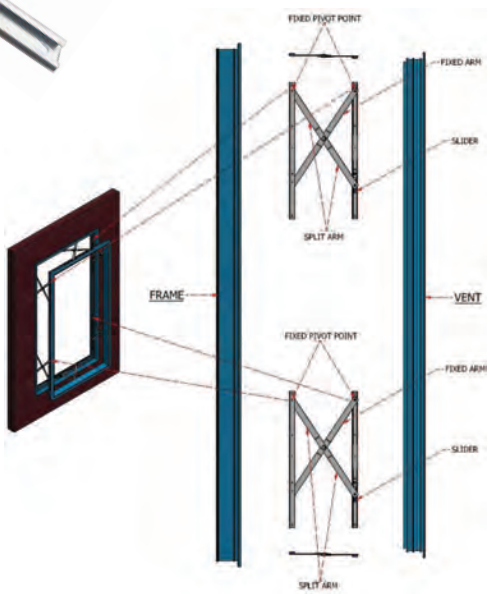

TYPE	VENT WIDTH	NO. OF HINGES	VENT HEIGHT	NO. OF HINGES	MAX VENT WEIGHT	NO. OF HANDLES SIDE	OR BOTTOM
1 Standard	500-970mm	1 Pair	750-970mm	1 Pair	100kg	2	1
2 Dual	1250-2000mm	2 Pairs	750-970mm	1 Pair	100kg	2	-
3 Dual	500-970mm	1 Pair	970-1250mm	2 Pairs	200kg	2	1
4 Dual	500-970mm	1 Pair	2000-3000mm	4 Pairs	200kg	2	-
5 Dual	1250-2000mm	2 Pairs	2000-3000mm	4 Pairs	200kg	2 (Wide Motorised Operation Only)	

TYPE	SIZE	MAX VENT WEIGHT	MAX VENT WIDTH	MAX VENT HEIGHT	OPENING DISTANCE	OPENING STACK HEIGHT	PART CODE	BOX QTY.
Parallel	11 inch	25kg	350mm	750mm	107mm	17mm	HIN07611	25 Pairs
Parallel	18 inch	100kg	1125mm	1680mm	180mm	17mm	HIN07618	25 Pairs
Parallel	36 inch	200kg	2000mm	2000mm	180mm	17mm	HIN07636	10 Pairs

Yale Standard Friction Hinges

- Excellent weather sealing and draught proofing performance from the extended enclosed end cap and asymmetrical vent arm
- Lipped slider for enhanced smooth operation
- Available in 13 and 17mm stack heights to suit top and side hung applications
- 18mm track width
- 10 year mechanical guarantee

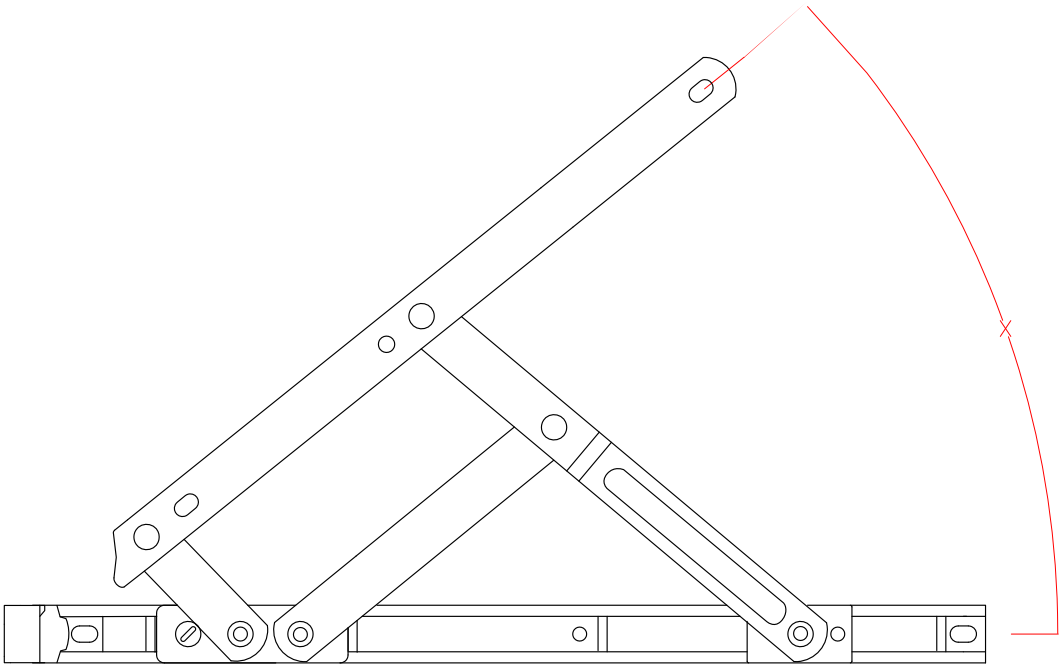

TYPE	SIZE	MAX VENT WEIGHT	MAX VENT WIDTH	MAX VENT HEIGHT	OPENING ANGLE	STACK HEIGHT 13mm	STACK HEIGHT 16mm	BOX QTY.
Top Hung	8 inch	12kg	-	350mm	64º	YFH41208	YFH41408	25 Pairs
Top Hung	10 inch	16kg	-	400mm	58º	YFH41210	YFH41410	25 Pairs
Top Hung	16 inch	21kg	-	780mm	52º	YFH41216	YFH41416	25 Pairs
Top Hung	20 inch	25kg	-	1000mm	42º	YFH41220	YFH41420	25 Pairs
Top Hung	24 inch	35kg	-	1200mm	38º	YFH41224	YFH41424	25 Pairs
Side Hung	16 inch	24kg	700mm	-	60º	YFH42216	YFH42416	25 Pairs
Top/Side Hung	12 inch	22kg	600mm	-	60º	YFH42212U	YFH42412U	25 Pairs

BBA Approved

10 YEAR GUARANTEE MECHANICAL

Yale Egress Friction Hinges

- Excellent weather sealing and draught proofing performance from the extended enclosed end cap and asymmetrical vent arm
- Lipped slider for enhanced smooth operation
- Available in 13, 16 and 17mm stack heights to suit side hung applications only
- 18mm track width
- 10 year mechanical guarantee

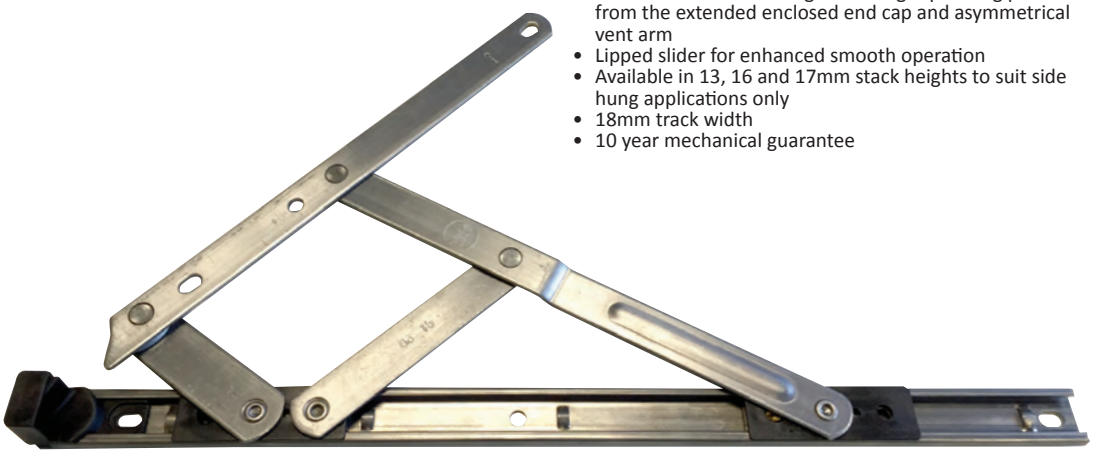

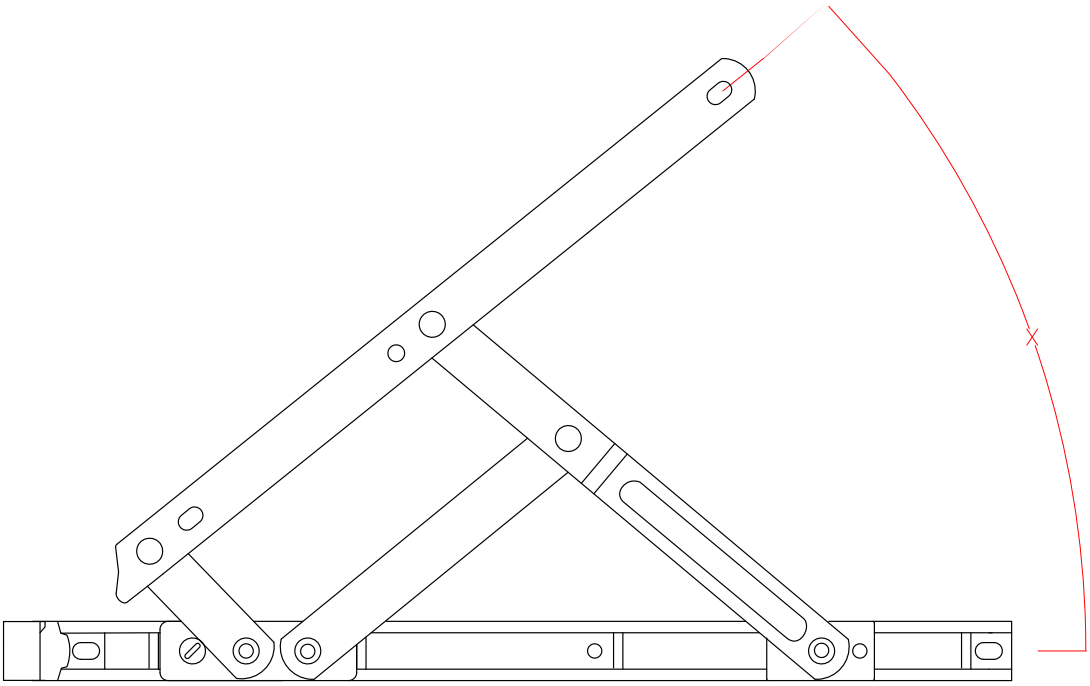

TYPE	SIZE	MAX VENT		OPENING ANGLE	STACK HEIGHT			BOX QTY.
		WEIGHT	WIDTH		13mm	16mm	17mm	
Side Hung	12 inch	22kg	600mm	86º	YFH42612	YFH42812	YFH42712	25 Pairs
Side Hung	16 inch	24kg	700mm	86º	YFH42616	YFH42816	YFH42716	25 Pairs

Yale Egress Easy Clean Friction Hinges

10 YEAR GUARANTEE MECHANICAL

BBA Approved

- Compatible with PCVu, timber and aluminium windows
- Available hinge sizes: 12” and 16”
- Available stack heights: 13mm & 16mm
- Slider with friction
- Button release the hinge mechanism to open the window to easy-clean position
- Made from ferritic stainless steel

Guarantees and certifications
- Endurance tested to 20,000 cycles
- Corrosion tested to 96 hours BS EN 1670 Grade 3
- Tested to BS 6375 parts 1 and 2 for window performance
- Secured by Design compliant when fitted with hinge protector
- Included in the Yale Lifetime Security Guarantee – Ts&Cs apply

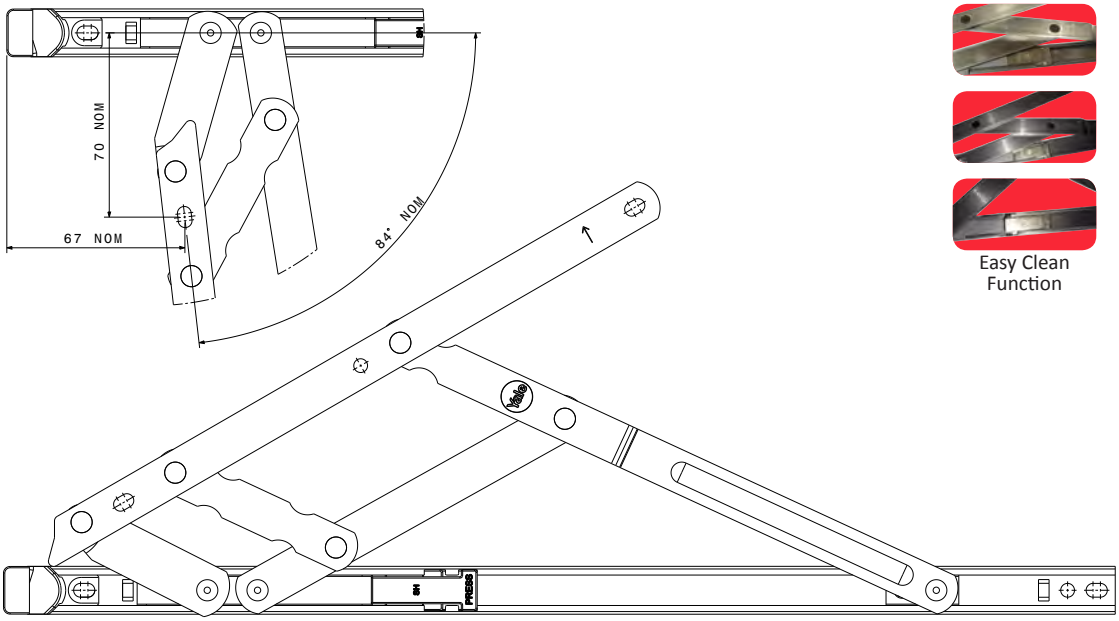

Easy Clean Function

TYPE	SIZE	MAX VENT		OPENING ANGLE	STACK HEIGHT		BOX QTY.
		WEIGHT	WIDTH		13mm	16mm	
Side Hung	12 inch	22kg	600mm	81º	YFH42612EC	YFH42812EC	25 Pairs
Side Hung	16 inch	24kg	700mm	84º	YFH42616EC	YFH42816EC	25 Pairs

BBA Approved

10 YEAR GUARANTEE

Defender Friction Hinge

securistyle

- A foolproof locating system for reliable, accurate closure
- Effective weather proofing and draught proofing
- Smooth operation
- 18mm track width
- 10 year mechnical guarantee

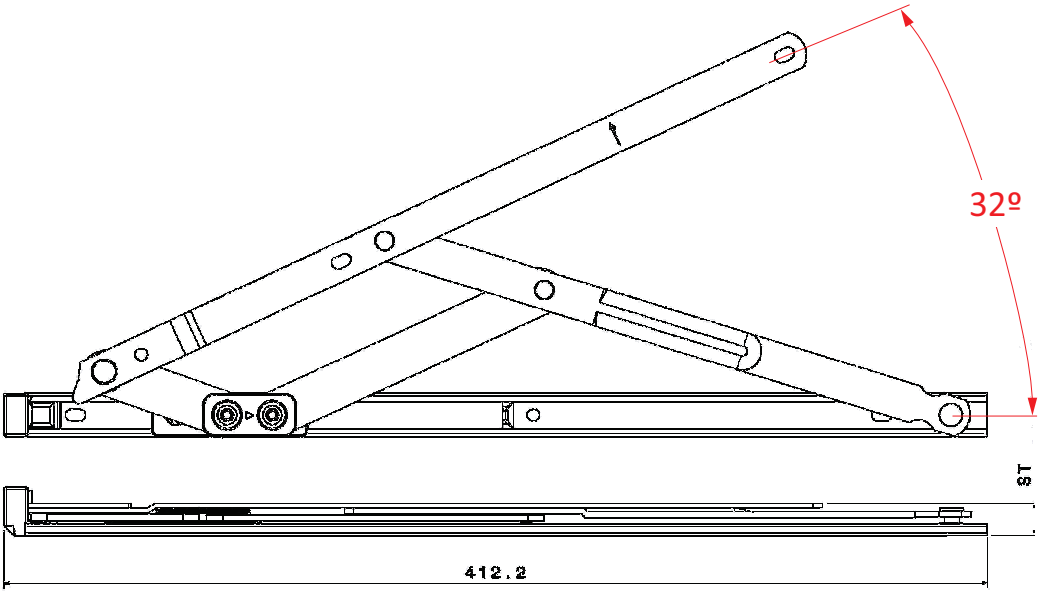

TYPE	SIZE	MAX VENT			OPENING ANGLE	STACK HEIGHT		BOX QTY.
		WEIGHT	WIDTH	HEIGHT		13mm	17mm	
Top Hung	6 inch	10kg	300mm	150mm	50º	HIN81206	-	50 Pairs
Top Hung	8 inch	12kg	350mm	200mm	50º	HIN81208	HIN81408	25 Pairs
Top Hung	10 inch	16kg	400mm	275mm	80º	HIN81210	HIN81410	25 Pairs
Top Hung	12 inch	20kg	550mm	350mm	80º	HIN81212	HIN81412	25 Pairs
Top Hung	16 inch	21kg	750mm	500mm	80º	HIN81216	HIN81416	25 Pairs
Top Hung	20 inch	24kg	1000mm	700mm	50º	HIN81220	HIN81420	25 Pairs
Top Hung	24 inch	35kg	1200mm	850mm	37.5º	HIN81224	HIN81424	25 Pairs
Side Hung	12 inch	22kg	600mm	300mm	60º	HIN82212	HIN82412	25 Pairs
Side Hung	16 inch	24kg	700mm	400mm	60º	HIN82216	HIN82416	25 Pairs

Defender Restricted Friction Hinge

10 YEAR GUARANTEE

BBA Approved

- Built-in child-resistant mechanism limits opening to a maximum of 100mm in the restricted position
- Tested to BS 6375 to withstand a force of 600N when opened to its restricted position
- Built in quick release levers allow window to be fully opened for easy cleaning, total ventilation or emergency escape
- Restrictor mechanism automatically relocates and resets as the window is closed
- On side hung applications, only the bottom restrictor hinge needs fitting to satisfy the requirements of BS 6375 Part 2
- 18mm track width
- 10 year mechnical guarantee

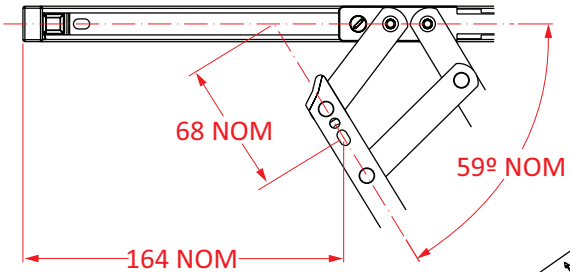

Hinge Project Out Dimension

Restrictor Operation

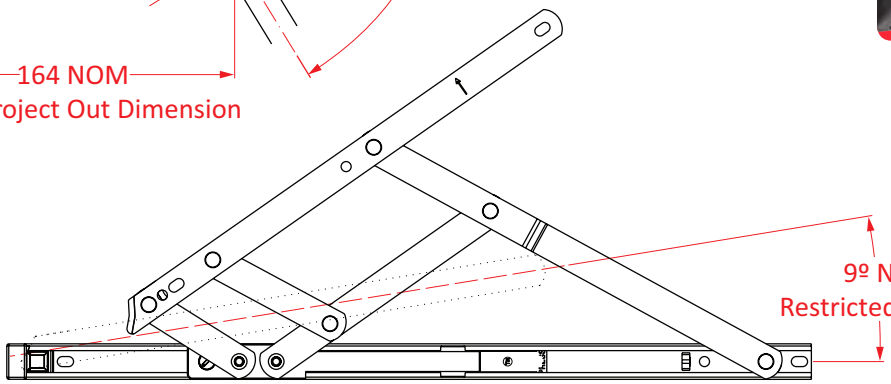

TYPE	SIZE	MAX VENT			OPENING	RESTRICTED	STACK HEIGHT		BOX QTY.
		WEIGHT	WIDTH	HEIGHT	ANGLE	ANGLE	13mm	17mm	
Top Hung	12 inch	20kg	550mm	350mm	65º	15º	HIN81812	HIN81812H	25 Pairs
Top Hung	16 inch	21kg	750mm	500mm	60º	10º	HIN81816	HIN81816H	25 Pairs
Top Hung	20 inch	24kg	1000mm	700mm	50º	8º	HIN81820	HIN81820H	25 Pairs
Top Hung	24 inch	35kg	1200mm	850mm	37.5º	7º	HIN81824	HIN81824H	25 Pairs
Side Hung - LH	12 inch	22kg	600mm	300mm	60º	13º	HIN82812	HIN82812H	50 Each
Side Hung - RH	12 inch	22kg	600mm	300mm	60º	13º	HIN83812	HIN83812H	50 Each
Side Hung - LH	16 inch	24kg	700mm	400mm	60º	12º	HIN82816	HIN82816H	50 Each
Side Hung - RH	16 inch	24kg	700mm	400mm	60º	12º	HIN83816	HIN83816H	50 Each
Side Hung	16 inch	24kg	700mm	400mm	60º	12º	-	HIN84816H	25 Pairs
Side Hung	16 inch	24kg	700mm	400mm	60º	12º	-	HIN85816H	25 Pairs

BBA Approved

10 YEAR GUARANTEE

Defender Egress Easy Clean Friction Hinge

securistyle

- Unique controllable friction device negates need for a peg stay to hold the window open
- Unique locating system for reliable closing
- Built-in second slider – invisible when the window is closed – enables easy cleaning at the press of a lever
- 18mm track width
- 10 year mechnical guarantee

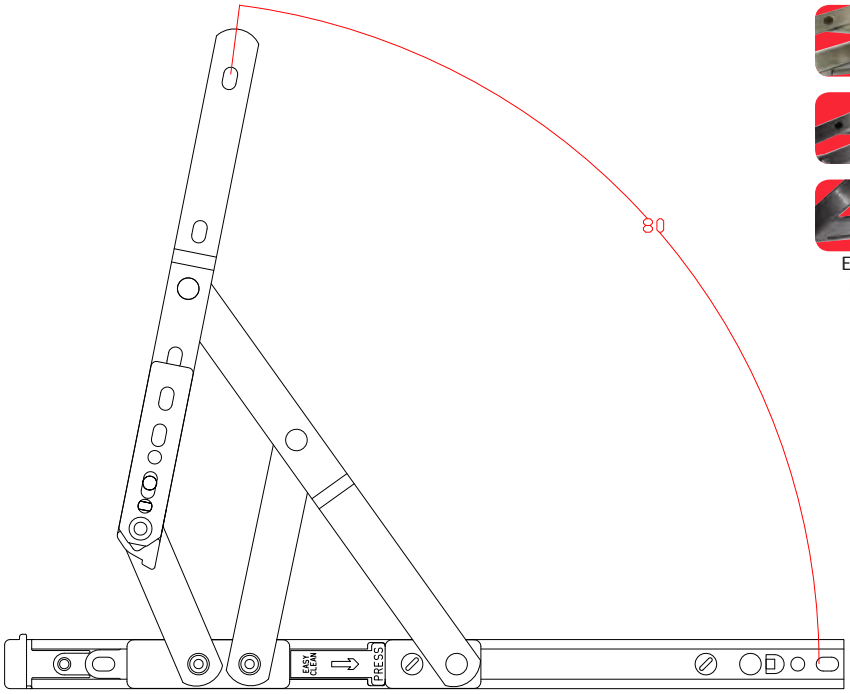

Easy Clean Function

TYPE	SIZE	MAX VENT			OPENING	STACK HEIGHT			BOX QTY.
		WEIGHT	WIDTH	HEIGHT	ANGLE	13mm	16mm	17mm	
Side Hung	12 inch	22kg	300mm	600mm	80º	HIN82712	HIN82712G	HIN82712H	25 Pairs
Side Hung	16 inch	24kg	400mm	700mm	90º	HIN82716	HIN82716G	HIN82716H	25 Pairs

Defender Plus Friction Hinges

10 YEAR GUARANTEE

Suitable for triple glazing

- Ideal for triple glaze applications
- Suitable for large and heavy window vents of up to 50kg
- Available in 16” side hung and 24” top hung
- Asymmetric location system for improved weather sealing and draught proofing
- Available from stock in austenitic finish
- Tested to 30,000 opening cycles
- Adjustable friction slider
- 18mm track width
- 10 year mechnical guarantee

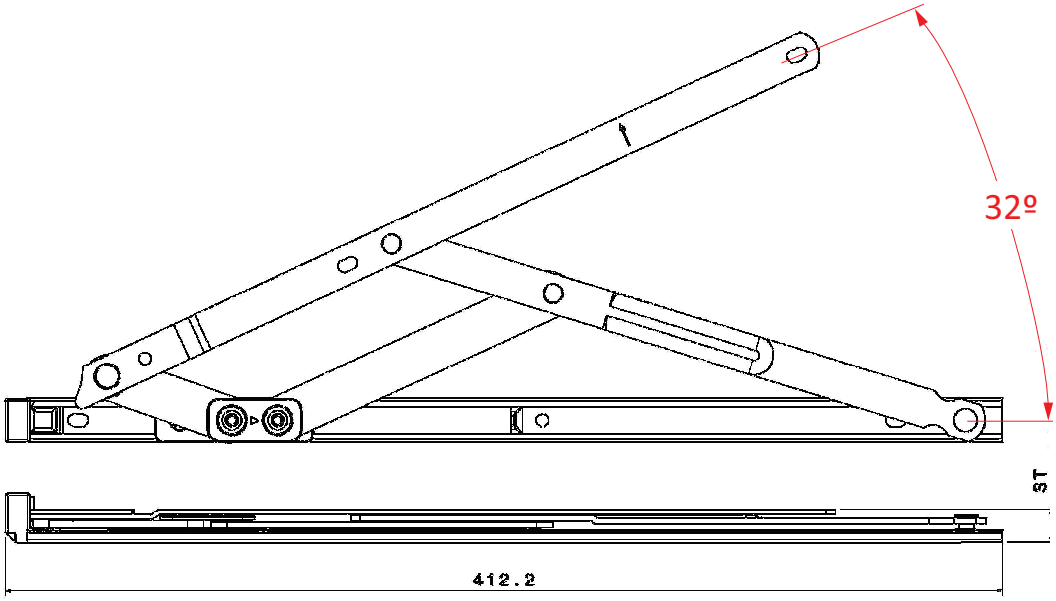

TYPE	SIZE	MAX VENT			OPENING	STACK HEIGHT		BOX QTY.
		WEIGHT	WIDTH	HEIGHT	ANGLE	13mm	17mm	
Top Hung	24 inch	50kg	-	1500mm	32º	HIN81224P	HIN81424P	25 Pairs
Side Hung	16 Inch	40kg	1000mm	-	60º	HIN82216P	HIN82416P	25 Pairs

Suitable for triple glazing

10 YEARS

Mega Egress Easy Clean Friction Hinge

TROJAN ...The Strength of Hardware Design

- Good for triple glazed application
- Suitable for all side hung applications
- Maximum weight load 40kg
- Due to its superior integral strength, one hinge covers all frame widths up to 900mm
- 18mm track width
- 10 year mechanical guarantee

Recommendations:

Immobilizer to be fitted to easy clean feature on sash widths above 600mm

80° restrictor to be fitted where sash would otherwise clash with wall on full opening

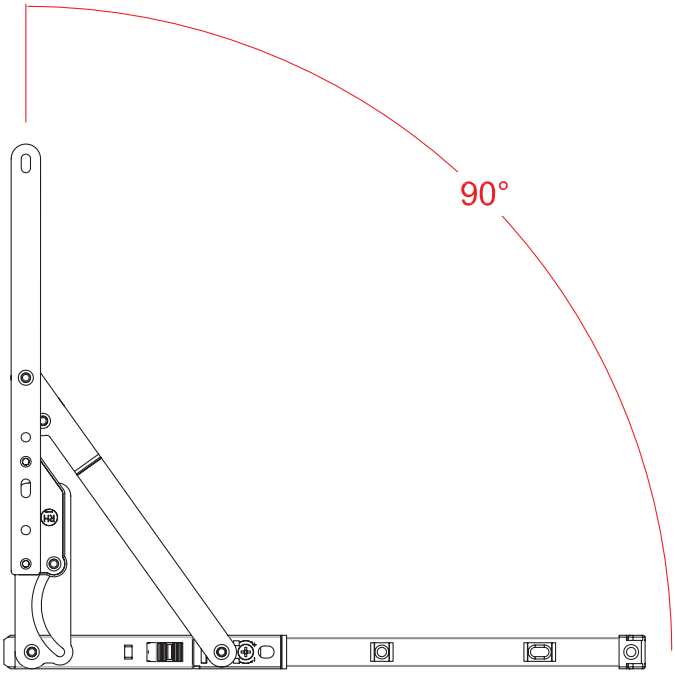

TYPE	SIZE	MAX VENT		OPENING	STACK HEIGHT		BOX QTY.
		WEIGHT	WIDTH	ANGLE	13.5mm	16.5mm	
Side Hung - Egress Only	8 inch	33kg	600mm	90º	HIN01135	HIN01165	25 Pairs
Side Hung - Egress Easy Clean	13 inch	40kg	900mm	90º	HIN00135	HIN00165	25 Pairs
						PART CODE	
Mega Egress Immobilizer	-	-	-	-	-	HIN00100	1

ID GUIDE AND OVERVIEW FOR ESPAGNOLETTE BARS & SHOOTBOLTS

Cotswold Architectural Products · KENRICK · kore · maco · TROJAN ...The Strength of Hardware Design · Yale

Eurogroove type

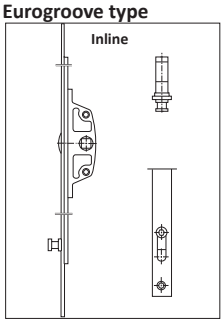

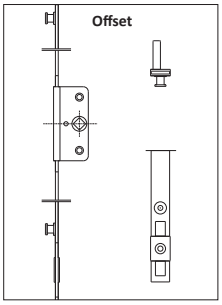

Required measurements

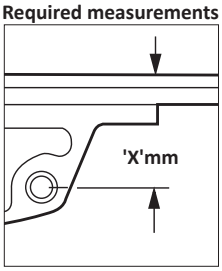

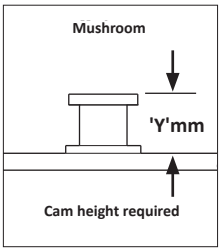

Other required information
Profile system for keeps (as they are profile specific)
Size of the window (for shootbolt bar lengths)

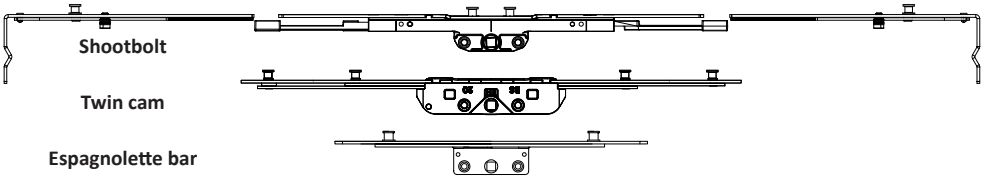

ESPAGNOLETTE TYPE	HANDING		SUITABILITY			BACKSET 'X' (mm)			SIZE (mm)	MUSHROOM HEIGHT 'Y' (mm)					SALT SPRAY HOURS	GUARANTEES			BRAND	PAGE
	OFFSET	INLINE	PVCu	TIMBER	ALUMINIUM	20	22	25		5.0	7.0	7.7	8.0	9.0		BBA	PAS 24	SBD		
Standard	•		•			•		•	310-1200			•		•	240				Maco	25
		•	•			•	•		250-120				•	•	96				Kore	26
		•	•			•	•		100-1200			•		•	360				Maco	27
Reverse		•	•			•	•		300-1200			•		•		•		•	Maco	32
		•	•			•	•		250-1200			•		•		•		•	Yale	33
Twin Cam	•				•	•			280-1300	•	•				240		•	•	Kenrick	30-31
Security		•	•			•	•		280-1150			•		•		•	•	•	Cotswold	28-29

SHOOTBOLT TYPE	SUITABILITY			BACKSET 'X' (mm)			SIZE (mm)	MUSHROOM HEIGHT 'Y' (mm)				SALT SPRAY HOURS	GUARANTEES			BRAND	PAGE
	PVCu	TIMBER	ALUMINIUM	20	21	22		none	ADJUSTABLE	7.7	9.0		BBA	PAS 24	SBD		
Mk1	•			•		•	320-1400	•		•	•		•		•	Maco	38
Stallion 2	•					•	300-1750		•				•		•	Trojan	45
Croppable	•			•		•	326-1420	•		•	•		•		•	Yale	34
	•			•		•	320-600	•		•	•	480		•		Maco	39
Fast Fit	•			•		•	476-1520	•		•	•		•		•	Yale	35
MkV Telescopic/ Croppable	•	•	•	•	•	•	500-1500			•	•	480		•		Maco	40

Offset Mushroom Espagnolette Bar

- Offset espagnolette bar designed for profiles without a eurogroove
- Adjustable mushroom cams with 19mm cam travel
- 240 hours salt spray corrosion resistance

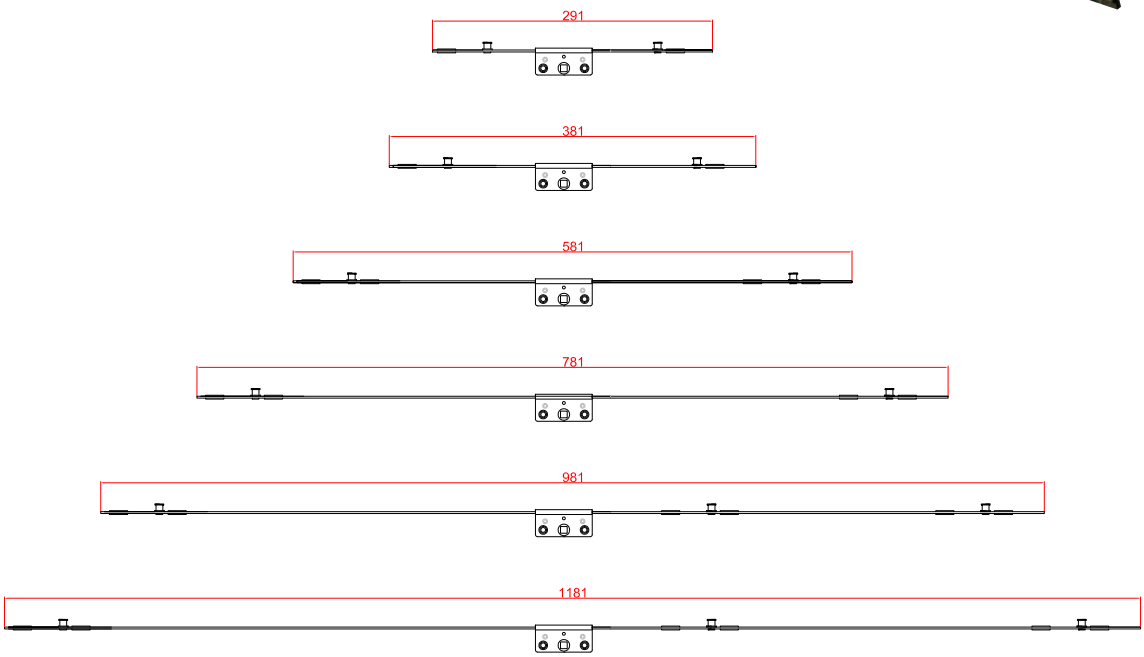

Please contact our sales department for a keep to suit your profile

SIZE	BACKSET	MUSHROOM HEIGHT 7.7mm	MUSHROOM HEIGHT 9mm	NUMBER OF KEEPS REQUIRED	BOX QTY.
310mm	20mm	MAC57151	MAC57157	2 per lock	20
400mm	20mm	MAC57152	MAC57158	2 per lock	20
600mm	20mm	MAC57153	MAC57159	2 per lock	20
800mm	20mm	MAC57154	MAC57160	2 per lock	20
1000mm	20mm	MAC57155	MAC57161	3 per lock	20
1200mm	20mm	MAC57156	MAC57162	3 per lock	20
310mm	25mm	MAC57163	-	2 per lock	20
400mm	25mm	MAC57164	-	2 per lock	20
600mm	25mm	MAC57165	-	2 per lock	20
800mm	25mm	MAC57166	-	2 per lock	20
1000mm	25mm	MAC57167	-	3 per lock	20
1200mm	25mm	MAC57168	-	3 per lock	20

Inline Espagnolette Bar

CORROSION 10 year GUARANTEE

- Fits standard and reduced depth eurogrooves
- Option of 20 or 22mm backset
- 8 or 9mm mushroom cams with 16mm travel
- Faceplate in steel, gearbox in diecast zinc
- Tested to 20,000 operations
- Tested to 96 hours salt spray

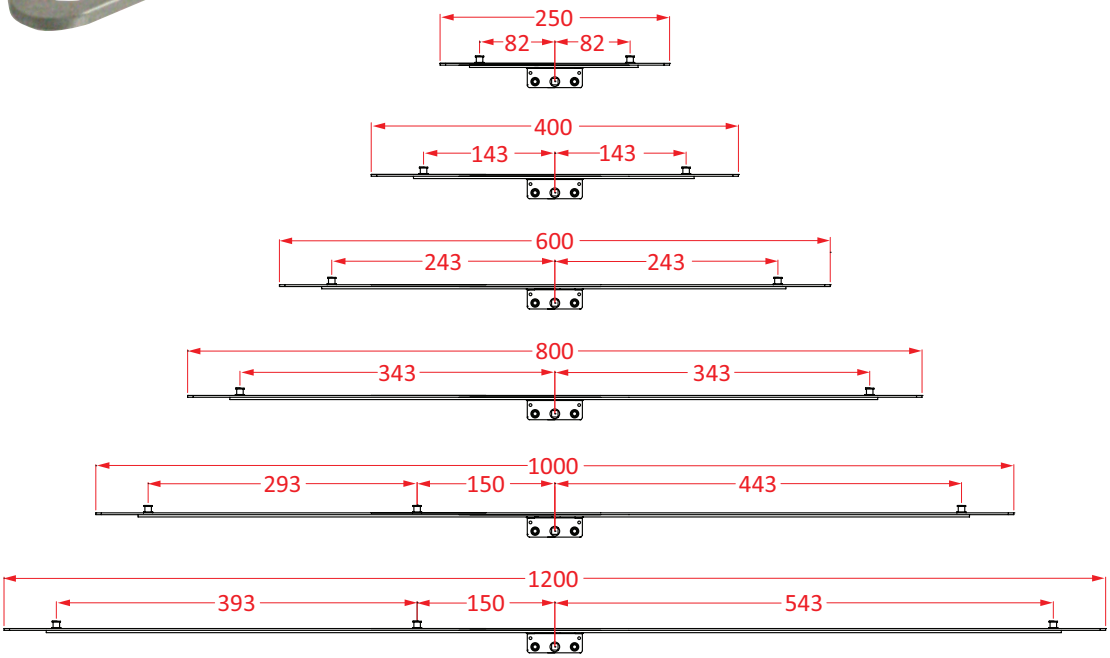

SIZE	BACKSET	MUSHROOM HEIGHT 8mm	MUSHROOM HEIGHT 9mm	NUMBER OF KEEPS REQUIRED	BOX QTY.
250mm	20mm	ESPB40502	ESPB40582	2 per lock	20
400mm	20mm	ESPB40504	ESPB40584	2 per lock	20
600mm	20mm	ESPB40506	ESPB40586	2 per lock	20
800mm	20mm	ESPB40508	ESPB40588	2 per lock	20
1000mm	20mm	ESPB40510	ESPB40590	3 per lock	20
1200mm	20mm	ESPB40512	ESPB40592	3 per lock	20
250mm	22mm	ESPB40802	ESPB40882	2 per lock	20
400mm	22mm	ESPB40804	ESPB40884	2 per lock	20
600mm	22mm	ESPB40806	ESPB40886	2 per lock	20
800mm	22mm	ESPB40808	ESPB40888	2 per lock	20
1000mm	22mm	ESPB40810	ESPB40890	3 per lock	20
1200mm	22mm	ESPB40812	ESPB40892	3 per lock	20

Please contact our sales department for a keep to suit your profile

Inline Espagnolette Bar

- Inline eurogroove fitting espagnolette bar
- Profile related keep with nightvent position available separately for most profiles
- Adjustable mushroom cams
- 19mm cam travel
- 360 hours salt spray corrosion resistance

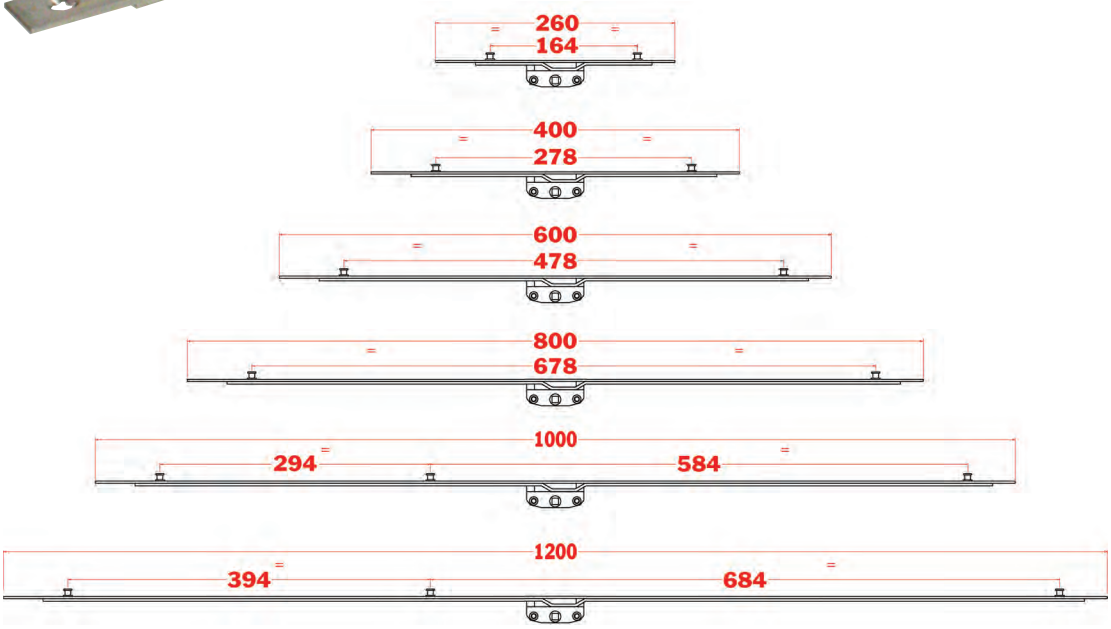

SIZE	BACKSET	MUSHROOM HEIGHT 7.7mm	MUSHROOM HEIGHT 9mm	NUMBER OF KEEPS REQUIRED	BOX QTY.
100mm	20mm	MAC58486	-	2 per lock	20
260mm	20mm	MAC58493	MAC58494	2 per lock	20
400mm	20mm	MAC58501	MAC58502	2 per lock	20
600mm	20mm	MAC58508	MAC58509	2 per lock	20
800mm	20mm	MAC58515	MAC58516	2 per lock	20
1000mm	20mm	MAC58522	MAC58523	3 per lock	20
1200mm	20mm	MAC58528	MAC58529	3 per lock	10
250mm	22mm	MAC58496	MAC58497	2 per lock	20
400mm	22mm	MAC58504	MAC58505	2 per lock	20
600mm	22mm	MAC58511	MAC58512	2 per lock	20
800mm	22mm	MAC58518	MAC58519	2 per lock	20
1000mm	22mm	MAC58525	MAC58526	3 per lock	20
1200mm	22mm	MAC58530	MAC58531	3 per lock	20

Please contact our sales department for a keep to suit your profile

Cotswold Architectural Products

Sinidex Security Window Lock

10 YEAR GUARANTEE

BBA Approved

SBD Approved

PAS 24 PASSED

Now fabricators can quickly, easily and cost-effectively upgrade their product offering to provide their customers with high-security SBD-approved window hardware as standard thanks to this competitively-priced security window lock from Cotswold Architectural Products. Clever floating mushroom technology and self-locating keeps help to maintain trouble-free operation, as well as ensure optimal security- and weather-sealing performance even if the sash drops. That means fewer call backs and happier homeowners!

Key features

- Floating mushroom technology delivers increased tolerances to reduce gearbox wear and cope with sash drop up to 6.5mm
- Self-locating keeps guide the mushroom cams into perfect position every time for effortless operation and a secure seal
- Fully compression adjustable security cams
- Simple routing preparation – the Sinidex lock fits a standard espag rout
- Ever expanding range of profile-related handed security keeps with night vent facility
- Rods are ready marked to aid keep alignment during fabrication
- Suitable for PVCu windows

Specifications:

- 16mm plated mild steel faceplate
- 20 or 22mm back sets
- 7.7 or 9mm mushroom cams
- Compression adjustment ±1mm
- Available in various sizes from 280 to 1150mm

Guarantees & Certifications

- Secured By Design accredited to protect homes against crime
- PAS 24 accredited security performance
- Tested to over 30,000 cycles with a 10-year mechanical guarantee for long service life
- Corrosion resistant to EN1670: Grade 4

Please contact our sales department for handed keeps to suit your profile

SIZE	BACKSET	MUSHROOM HEIGHT 7.7mm	MUSHROOM HEIGHT 9mm	NUMBER OF KEEPS REQUIRED	BOX QTY.
280mm	20mm	STC2070280	STC2090280	2 per lock	16
400mm	20mm	STC2070400	STC2090400	2 per lock	16
550mm	20mm	STC2070550	STC2090550	2 per lock	16
750mm	20mm	STC2070750	STC2090750	4 per lock	16
850mm	20mm	STC2070850	STC2090850	4 per lock	16
950mm	20mm	STC2070950	STC2090950	4 per lock	16
1050mm	20mm	STC2071050	STC2091050	4 per lock	16
1150mm	20mm	STC2071150	STC2091150	4 per lock	16
280mm	22mm	STC2270280	STC2290280	2 per lock	16
400mm	22mm	STC2270400	STC2290400	2 per lock	16
550mm	22mm	STC2270550	STC2290550	2 per lock	16
750mm	22mm	STC2270750	STC2290750	4 per lock	16
850mm	22mm	STC2270850	STC2290850	4 per lock	16
950mm	22mm	STC2270950	STC2290950	4 per lock	16
1050mm	22mm	STC2271050	STC2291050	4 per lock	16
1150mm	22mm	STC2271150	STC2291150	4 per lock	16

Cotswold
Architectural Products

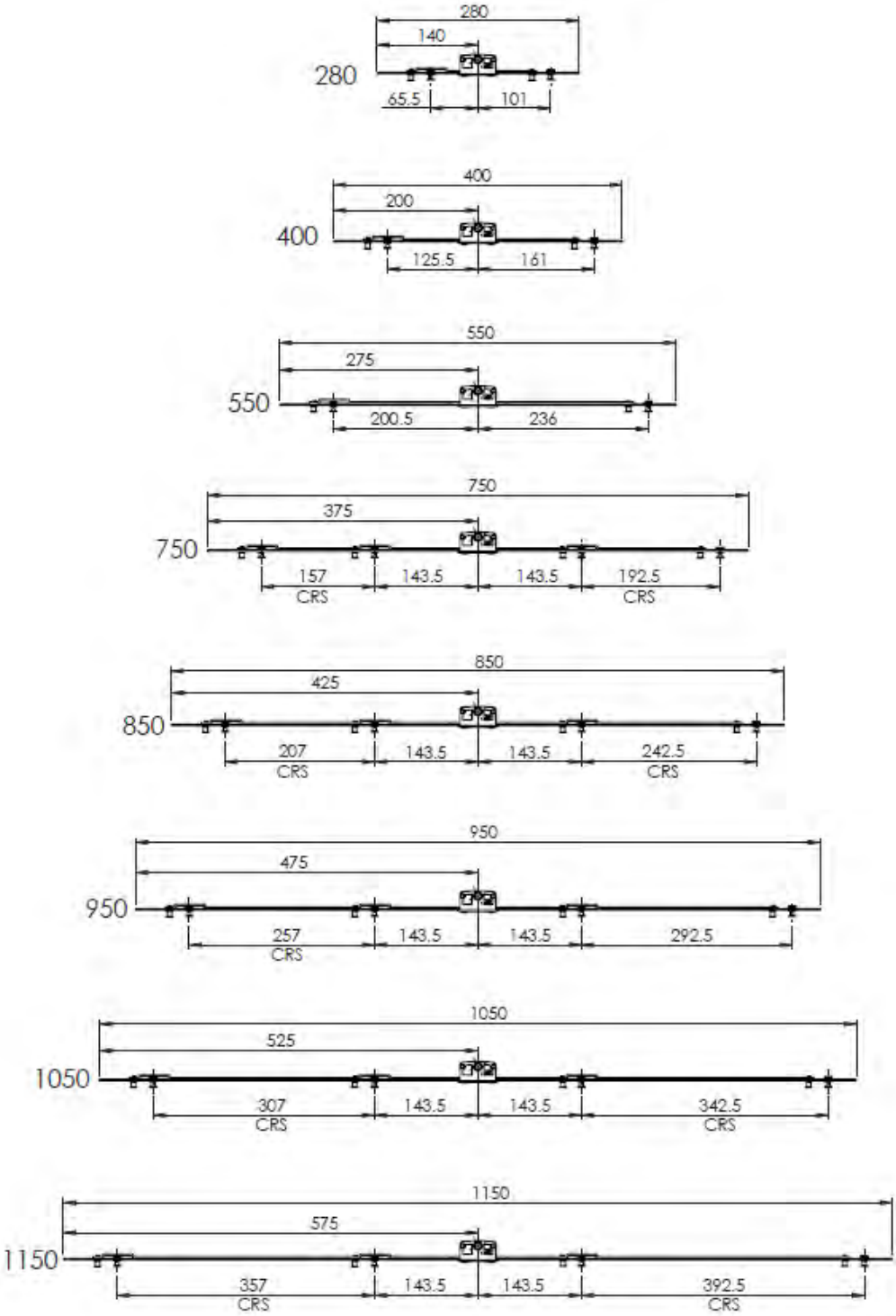

Nemesis Twin Cam Espagnolette Bar

PAS 24

SBD Approved

TS008: 2015

BS EN 1670:2007

10 YEAR MECANICAL GUARANTEE

This multi-point window lock from Kenrick fulfils fabricator demand for a high-quality locking system capable of delivering the superior performance and proven reliability fit for increasingly popular high-end aluminium windows. PAS 24:2016 and SBD accredited, the crime preventing credentials of this security window lock are second to none. It's fitter-friendly too, with a fast-fix design and adjustable mushroom cams to +/- 1mm, ensuring even compression and an optimum seal.

Key Features

- Multi-point locking system with a robust offset gearbox suitable for aluminium profiles
- High-security bi-directional twin cam
- U-Rail faceplate which also works within a eurogroove
- Available with 5 or 7mm cam heights
- Made from durable high-grade 304 austenitic stainless steel

Guarantees & Certificates

- Security tested to PAS 24: 2016 & Secured by Design certified
- Tested to 100,000 cycles with 10-year mechanical guarantee
- Corrosion resistant to BE EN 1670: 2007 Grade 4 240 hours salt spray

Handing and size stamped here (LH 400mm)

400mm

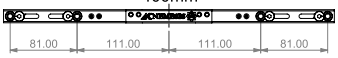

550mm

700mm

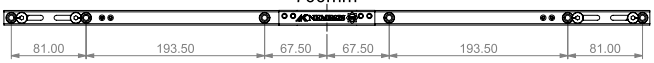

850mm

1000mm

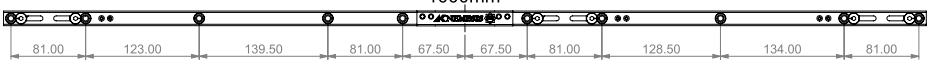

1150mm

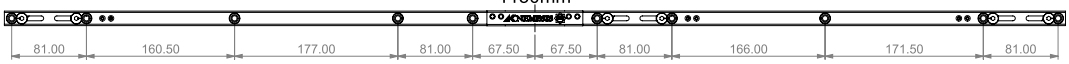

1300mm

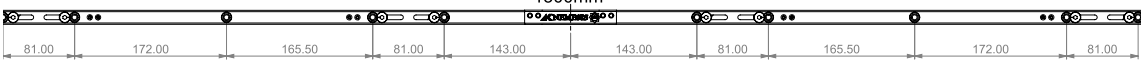

Please contact our sales department for a keep to suit your profile

SIZE	HANDING	MUSHROOM HEIGHT		NUMBER OF KEEPS REQUIRED	BOX QTY
		5mm	7mm		
280mm	Left	KNE2050280L	KNE2070280L	2 per lock	20
280mm	Right	KNE2050280R	KNE2070280R	2 per lock	20
400mm	Left	KNE2050400L	KNE2070400L	2 per lock	20
400mm	Right	KNE2050400R	KNE2070400R	2 per lock	20
550mm	Left	KNE2050550L	KNE2070550L	2 per lock	20
550mm	Right	KNE2050550R	KNE2070550R	2 per lock	20
700mm	Left	KNE2050700L	KNE2070700L	2 per lock	20
700mm	Right	KNE2050700R	KNE2070700R	2 per lock	20
850mm	Left	KNE2050850L	KNE2070850L	2 per lock	20
850mm	Right	KNE2050850R	KNE2070850R	2 per lock	20
1000mm	Left	KNE2051000L	KNE2071000L	3 per lock	20
1000mm	Right	KNE2051000R	KNE2071000R	3 per lock	20
1150mm	Left	KNE2051150L	KNE2071150L	3 per lock	20
1150mm	Right	KNE2051150R	KNE2071150R	3 per lock	20
1300mm	Left	KNE2051300L	KNE2071300L	4 per lock	20
1300mm	Right	KNE2051300R	KNE2071300R	4 per lock	20

R.A.I.L. Espagnolette Bar

BBA Approved

SBD Approved

- High security, twin cam locking mechanism with bi-directional mushroom cams
- Compatible with all eurogrooved profile systems
- BBA approved - Assessment No. 2637

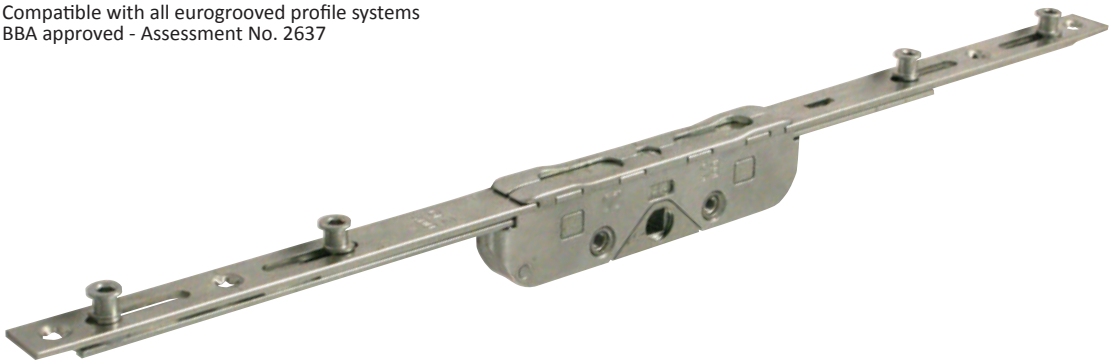

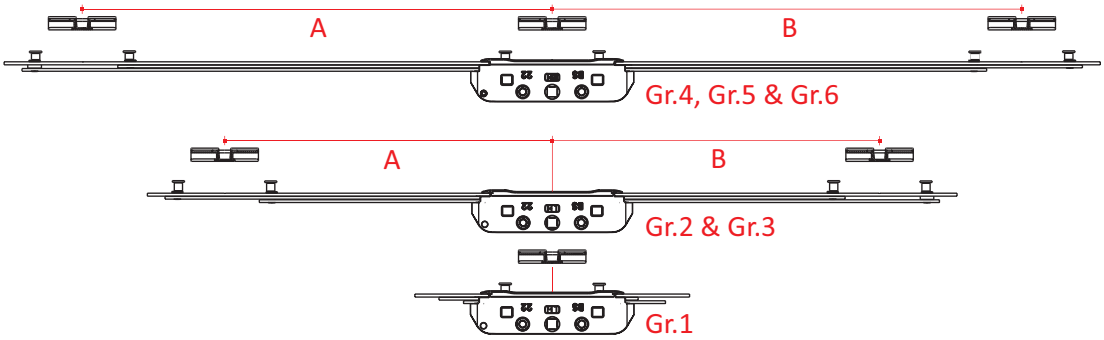

SIZE	BACKSET	MUSHROOM HEIGHTS 7.7mm	MUSHROOM HEIGHTS 9mm	NUMBER OF KEEPS REQUIRED	BOX QTY.
300mm	20mm	MAC202693	MAC202705	1 per lock	10
400mm	20mm	MAC202694	MAC202706	2 per lock	10
600mm	20mm	MAC202695	MAC202707	2 per lock	10
800mm	20mm	MAC202696	MAC202708	3 per lock	10
1000mm	20mm	MAC202697	MAC202709	3 per lock	10
1200mm	20mm	MAC202698	MAC202710	3 per lock	10
200mm	22mm	MAC202699	MAC202711	1 per lock	10
400mm	22mm	MAC202700	MAC202712	2 per lock	10
600mm	22mm	MAC202701	MAC202713	2 per lock	10
800mm	22mm	MAC202702	MAC202714	3 per lock	10
1000mm	22mm	MAC202703	MAC202715	3 per lock	10
1200mm	22mm	MAC202704	MAC202716	3 per lock	10

Please contact our sales department for a keep to suit your profile

SBD Approved

BBA Approved

10 YEAR GUARANTEE MECHANICAL

Encloser Reverse Action Espagnolette Bar

Yale®

- Secured By Design licensed locking system
- Product conforms to BS7950 requirements
- High security bi-directional mushroom cams
- 7.7 & 9mm mushroom height options
- 7 lock sizes covering 270 to 1400mm sash sizes
- BBA approved - S2/47767A

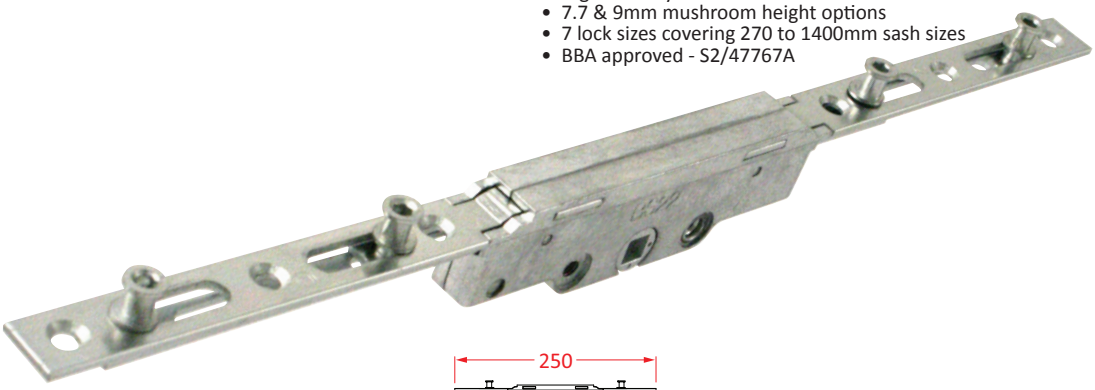

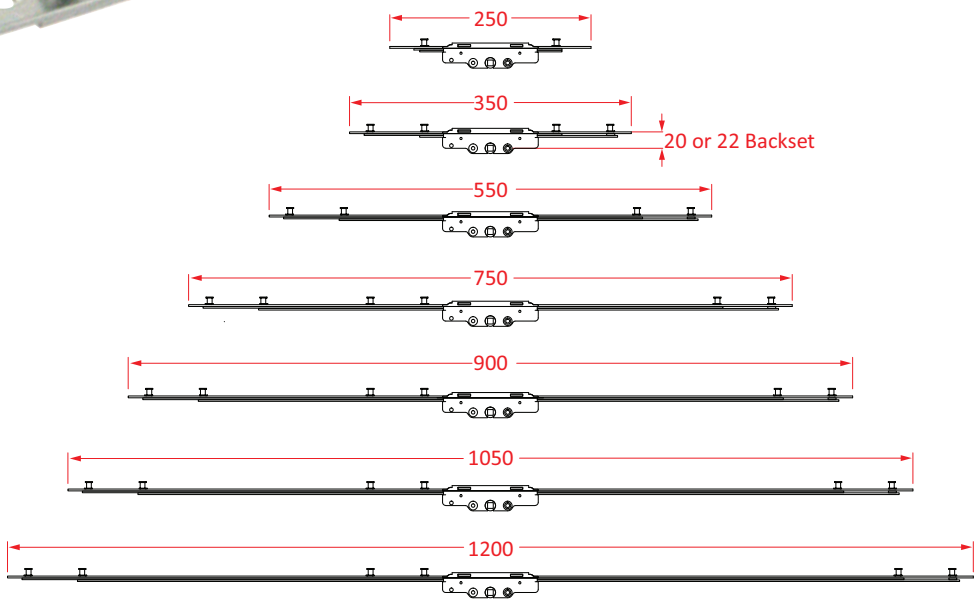

SIZE	BACKSET	MUSHROOM HEIGHTS 7.7mm	9mm	NUMBER OF KEEPS REQUIRED	BOX QTY.
250mm	20mm	YEN207712	YEN209012	2 per lock	10
350mm	20mm	YEN207724	YEN209024	2 per lock	10
550mm	20mm	YEN207734	YEN209034	2 per lock	10
750mm	20mm	YEN207748	YEN209048	3 per lock	10
900mm	20mm	YEN207758	YEN209058	3 per lock	10
1050mm	20mm	YEN207768	YEN209068	3 per lock	10
1200mm	20mm	YEN207778	YEN209078	3 per lock	10
250mm	22mm	YEN227712	YEN229012	2 per lock	10
350mm	22mm	YEN227724	YEN229024	2 per lock	10
550mm	22mm	YEN227734	YEN229034	2 per lock	10
750mm	22mm	YEN227748	YEN229048	3 per lock	10
900mm	22mm	YEN227758	YEN229058	3 per lock	10
1050mm	22mm	YEN227768	YEN229068	3 per lock	10
1200mm	22mm	YEN227778	YEN229078	3 per lock	10

Please contact our sales department for a keep to suit your profile

Croppable Shootbolt System

10 YEAR GUARANTEE MECHANICAL

BBA Approved

SBD Approved

- Combination locking technology
- Strategically positioned cams & bolts deliver optimum security
- Optimal weather proofing aided by compression adjustable cams
- Secured By Design licensed locking system
- BBA approved - S2/47767A

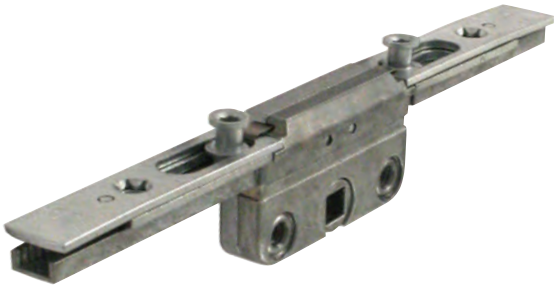

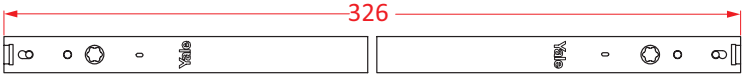

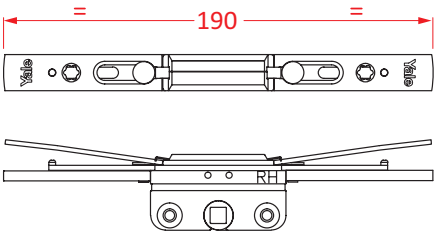

Please contact our sales department for a keep to suit your profile

Mushroom

Combi

TYPE	BACKSET	MUSHROOM HEIGHTS			NUMBER OF KEEPS REQUIRED		BOX QTY.
		NONE	7.7mm	9mm	MUSHROOM	COMBI	
Croppable	20mm	YSB20000*	YSB20772	YSB20902	2 per lock	-	40
Croppable	22mm	YSB22000*	YSB22772	YSB22902	2 per lock	-	40
ROD SIZE							
0	326– 474mm	YSB30000	-	-	-	1 per rod	40
3	368– 820mm	-	YSB37731	YSB39031	1 per rod	1 per rod	40
5	708–1120mm	-	YSB37751	YSB39051	1 per rod	1 per rod	40
7	708–1420mm	-	YSB37771	YSB39071	1 per rod	1 per rod	40

*NB: does not require mushroom keeps

SBD Approved

10 YEAR GUARANTEE MECHANICAL

BBA Approved

'Fast Fit' Shootbolt System

Yale®

- Combination locking technology
- Strategically positioned cams and bolts deliver optimum security
- Optimal weather proofing aided by compression adjustable cams
- Secured By Design licensed locking system
- BS 7950 compliant
- BBA approved - S2/47767A

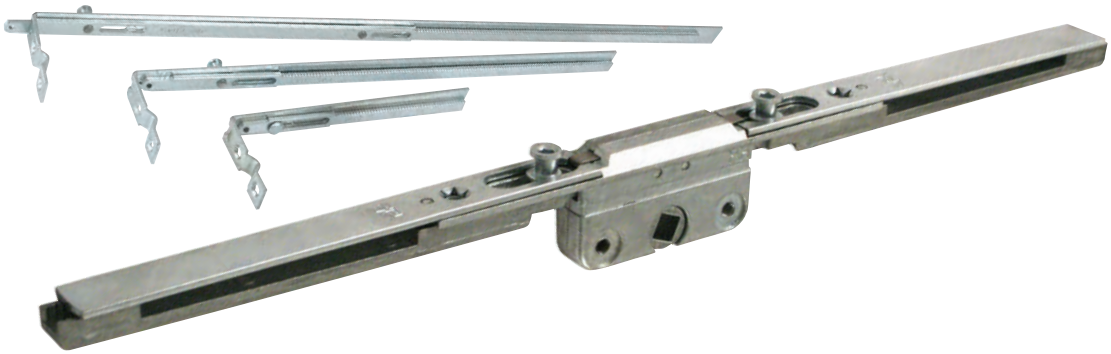

Please contact our sales department for a keep to suit your profile

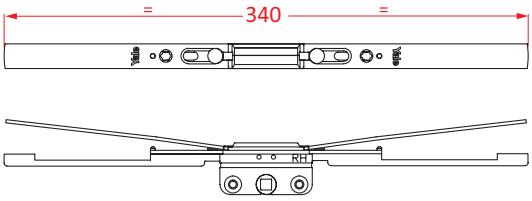

Mushroom

Combi

TYPE	BACKSET	MUSHROOM HEIGHTS			NUMBER OF KEEPS REQUIRED		BOX QTY.
		NONE	7.7mm	9mm	MUSHROOM	COMBI	
Fast Fit	20mm	-	YSB20772E	YSB20902E	2 per lock	-	40
Fast Fit	22mm	-	YSB22772E	YSB22902E	2 per lock	-	40
ROD SIZE							
0	476– 624mm	YSB30000	-	-	-	1 per rod	40
1	520– 670mm	-	YSB37711	YSB39011	1 per rod	1 per rod	40
2	670– 820mm	-	YSB37721	YSB39021	1 per rod	1 per rod	40
3	820– 970mm	-	YSB37731	YSB39031	1 per rod	1 per rod	40
4	970–1120mm	-	YSB37741	YSB39041	1 per rod	1 per rod	40
5	1120–1270mm	-	YSB37751	YSB39051	1 per rod	1 per rod	40
6	1270–1420mm	-	YSB37761	YSB39061	1 per rod	1 per rod	40
7	1420–1520mm	-	YSB37771	YSB39071	1 per rod	1 per rod	40

French Casement

- Based on the Yale Croppable Shootbolt System (see page 34 for further information)
- Combination locking technology
- Strategically positioned cams and bolts deliver optimum security
- Optimal weather proofing aided by compression adjustable cams

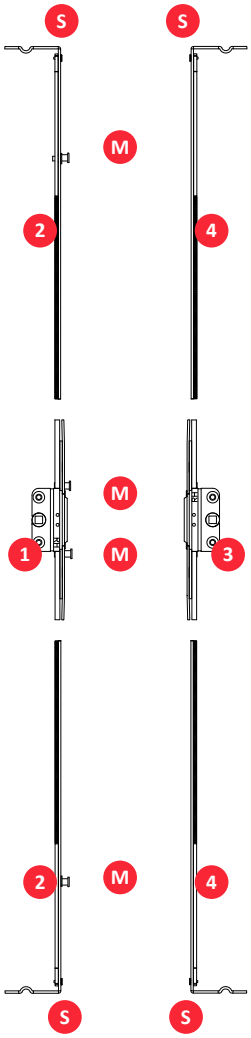

MASTER BACKSET	CAM HEIGHT NONE	7.7mm	9mm		No. OF KEEPS REQUIRED (M) USHROOM	(S) HOOTBOLT	BOX QTY.
(1) 20mm	-	YSB20772	YSB20902	-	2 per lock	-	20
22mm	-	YSB22772	YSB22902	-	2 per lock	-	20
SLAVE BACKSET							
(3) 20mm	YSB20000	-	-	-	-	-	20
22mm	YSB22000	-	-	-	-	-	20
ROD No.	(4) NONE	(2) 7.7mm	(2) 9mm	**TO SUIT SASH REBATE SIZE**			
0	YSB30000	-	-	326-474mm	0	1 per rod	40
3	YSB40030	YSB47731	YSB49031	383-820mm	1 per rod	1 per rod	40
5	YSB40050	YSB47751	YSB49051	708-1120mm	1 per rod	1 per rod	40
7	YSB40070	YSB47771	YSB49071	708-1420mm	1 per rod	1 per rod	40

LIFETIME GUARANTEE | SBD Approved | BBA Approved | 10 YEAR GUARANTEE SURFACE & MECHANICAL

Yale Flush Sash Casement Gearing

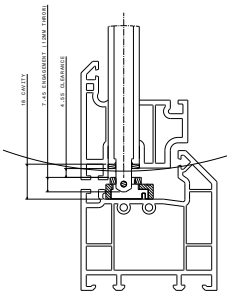

This new high-security locking hardware from Yale has been specifically designed to fit modern flush sash systems, so homeowners can achieve the elegant, traditional looks they're after with the peace of mind, performance and convenience you'd expect from the world's most trusted lock manufacturer. Made in the UK to the highest specifications and covered by Yale's Lifetime Security Guarantee, this new lock features an extra cam which allows the window to be safely and securely partially opened on a 'night vent' position for improved ventilation.

Key features and benefits:

- Suitable for most flush window systems
- Features an extra mushroom cam to **enable night vent position**
- Works with both the fast-fit and croppable gearboxes from Yale for ultimate flexibility
- Available with 7.7 or 9mm easily adjustable mushroom cams for **enhanced security and tight weather sealing**
- 20 and 22mm backsets
- Wide choice of keeps covers most profiles for **flexible usage**
- 4 crop-to-fit shootbolt sizes to achieve sash sizes 326 to 1420mm
- 7 non-croppable rod sizes to achieve sash sizes 522 to 1510mm

Specifications:

- **Excellent corrosion resistance** to EN 1670:2007 Grade 4
- Tested to a minimum of 50,000 cycles with a 10-year mechanical guarantee for assured long-life
- **Keeps families & properties safe** - Secured By Design accredited & PAS 24:2016 compliant
- **Quality assured** with BBA certification
- Made in Britain

TYPE	QTY PER KIT	BACKSET/SIZE	MUSHROOM HEIGHTS 7.7mm	MUSHROOM HEIGHTS 9mm	NUMBER OF KEEPS REQUIRED MUSHROOM	NUMBER OF KEEPS REQUIRED COMBI	BOX QTY.
1 Croppable Gearbox	1	20mm	YSB20772	YSB20902	2 per lock	-	40
1 Croppable Gearbox	1	22mm	YSB22772	YSB22902	2 per lock	-	40
2 Extendable Gearbox	1	20mm	YSB20772E	YSB20902E	2 per lock	-	40
2 Extendable Gearbox	1	22mm	YSB22772E	YSB22902E	2 per lock	-	40
Flush Rod Size 1, LH	1	520- 670mm	YSB37712L	YSB39012L	1 per rod	1 per rod	40
Flush Rod Size 1, RH	1	520- 670mm	YSB37712R	YSB39012R	1 per rod	1 per rod	40
Flush Rod Size 2, LH	1	670- 820mm	YSB37722L	YSB39022L	1 per rod	1 per rod	40
Flush Rod Size 2, RH	1	670- 820mm	YSB37722R	YSB39022R	1 per rod	1 per rod	40
Flush Rod Size 3, LH	1	820- 970mm	YSB37732L	YSB39032L	1 per rod	1 per rod	40
Flush Rod Size 3, RH	1	820- 970mm	YSB37732R	YSB39032R	1 per rod	1 per rod	40
Flush Rod Size 4, LH	1	970-1120mm	YSB37742L	YSB39042L	1 per rod	1 per rod	40
Flush Rod Size 4, RH	1	970-1120mm	YSB37742R	YSB39042R	1 per rod	1 per rod	40
Flush Rod Size 5, LH	1	1120-1270mm	YSB37752L	YSB39052L	1 per rod	1 per rod	40
Flush Rod Size 5, RH	1	1120-1270mm	YSB37752R	YSB39052R	1 per rod	1 per rod	40
Flush Rod Size 6, LH	1	1270-1420mm	YSB37762L	YSB39062L	1 per rod	1 per rod	40
Flush Rod Size 6, RH	1	1270-1420mm	YSB37762R	YSB39062R	1 per rod	1 per rod	40
Flush Rod Size 7, LH	1	1420-1520mm	YSB37772L	YSB39072L	1 per rod	1 per rod	40
Flush Rod Size 7, RH	1	1420-1520mm	YSB37772R	YSB39072R	1 per rod	1 per rod	40

MK1 Shootbolt

SBD Approved

BBA Approved

- High security fast-fit casement shootbolt system with a minimum amount of components
- Profile specific striker plates with a nightvent position
- Adjustable length on shootbolt throw
- Mushroom and shootbolt striker plates interlock for maximum security
- Passive shootbolt for security purposes only
- Compression is achieved by adjustable mushroom bolt on sash rebate sizes over 400mm
- Tested to 7.4kN (more than double the current requirements of BS 7950:1997)
- Endurance tested to over 40,000 operations
- Manufactured to ISO9001/2
- 7.7mm and 9mm mushroom cam heights available (320-400mm extension arms come without mushroom cams)
- BBA approved - 1469

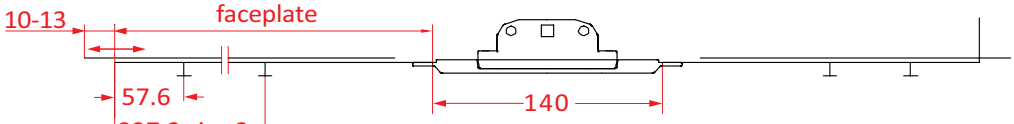

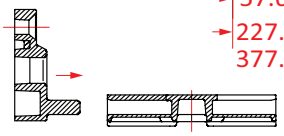

Size		Faceplate length
0	320-400	131.8
1	400-800	356
2	800-1100	492
3	1100-1400	642

Please contact our sales department for a keep to suit your profile

Mushroom

Shootbolt

Combi

TYPE	BACKSET	MUSHROOM HEIGHTS			NUMBER OF KEEPS REQUIRED			BOX QTY.
		NONE	7.7mm	9mm	SHOOTBOLT	MUSHROOM	COMBI	
Gearbox	20mm	MAC11262	-	-	-	-	-	40
Gearbox	22mm	MAC11263	-	-	-	-	-	40
ROD SIZE								
320-400mm	-	MAC58177	-	-	-	-	-	40
400-800mm	-	-	MAC58160	MAC58161	1 per rod	2 per rod	1 per rod	40
801-1100mm	-	-	MAC58162	MAC58163	1 per rod	2 per rod	1 per rod	40
1101-1400mm	-	-	MAC58164	MAC58165	1 per rod	2 per rod	1 per rod	40

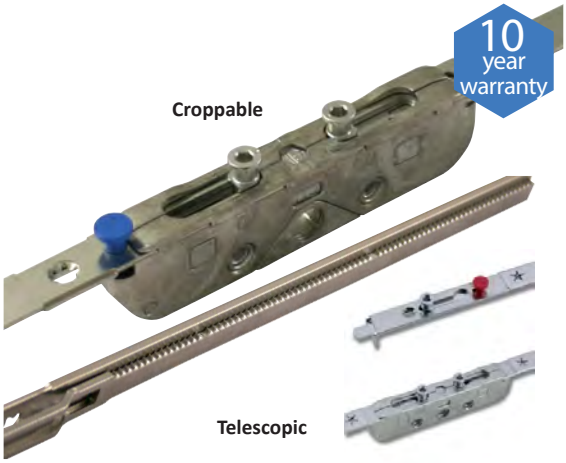

MSPAG Croppable or Telescopic Shootbolts

- Unique, flexible patented design with croppable or telescopic shootbolt arms
- 10 year product warranty
- All screw fixings on one face
- One **croppable** size covering an application range of 320mm up to 600mm
- Reduced stock holding through four **telescopic** sizes, covering an application range of 500mm up to 1500mm
- PAS 24-2012 security tested
- Endurance tested to Grade 5, 25,000 cycles EN 13126 Part 4
- MACO silver look surface treatment tested to 480 hours Class 5 EN 1670 corrosion resistance

Croppable

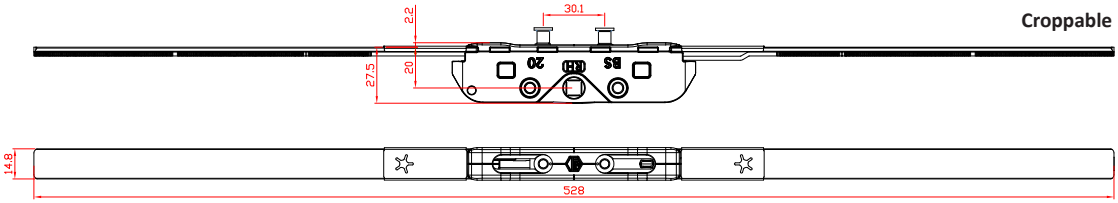

Telescopic

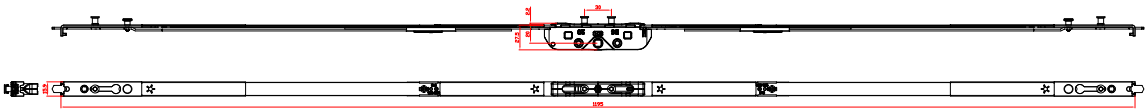

Please contact our sales department for a keep to suit your profile

Mushroom

Shootbolt

CROPPABLE VERSION						
BACKSET	MUSHROOM HEIGHTS			NUMBER OF KEEPS REQUIRED		BOX QTY.
	NONE	7.7mm	9mm	SHOOTBOLT	MUSHROOM	
GEARBOX						
20mm	-	MAC219781	MAC219783	-	1 per lock	10
22mm	-	MAC219782	MAC219784	-	1 per lock	10
COVER PLATE						
-	MAC368666	-	-	-	-	100
END PIECE (To be used with the above gearboxes for sizes between 320 and 600mm)						
Shallow Depth	MAC219785	-	-	1 per end piece	-	20
Full Depth	MAC228590	-	-	1 per end piece	-	20
TELESCOPIC VERSION						
BACKSET	SASH REBATE SIZE					
20mm	500-600mm	MAC227990	MAC228000	2 per lock	3 per lock	10
20mm	601-700mm	MAC227991	MAC228001	2 per lock	3 per lock	10
20mm	701-900mm	MAC227992	MAC228002	2 per lock	3 per lock	10
20mm	901-1200mm	MAC227993	MAC228003	2 per lock	3 per lock	10
20mm	1201-1500mm	MAC227994	MAC228004	2 per lock	3 per lock	10
22mm	500-600mm	MAC227995	MAC228005	2 per lock	3 per lock	10
22mm	601-700mm	MAC227996	MAC228006	2 per lock	3 per lock	10
22mm	701-900mm	MAC227997	MAC228007	2 per lock	3 per lock	10
22mm	901-1200mm	MAC227998	MAC228008	2 per lock	3 per lock	10
22mm	1201-1500mm	MAC227999	MAC228009	2 per lock	3 per lock	10

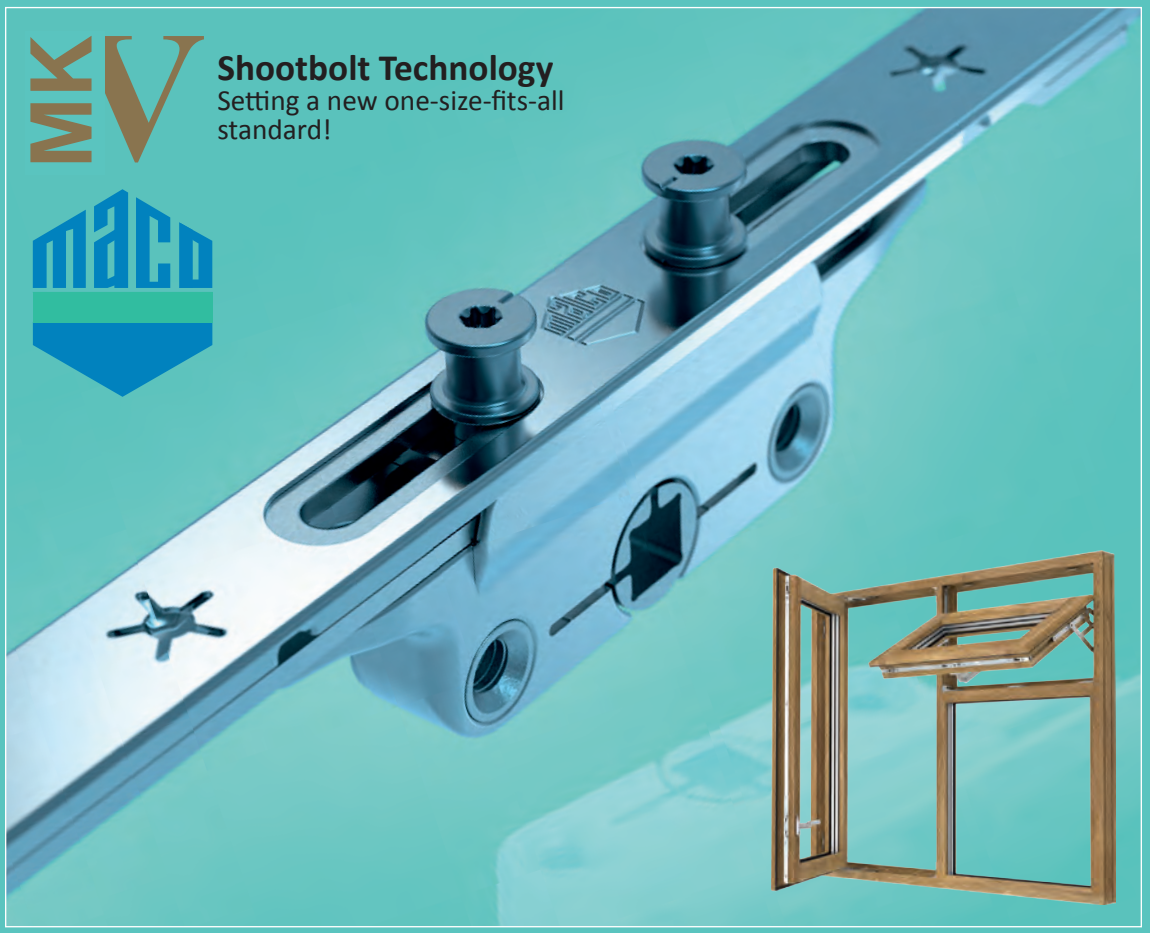

With MKV from MACO, you can finally have it all! An ultra-versatile shootbolt system that works with virtually any window type, material and style, as well as delivers market-leading security and performance, all carefully engineered for a fast, trouble-free fit!

Keeping things solid and simple for fabricators

- 21mm Universal back set as standard
- Ultimate adaptability - 1 size fits all profile systems (20, 21 & 21mm)
- Reduced stock holding – no need to carry stock of multiple lock variants
- Lock case is both smaller and stronger than traditional lock cases
- Smaller lock case means less routing prep and maximum sash strength

Achieving a perfect fit, faster and fuss-free

- Stronger mushroom cams
- Make even minute tweaks easily with the new Torx adjustment system
- Fewer screws located on the front plate streamline and simplify manufacturer
- Unique Eurogroove twist locks support simple size setting

Making the grade

- Tested to exceed PAS 24 security requirements
- Unique spindle follower reduces handle operating forces for smooth operation
- Class-leading weather performance and draught proofing
- Top-level corrosion resistance with MACO Class 5 silver finish as standard
- 10-year mechanical guarantee

Want to know more? Call sales on 01234 242724 now!

French Casement

- MK1 & MK2 extensions to be used on the slave side of a pair of French casement windows
- Extensions suit a sash rebate height between 600-1400mm

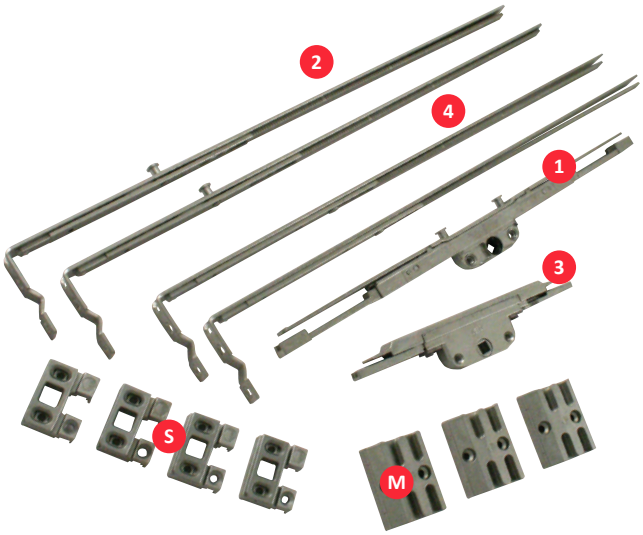

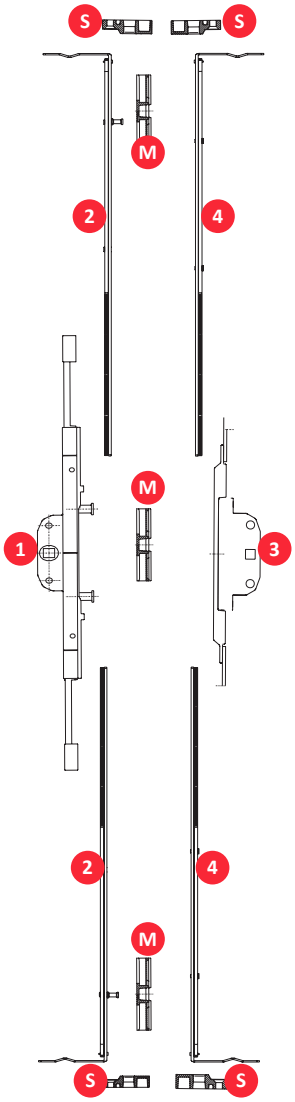

	TYPE	QTY PER KIT	BACKSET/SIZE	MUSHROOM HEIGHTS NONE	7.7mm	9mm	NUMBER OF KEEPS REQUIRED (S)HOOTBOLT	(M)USHROOM	BOX QTY.
1	Master Gearbox	1	20mm	-	MAC11033	MAC11035	-	1 per lock	20
	Master Gearbox	1	22mm	-	MAC11034	MAC11037	-	1 per lock	20
2	Master Extensions	2	600-1000mm	-	MAC57143	-	1 per rod	1 per rod	40
	Master Extensions	2	1001-1400mm	-	MAC57144	-	1 per rod	1 per rod	40
3	Slave Gearbox	1	20mm	MAC57175	-	-	-	-	20
	Slave Gearbox	1	22mm	MAC57176	-	-	-	-	20
4	Slave Extensions	2	600-1000mm	MAC57141	-	-	1 per rod	-	40
	Slave Extensions	2	1001-1400mm	MAC57142	-	-	1 per rod	-	40

Flush Sash Casement Gearing

10 year warranty

PAS 24 APPROVED

Flush Sash Extensions for MSPAG Telescopic and MACH II Shootbolt Espagnolettes

These new extensions from MACO have been specifically developed to accommodate increasingly popular flush casements for clean, square lines that look great on traditional and contemporary properties alike. **Unlike traditional flush sash systems, these new extensions have a second double mushroom cam on the faceplate which allows an aerating night vent position.** They work with MACO MACH II Shootbolt Espagnolettes or MACO Telescopic Shootbolt Espagnolettes, come with a 10-year mechanical guarantee and are PAS 24: 2016 compliant.

Key features and benefits:

- Second double mushroom cam delivers **night vent facility** - a big improvement from single night vent products
- Available with 7.7 or 9.0mm mushroom cams
- All screw fixings are located on one face for **simpler, faster fabrication** - saving you valuable time
- PAS 24: 2016 certified for **enhanced security performance**
- Adjustable throw shootbolts - giving you increased flexibility
- Adjustable mushroom cam in the locked position
- **Durable** - endurance tested to Grade 5, 25,000 cycles EN 13126 Part 4
- **Long-lasting corrosion-resistant** silver-look finish tested to 480 hours Class 5 EN 1670
- 10-year mechanical guarantee for **trouble-free operation**

TYPE	QTY PER KIT	BACKSET/SIZE	MUSHROOM HEIGHTS 7.7mm	MUSHROOM HEIGHTS 9mm	NUMBER OF KEEPS REQUIRED (S) HOOTBOLT	NUMBER OF KEEPS REQUIRED (M) USHROOM	BOX QTY.
1 Mk2 Gearbox	1	20mm	MAC11038	MAC11048	-	1 per lock	20
Mk2 Gearbox	1	22mm	MAC11041	MAC11050	-	1 per lock	20
2 Flush Sash Extensions	1	460-800mm	MAC105483	MAC105487	2 per rod	3 per rod	10 Pairs
Flush Sash Extensions	1	801-1100mm	MAC105484	MAC105488	2 per rod	3 per rod	10 Pairs
Flush Sash Extensions	1	1101-1400mm	MAC105485	MAC105489	2 per rod	3 per rod	10 Pairs

Wrap-around Gearing For Large Top Hung Casements

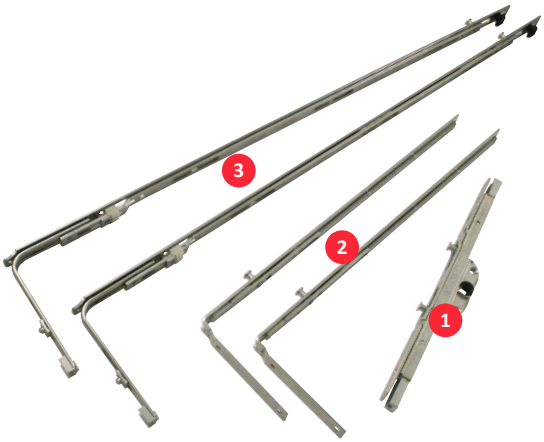

- These MK2 extensions allow large top hung windows to benefit from an additional locking point on the side of the sash between the hinge and the shootbolt
- The range consists of 2 shootbolt extensions covering a sash rebate width of between 500mm and 1100mm and 3 sizes of centre locks for fitting to the hinge side
- Due to the different geometry of the locking mechanism on the bottom and side of the casement, the nightvent function is not available
- The MK2 standard gearbox should be used with the wrap-around gearing not the MK2 short gearbox

Please contact our sales department for a keep to suit your profile

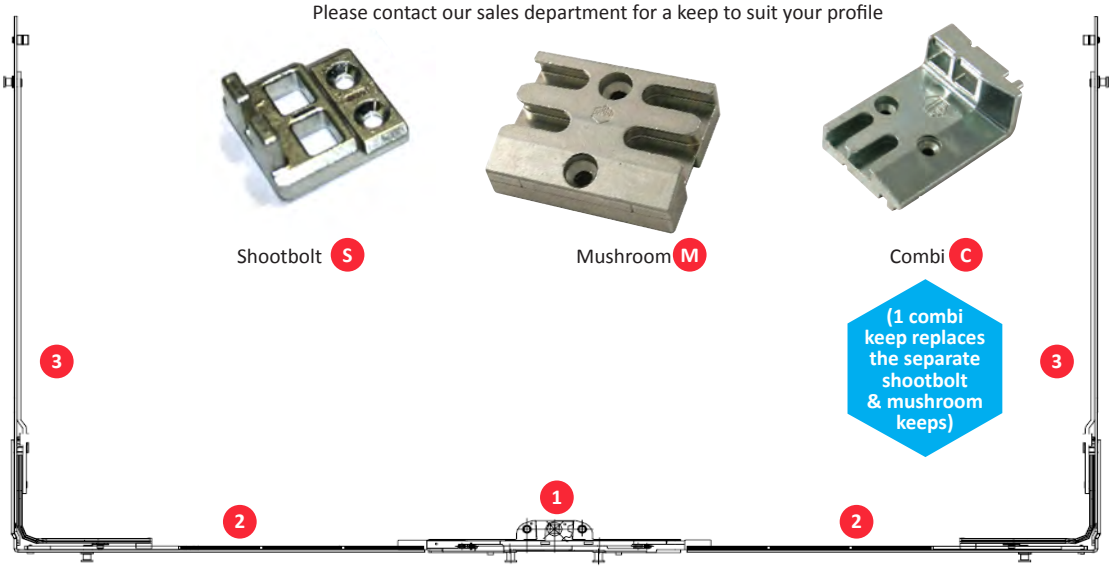

TYPE	QTY PER KIT	BACKSET/ SIZE	MUSHROOM HEIGHTS 7.7mm	MUSHROOM HEIGHTS 9mm	NUMBER OF KEEPS REQUIRED SHOOTBOLT	NUMBER OF KEEPS REQUIRED MUSHROOM	NUMBER OF KEEPS REQUIRED COMBI	BOX QTY.
1 Gearbox	1	20mm	MAC11038	MAC11048	-	1 per lock	-	20
1 Gearbox	1	22mm	MAC11041	MAC11050	-	1 per lock	-	20
Wrap-around Elements								
2 Bottom Horizontal	2	500-800mm	MAC220229	-	1 per rod and	1 per rod or	1 per rod	40
2 Bottom Horizontal	2	500-800mm	-	MAC220232	1 per rod and	1 per rod or	1 per rod	30
Bottom Horizontal	2	801-1100mm	MAC220230	-	1 per rod and	1 per rod or	1 per rod	40
Bottom Horizontal	2	801-1100mm	-	MAC220233	1 per rod and	1 per rod or	1 per rod	30
3 Side Vertical	2	456mm	MAC220029	MAC220035	-	1 per rod	-	20
3 Side Vertical	2	586mm	MAC220030	MAC220036	-	1 per rod	-	20
Side Vertical	2	686mm	MAC220031	MAC220037	-	1 per rod	-	20

WINDOW PRODUCTS LIMITED

Bow-Constrictor Sash Seal Enhancement

Alternative to wrap-around gearing

This clever spring device can be used to improve the seal of a sash at the vertical side of large top-hung windows. It can also provide a cost-effective, more tolerant alternative to the wrap-around gearing commonly used on oversized casements.

- Recommended for use on windows over 1200mm tall
- Bow-Constrictors should be fitted just after the end of the friction stay
- Allows use of the night-vent locking position when required
- Packers and keeps included for every profile
- Quality manufactured in the UK
- White in stock. Also available to order in brown and tan

SPRING SIZE 10mm	BOX QTY.
GTB10000	200

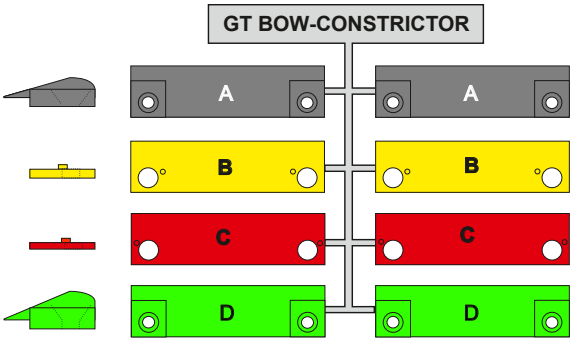

10mm
Sash Spring

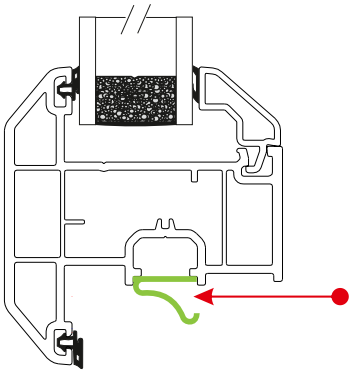

Fit the Sash Spring to the sash on the center line of the stay fixing

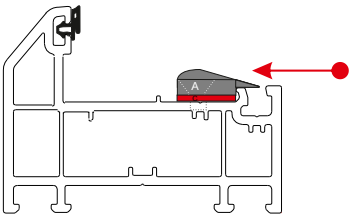

Fit a Frame Wedge "A" to include the packer "C" on the outer frame in the stay fixing area as shown

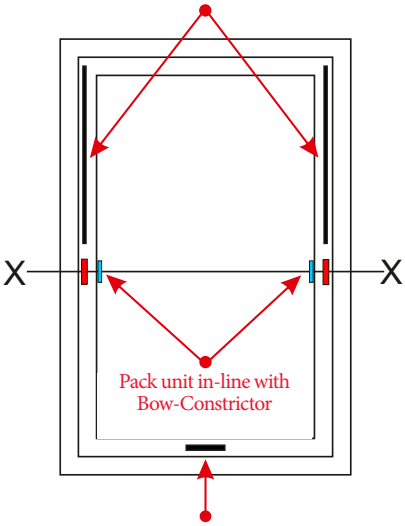

Bow-Constrictor must be fitted centerally at the points X-X to achieve the best seal

SBD Approved

Stallion 2 Shootbolt

TROJAN ...The Strength of Hardware Design

- Quick–fit telescopic shootbolt for eurogroove systems
- Unique 'clip–in' positioning in eurogroove
- 22mm backset with small gearbox suitable for most 20mm systems
- Automatic self–setting action always finds the required length
- Rising locking cams to maximise engagement and frame clearance
- Has been assessed under report BBA 2275
- Secured By Design licensed locking system

Please contact our sales department for a keep to suit your profile

Mushroom

Shootbolt

DESCRIPTION	SIZE	MUSHROOM HEIGHTS ADJUSTABLE	NUMBER OF KEEPS REQUIRED SHOOTBOLT	MUSHROOM	BOX QTY.
Size 1	300 – 400mm	TRO10001	2 per lock	-	20
Size 2	400 – 540mm	TRO10002	2 per lock	2 per lock	20
Size 3	540 – 820mm	TRO10003	2 per lock	2 per lock	20
Size 4	820 – 1300mm	TRO10004	2 per lock	2 per lock	20
Size 5	1300 – 1750mm	TRO10005	2 per lock	4 per lock	20
		PART CODE			
Stallion 2 Gearbox Cover - Black		TRO11000	-	-	20

Hinge Protectors

- For use with both 13 and 17mm friction stays
- Pressed steel with clear zinc passivate finish
- Will assist in passing BS 7950 when used in conjunction with a side hung hinge
- Will outperform a diecast equivalent
- Can be retrofitted to add additional security

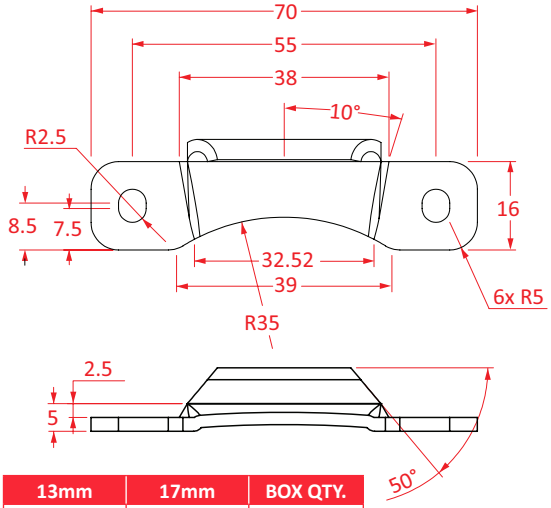

13mm	17mm	BOX QTY.
HIN99100	HIN99101	50 Sets of 4

SAC Bolts

- SAC bolt hinge protectors for casement windows
- Interlocking mechanism designed to lock-out and become stronger when a window is under attack by intruders
- Ensures a window returns each time to the prescribed position, thus extending the life of friction stays and windows as a whole

BOLT (CLAW)	EGRESS HINGE BOLT (CLAW)	KEEP (SLEEVE)	BOX QTY.
SAC10000	SAC10002	SAC10001	250

Friction Hinge Packer

- Packer designed to suit standard friction hinges with an 18mm track width
- Packer will allow any 13mm stack hinge to become a 17mm stack
- 3 packers are needed per hinge so a total of 6 are required for a pair of hinges
- Only available in white, but when the window is closed it will be concealed

PART CODE	BOX QTY.
HIN023199	50

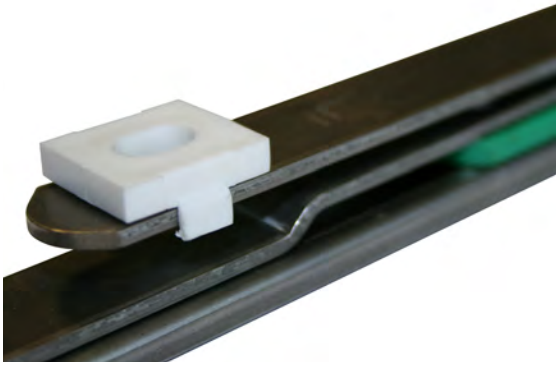

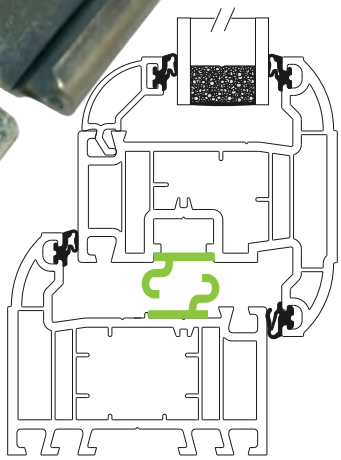

BBA Approved

Stay-Guard Window Hinge Protector

GT WINDOW PRODUCTS LIMITED

Stay-Guard provides a simple and effective way to enhance window security. This hinge-protection device can be fitted to PVCu windows to defend all types of stays against attack, including standard, egress and easy-clean window hinges. The Stay-Guard goes beyond meeting PAS 24 requirements to give you the ultimate security performance.

- Achieves hook engagement twice that of rival products for greater protection
- Made from high-tensile steel in the UK
- 240 hours salt spray
- Stay-Guard should be fitted into reinforcement no less than 10mm from the edge of the sash to achieve the best performance
- Available in various sizes to suit different stack heights

	STANDARD	TYPE A	TYPE B
13mm	GTS20013	GTS20013A	-
17mm	GTS20017	GTS20017A	GTS20017B
BOX QTY	200	200	200

Tip: We recommend you fit the Stay-Guard using 4.8 x 25mm pan head carbon steel zinc coated screws (not included). For the correct Stay-Guard for your profile system, please check the table below.

PROFILE	STACK HEIGHT 13mm	STACK HEIGHT 17mm	TYPE STANDARD	TYPE A	TYPE B
Aluplasti Ideal 70		•		•	
Deceuninck 2500		•		•	
Deceuninck 2800		•		•	
Duraflex Diamond		•	•		
Eurocell Logik 70		•		•	
Halo Flush		•			•
Halo Rustique		•		•	
Halo System 10		•		•	
Kommerling		•		•	
LB7000	•			•	
LB8000	•			•	
Liniar		•		•	
Liniar Flush (Standard)		•			•
Liniar Flush (Egress) Key ^=Frame $=Egress		•		^	$
Profile 22	•		•		
Rehau Total 70		•		•	
Rehau Tritec		•		•	
Select Advanced 70		•		•	
Spectus Elite 70		•		•	
Swish 24-7	•			•	
Synseal Legend 70		•		•	
Synseal Shield	•			•	
Synseal Synerjy	•			•	
Veka M70		•		•	
Veka Matrix FS70	•			•	

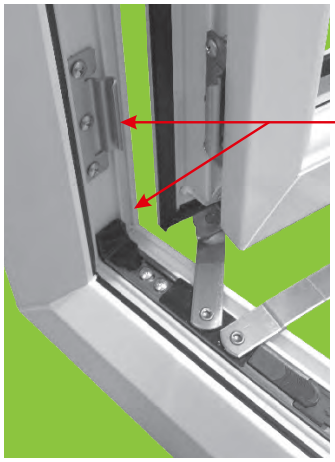

Fit Stay-Guard approx 75mm centres from the internal corner as shown here

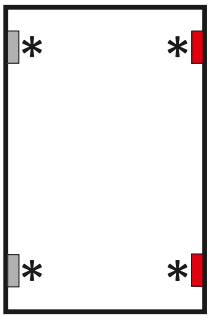

Fit run up blocks ▯ on opposite side to the Stay-Guard and pack the unit at the same positions marked * to stop sash movement

Cotswold Architectural Products · cubelock SAFE • SECURE • PEACE OF MIND · J BANKS · kore · securistyle · Yale

BRAND	TYPE					SIZE						HAND-ING			FINISH			RESTRIC-TION		SUITABLE		BS EN	PART CODES	PAGE
	RELEASABLE	NON-LOCKING	KEY LOCKING	CABLE	FIXED	4 INCH	6 INCH	8 INCH	9 INCH	200MM	UPSTAND (mm)	LEFT	RIGHT	NON	WHITE	BROWN	TAN	DISTANCE (mm)	FORCE (N)	WINDOWS	DOORS			
CubeLock	•		•	•						•				•	•			89	1971	•		13126-5	RST90000	49
CubeLock	•		•	•						•				•	•			89	1971	•		13126-5	RST91000	49
CubeLock	•		•	•						•				•	•			89	1971	•		13126-5	RST92000	49
Kore	•	•										•								•		6375	RST42011	50
Kore	•	•											•							•		6375	RST42012	50
Cotswold	•		•				•							•						•			CRS21060	50
Cotswold	•		•					•						•						•			CRS21080	50
J Banks	•		•									•						100		•		6375	RST50001	50
J Banks	•		•										•					100		•		6375	RST50002	50
Securistyle					•	•						•	•					111		•			SRS11040	51
Securistyle					•		•					•	•					165		•			SRS11060	51
Securistyle					•				•			•	•					245		•			SRS11090	51
Securistyle	•		•			•								•					1000	•		6375	SRS21040	51
Securistyle	•		•				•							•					1000	•		6375	SRS21060	51
Securistyle	•		•					•						•					1000	•		6375	SRS21080	51
Kore	•	•									21			•	•					•	•		SJA95000	53
Kore	•	•									21			•		•				•	•		SJA95009	53
Kore	•	•									21			•			•			•	•		SJA95008	53
Kore	•		•								21			•	•					•	•		SJA95110	53
Kore	•		•								21			•		•				•	•		SJA95119	53
Kore	•		•								21			•			•			•	•		SJA95118	53
Yale	•	•									17-21			•	•					•	•		SJA92000	53
Yale	•		•								17-21			•	•					•	•		SJA92100	53
Yale	•		•								17-21			•		•				•	•		SJA92109	53

FIXED

CABLE

RELEASABLE

BLOCKER

BS EN 13126-5:2011 1971N

Window Restrictors

cubelock
SAFE • SECURE • PEACE OF MIND

- Suitable for use on wood, aluminium, PVCu and steel window frames
- Cable length: 200mm
- Allows maximum 89mm opening to comply with child safety function of BS EN 13126-5:2011
- Independently tested to withstand a breaking force of 1971N
- (RST90000) CLS1 and (RST91000) CLS3 combi restrictors are both secured with a standard key mechanism
- (RST92000) CLB1 restrictor has a captive key disc lock mechanism, so the key won't get lost when open
- The sash fixing point for the CLS3 combi Cubelock fits behind the window handle and the locking mechanism fits directly below on the frame
- Includes tamper-proof screws to reduce the likelihood of abuse

TYPE		LOCK MECHANISM	FINISH	BOX QTY.	PART CODE
	CLS1 Supplied with key, tamper proof screws, and sash & frame parts	Standard Key	White	10	RST90000
	CLS3 Combi Supplied with key, tamper proof screws, and sash & frame parts (handle not included)	Standard Key	White	10	RST91000
	CLB1 Supplied with key, tamper proof screws, and sash & frame parts	Captive Key	White	10	RST92000

Concealed Restrictors

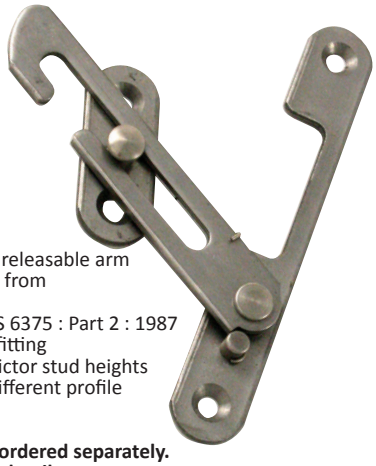

- Spring-loaded releasable arm
- Manufactured from stainless steel
- Complies to BS 6375 : Part 2 : 1987
- Ideal for retrofitting
- Different restrictor stud heights available for different profile stack heights

NB: studs are ordered separately. See below for details

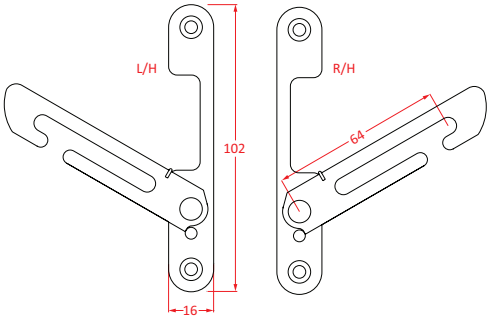

LEFT HAND	RIGHT HAND	BOX QTY.
RST42011	RST42012	50

Releasable Stay

- Locking friction arm mechanism is released using the key
- This allows the vent to open to its full opening potential, facilitating the cleaning of the exterior glass from inside the property, before being re-engaged to retain the restricted opening
- For use in a 16mm cavity
- Manufactured in austenitic steel
- Non-handed product
- Easy to fit, no routing required
- Can be used on windows without reinforcement

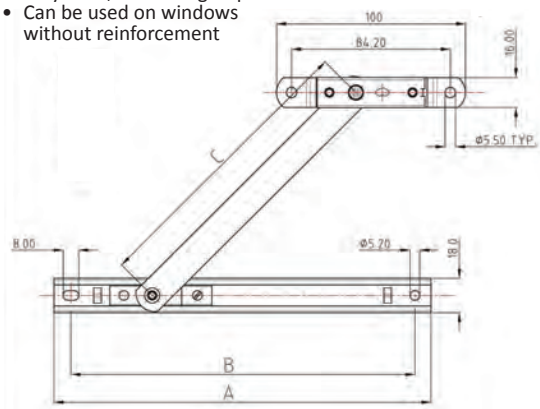

SIZE	DIM A	DIM B	DIM C	PART CODE	BOX QTY.
6 inch	49.5	140.5	101.6	CRS21060	25 Pairs
8 inch	199.5	182.0	152.0	CRS21080	25 Pairs
KEY	-	-	-	CRS21999	250

Concealed Restrictor Studs

- Restrictor stud for use with the Kore by Window Ware concealed restrictors
- Profile stud heights related to friction hinge stack height i.e. 13mm stack = 9.5mm and 17mm stack = 14.5mm stud heights

9.5mm	11.5mm	14.5mm	BOX QTY.
RST10095	RST10115	RST10145	50

Res-Lok Concealed Restrictor

- Designed to suit side hung or top hung applications
- Auto-locking
- Key releasable
- Suitable for PVCu, aluminium & timber
- Eurogroove or surface mounted
- Can be retrofitted
- Restricts sash to 100mm
- Conforms to BS 6375 Part 2:1987
- Constructed from stainless steel & zinc alloy

NB: screws & studs sold separately

LEFT HAND	RIGHT HAND	BOX QTY.
RST50001	RST50002	50

STUDS	BOX QTY.
RST51115	100

Restrictor Stay

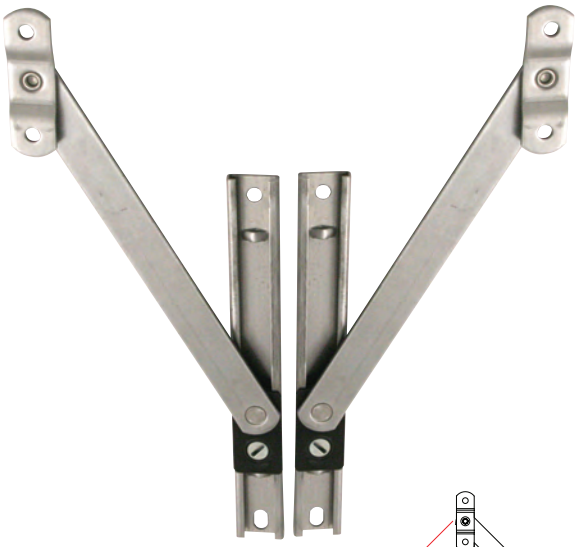

- Suitable for when a specific sized opening is required
- Manufactured from stainless steel
- Sold in pairs
- Non-releasable

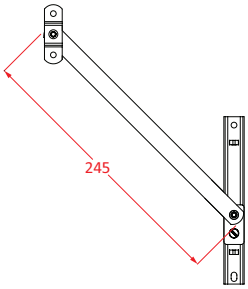

9" – SRS11090

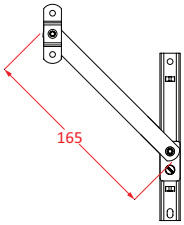

6" – SRS11060

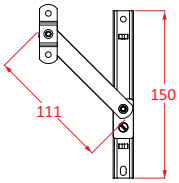

4" – SRS11040

All Dimensions in mm

4 INCH	6 INCH	9 INCH	BOX QTY.
SRS11040	SRS11060	SRS11090	25 Pairs

Detachable Restrictor Stay

- Restrictor stay used to restrict the opening of casement windows
- Tested to BS 6375 Part 2:2209
- Can withstand a force in excess of 1000N when opened at the restricted position
- 10 year guarantee
- Order the key to let the user release the restrictor arm, allowing the window to be fully opened
- **Keys sold separately**

4 INCH	6 INCH	8 INCH	BOX QTY.
SRS21040	SRS21060	SRS21080	50
KEY	-	SRS21999	1

WINDOW PRODUCTS LIMITED

Sash-Seal Prevents Sash Bow and Leaks

This highly-effective spring device serves two purposes; to improve the seal of a sash on the hinged side of a window and prevent the sash from bowing. Whenever the window is closed, the sash spring pushes against the frame wedge to ensure a firmer seal. Sash-Seal can help to reduce the likelihood of leaking casements on PVCu, timber and aluminium frames, as well as improve their performance and lifespan for reduced call-outs and satisfied customers.

- Helps keep windows weathertight and reduces risk of bowing
- Fits in the middle of the window
- 1 set required per sash
- Universal fitting – versions available for all 13mm and 17mm stack height systems
- Quality manufactured in the UK
- White and black in stock. Grey, brown and tan also available to order.

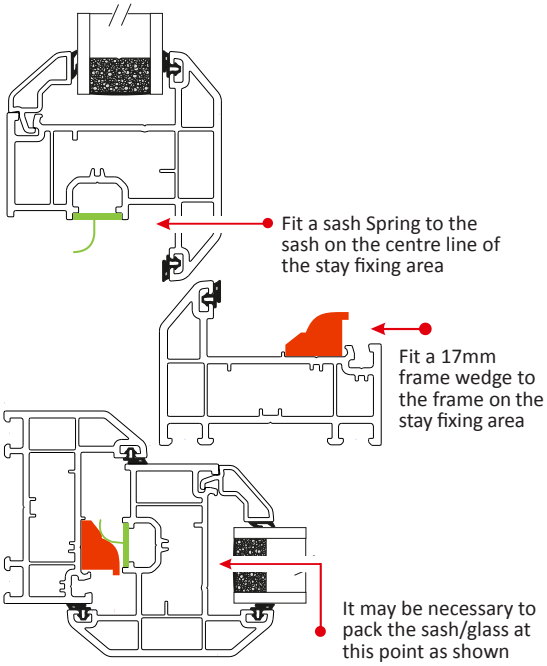

COLOUR	WHITE	BLACK
13mm	GTS10013	GTS10513
17mm	GTS10017	GTS10517
BOX QTY	200	200

Sash Locating Wedges

- Ensures positive closure of casement windows
- Helps prevent sashes from bowing
- Improves weather-sealing
- Compatible with any system which incorporates full depth euro groove and takes a 17mm stack friction stay

NB: Please contact our sales office to confirm profile suitability

WHITE	BROWN	BOX QTY.
WED300111	WED300112	100

Sash Locating Wedges

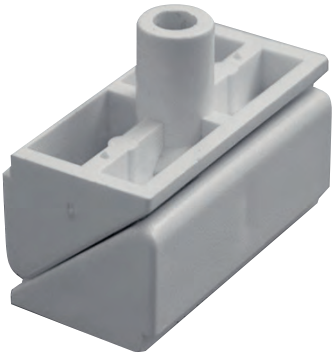

- Ensures positive closure of casement windows
- Helps prevent sashes from bowing
- Improves weather sealing
- Compatible with any system which incorporates full depth eurogroove and takes a 17mm stack friction stay

NB: Please contact our sales office to confirm profile suitability

WHITE	BROWN	BOX QTY.
WED60000	WED60002	100

Sash Blocker

Non-locking

Key Locking

- Includes 3 sizes of buttons
- Available in white, tan & brown
- Complete with screws & screw covers
- Key locking or non-locking version

TYPE	WHITE	BROWN	TAN	BOX QTY.
Non-locking	SJA95000	SJA95009	SJA95008	10
Locking	SJA95110	SJA95119	SJA95118	10

Sash Blocker

Non-locking, White

Key Locking, Brown

- Suitable for windows and doors
- Offers additional security to both new & existing doors & windows
- Easily retrofitted
- Available in white or brown
- Allen key locking and non–locking versions available
- Suitable for upstands of 17–21mm
- Includes coloured screw cover caps and 3 arm packers, sizes 1.5, 3 & 5mm

TYPE	WHITE	BROWN	BOX QTY.
Non-locking	SJA92000	-	10
Locking	SJA92100	SJA92109	10

Drainage Caps

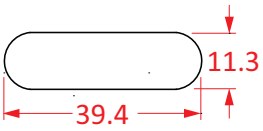

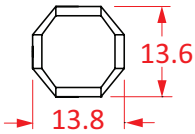

- Designed for 5 x 25mm drainage slots
- Positive clip fit
- Smooth modern design - no dirt traps
- Moulded from PVC for longterm colour stability
- Available in a choice of white, brown, tan and black colours

SHAPE	WHITE	BROWN	TAN	BLACK	BOX QTY.
Oblong	FDC50101	FDC50102	FDC50108	FDC50109	100
Round	FDC66310	FDC66390	FDC66380	-	100

Run Up Bricks

- Ensures positive closure of casement windows
- Sold in boxes of 100's
- 4 variants, 11 or 14mm height are universal fitting or A and C which are profile specific, please see the table below

SIZE/TYPE	WHITE
11mm	RUB10110
14mm	RUB10140
A	RUB6000A
C	RUB6000C

PROFILE	TYPE A	TYPE C
Deceuninck 1800	•	
Deceuninck LCA70	•	
Duraflex Diamond 65mm		•
Duraflex Diamond 70mm Featured Suite		•
Komerling Gold 58	•	
Komerling Gold 70	•	
PFL Ledgend 70	•	
Rehau Tri-tec	•	
Wymar	•	

Required Measurements

Cockspur

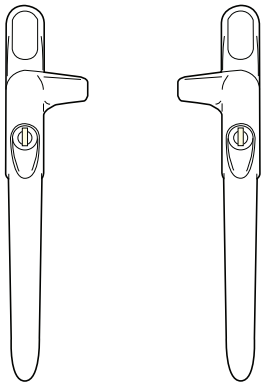

Left Hand Right Hand

Cockspur

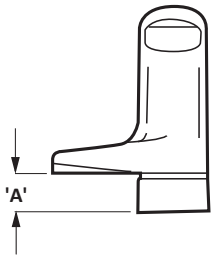

A = Upstand height
9 - 21mm

Espagnolette

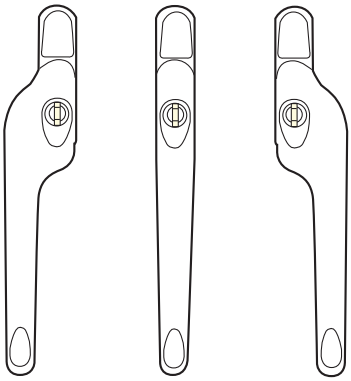

Left Hand Inline (Universal Handing) Right Hand

Espagnolette

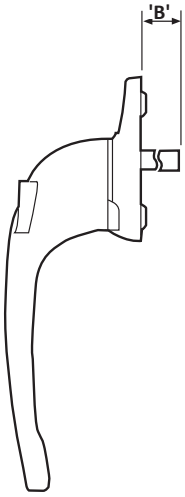

B = Spindle length
9 - 55mm

HANDLE TYPE	HANDING			UPSTAND 'A' (mm)			LOCKING		FINISH								GUARANTEES				BRAND	PAGE
	LEFT	RIGHT	INLINE	9	15.5	21	NON-LOCKING	KEY LOCKING	WHITE	CHROME	SILVER	GOLD	BRASS	BRONZE	ANTHRACITE GREY RAL7016	BLACK	MECHANICAL	CORROSION BS EN	BBA	SBD		
Cockspur	•	•		•	•	•	•	•	•	•		•				•	10 Years	1670			Trojan	56
	•	•		•		•		•	•		•					•	2 Years	1670:4	•		Securistyle	56
	•	•		•	•	•		•	•	•	•	•				•					Kore	56

HANDLE TYPE	HANDING			SPINDLE LENGTH 'B' (mm)							EMERGENCY EXIT	LOCK-ING		FINISH								GUARANTEES				BRAND	PAGE
	LEFT	RIGHT	INLINE	9	15	20	30	35	40	55		NON-LOCKING	KEY LOCKING	WHITE	CHROME	SILVER	GOLD	BRASS	BRONZE	ANTHRACITE GREY RAL7016	BLACK	MECHANICAL	CORROSION BS EN	BBA	SBD		
Espagnolette			•	•	•		•		•	•			•	•	•					•	•	10 Years	1670:4 1670:5			Mila Smart	57
	•	•	•				•		•				•	•	•		•				•	10 Years	1670:4 1670:5			Mila Hero	58
	•	•	•	•	•	•	•		•		•	•	•	•	•			•			•	10 Years	1670:4		•	Securistyle	59
	•	•	•		•	•	•		•		•	•	•	•	•	•	•				•	10 Years	1670	•		Trojan	59
	•	•						•	•	•			•	•	•	•	•		•		•	10 Years	1670			Regal Hardware	60-61

TYPE	INFORMATION
BS EN 1670:2006	Corrosion resistance to BS EN 1670: 2006 Grade 3 is the recommended minimum requirement for most hardware components. However in particularly corrosive environments such as coastal regions or industrial areas, a higher grade 4 or 5 corrosion resistance may be required to prolong service life. Remember that any door and window hardware will last longer and perform better with regular maintenance as specified by manufacturer guidelines.

GRADE	CORROSION RESISTANCE	TEST EXPOSURE TIME	SERVICE CONDITIONS
0	No defined	-	No specific service conditions where a defined corrosion resistance is not relevant.
1	Low	24hrs	Service indoors in warm dry atmospheres.
2	Moderate	48hrs	Service indoors where condensation may occur
3	High	96hrs	Service outdoors where occasional or frequent wetting by rain or dew may occur
4	Very high	240hrs	Service outdoors in very severe conditions
5	Exceptionally high	480hrs	Service outdoors in exceptionally severe conditions where longterm protection of the product is required.

TROJAN ...The Strength of Hardware Design

Sparta Cockspur Handles

- Ergonomically designed, push to release espagnolette handle
- Positive Stop ensures correct closure position
- High quality die-cast barrel

UPSTAND	BUTTON COLOUR	BLACK	BLACK	BLACK	BLACK	BOX QTY.
	HANDING/ COLOUR	WHITE	CHROME	PVD GOLD	BLACK	
9mm	Left Hand	HDL09903	-	-	-	10
9mm	Right Hand	HDL09904	-	-	-	10
15.5mm	Left Hand	HDL15903	HDL15923	-	HDL15953	10
15.5mm	Right Hand	HDL15904	HDL15924	-	HDL15954	10
21mm	Left Hand	HDL21703	HDL21713	HDL21793	-	10
21mm	Right Hand	HDL21704	HDL21714	HDL21794	-	10
ACCESSORIES		WHITE	CHROME	GOLD	BLACK	
Cover Caps		ESP99700	ESP99702	ESP99709	ESP99705	80
Key		-	ESP99799	-	-	1

securistyle

Virage Cockspur Handles

2 YEAR GUARANTEE

- Ergonomically designed, push to release espagnolette handle
- Positive Stop ensures correct closure position
- High quality diecast barrel
- 2 year guarantee

UPSTAND	BUTTON COLOUR	WHITE	BLACK	BLACK	BLACK	BOX QTY.
	HANDING/ COLOUR	WHITE	BLACK	SILVER	GOLD	
9mm	Left Hand	HDL10903	HDL10953	HDL10913	HDL10993	25
9mm	Right Hand	HDL10904	HDL10954	HDL10914	HDL10994	25
21mm	Left Hand	HDL21903	-	-	HDl21993	25
21mm	Right Hand	HDL21904	-	-	HDL21994	25

WINDOW WARE We've got it

Striker plates for Cockspur Handles

Ideal for Repair

COLOUR	2mm	3mm	4mm	5mm	6mm	8mm	BOX QTY.
White	STR10012	STR10013	STR10024	STR10035	STR10046	STR10068	100
White	-	STR100013	STR100024	STR100035	STR100046	-	1000
Black	-	STR15013	-	STR15035	-	STR15068	100

kore

Repair Cockspur Handle Kit

Ideal for Repair

- Cockspur handle kit
- Suitable for 9-21mm upstands (with the use of the supplied nose wedges)
- Wedge kits sold separately
- Wedge kits suitable for 2-5mm upstands
  Packs contain 2 each of 2, 3, 4,and 5mm wedges (8 in total)

UPSTAND	BUTTON COLOUR	WHITE	BLACK	BLACK	BLACK	BLACK	BOX QTY.
	HANDING/ COLOUR	WHITE	BLACK	SATIN SILVER	CHROME	GOLD	
9-21mm	Left Hand	HDL21103	HDL21153	HDL21113	HDL21123	HDL21193	10
9-21mm	Right Hand	HDL21104	HDL21154	HDL21114	HDL21124	HDL21194	10
Wedge Kits (2-5mm) x 2		STR23450M	STR23455M	-	-	-	

PAS 24 PASSED

MECHANICAL OPERATION 10 years GUARANTEE

PAINTED SURFACE FINISH 10 years GUARANTEE

PLATED SURFACE FINISH 5 years GUARANTEE

ProLinea Smart Spindle™ Locking Espagnolette Handle

MILA Quality & service | It's in our DNA

The Mila smart spindle espagnolette window handle lets you mix and match components to suit your specific hardware requirements while keeping your stock holding to a minimum. First pick your preferred finish, then choose from interchangeable spindles in 5 lengths ranging from 9-55mm to effectively give a one-size-fits-all espag handle. It's a flexible, fail-safe repairhardware solution designed to suit most common UK PVCu profile systems.

Highlights

- Suitable for PVCu, aluminium and timber windows
- Supplied with a 9mm spindle as standard
- Spindle lengths sold separately: 15, 30, 43, 55mm
- Easy-fit spindles can't be inserted the wrong way into the handle thanks to one-way rosette
- Positive stop rosette gives audible click when lever is rotated through 90°
- Edge-to-edge cover caps achieve clean aesthetics
- Ergonomic button and finger grips on the lever give user comfort and control
- Made from strong, durable zinc alloy
- Additional cover caps and keys available

Guarantees and certifications

- Security tested to PAS 24: 2016
- Durability tested to 50,000 cycles with a 10-year mechanical guarantee
- Corrosion resistance:
  Plated finish salt spray tested to 240 hours with 5-year guarantee
  Painted finish salt spray tested to 480 hours with 10-year guarantee

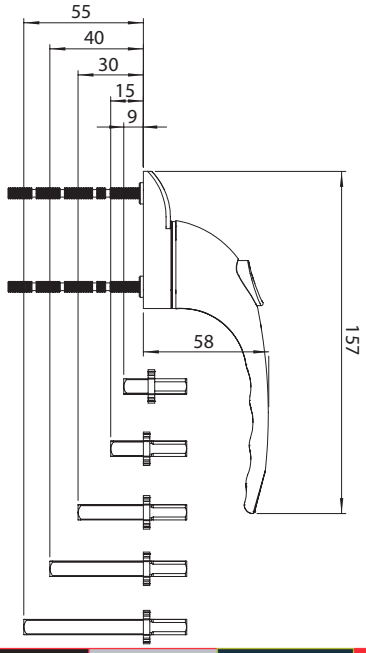

HANDING	WHITE	BLACK	POLISHED CHROME	ANTHRACITE GREY	BOX QTY.
Inline	MWH00200	MWH00250	MWH00220	MWH00240	20
SPINDLE LENGTH					
	15mm	30mm	43mm	55mm	-
	MWH15299	MWH30299	MWH43299	MWH55299	500

Hero Locking Espagnolette Handle

These hero espag window handles from Mila are a great choice for exacting fabricators who want crisp, modern styling to work with most profiles, plus industry-standard quality and guaranteed performance - all wrapped up with a competitive price tag and intelligent packaging that reduces their waste, keeps costs low, optimises deliveries and maximises their stock holding.

Key features

- Push to open, key lockable window handle
- Modern, uncluttered stylish design that compliments the rest of the hero range
- Rounded lever grip contoured for comfort
- Smooth-functioning ergonomic locking button which is colour-coordinated on white and black handles, black finish on gold and chrome handles.
- The patented easy-slide colour-matched screw cover cap is less fiddly to fit and less likely to get lost
- 2 spindle lengths to suit most profiles – 30 & 40mm
- 5 popular finishes – white, black, polished chrome, satin silver or gold
- Spare screw covers available
- Box quantity: 10
- Outer carton quantity: 50 (white & black finish) 40 (chrome & gold finish)
- Pallet quantity: 2800 (white & black finish) 2520 (chrome & gold finish)

Guarantees & accreditations

- Independently tested to 50,000 cycles with a 10-year mechanical guarantee to ensure trouble-free service
- Corrosion tested to 240 hours salt spray with a 10-year painted surface finish guarantee and 5-year plated surface guaranteed for assured weather resistance
- Strength tested to 50kg

SPINDLE LENGTH	HANDING	WHITE	BLACK	POLISHED CHROME	POLISHED GOLD	BOX QTY.
30mm	Inline	ESP30400	ESP30450	ESP30420	ESP30480	10
30mm	Left Hand	ESP30403	ESP30453	ESP30423	ESP30483	10
30mm	Right Hand	ESP30404	ESP30454	ESP30424	ESP30484	10
40mm	Inline	ESP40400	ESP40450	ESP40420	ESP40480	10
40mm	Left Hand	ESP40403	ESP40453	ESP40423	ESP40483	10
40mm	Right Hand	ESP40404	ESP40454	ESP40424	ESP40484	10
Pallet Quantity		2800	2800	2520	2520	NA
SPARES		WHITE	BLACK	POLISHED CHROME	POLISHED GOLD	BOX QTY.
Screw Cover Cap		ESP99400	ESP99405	ESP99402	ESP99408	100
Key		-	-	ESP99499	-	100

SBD Approved

10 YEAR GUARANTEE

Virage Locking Espagnolette Handles

securistyle

- Ergonomically designed, push to release espagnolette handle
- Positive Stop ensures correct closure position
- High quality diecast barrel
- Black button on all locking variants
- White or green on non-locking variants
- 10 year mechanical guarantee

For 9mm spindle length please see page 308.

SPINDLE LENGTH	HANDING/ COLOUR	BLACK	SATIN CHROME	CHROME	BRASS	BOX QTY.
LOCKING COLOURED HANDLE WITH BLACK BUTTON						
15mm	Inline	ESP15100	-	-	-	25
15mm	Left Hand	ESP15103	ESP15143	ESP15123	ESP15193	25
15mm	Right Hand	ESP15104	ESP15144	ESP15124	ESP15194	25
20mm	Inline	-	-	-	-	25
20mm	Left Hand	ESP20103	-	ESP20123	ESP20193	25
20mm	Right Hand	ESP20104	-	ESP20124	ESP20194	25
30mm	Inline	ESP30105	-	-	-	25
30mm	Left Hand	ESP30103	-	ESP30123	ESP30193	25
30mm	Right Hand	ESP30104	-	ESP30124	ESP30194	25
40mm	Inline	ESP40105	ESP40145	ESP40110	ESP40195	25
40mm	Left Hand	ESP40103	ESP40143	ESP40113	ESP40193	25
40mm	Right Hand	ESP40104	ESP40144	ESP40114	ESP40194	25
NON-LOCKING WHITE HANDLE WITH COLOURED BUTTON				WHITE	GREEN	
30mm	Inline			ESP30100	-	25
40mm	Inline			ESP40100	ESP40100G	25
40mm	Left Hand			-	ESP40101G	25
40mm	Right Hand			-	ESP40102G	25

BBA Approved

10 YEARS MECHANICAL GUARANTEE

Sparta 2 Espagnolette Handle

TROJAN ...The Strength of Hardware Design

- Push to open, key lockable
- Included with every handle is a push fit cover, to make the handle non-locking if required
- 10 year mechanical guarantee
- Corrosion tested to BS EN 1670. Painted finishes Grade 5, plated finishes Grade 4
- BBA approved

SPINDLE LENGTH	BUTTON COLOUR / HANDING/ COLOUR	WHITE / WHITE	BLACK / WHITE	BLACK / SATIN SILVER	BLACK / CHROME	BLACK / BLACK	BLACK / PVD GOLD	BOX QTY.
15mm	Inline	ESP15700WA	ESP15700A	ESP15710A	ESP15720A	ESP15750A	ESP15790A	10
15mm	Left Hand	ESP15703WA	ESP15703A	ESP15713A	ESP15723A	ESP15753A	ESP15793A	10
15mm	Right Hand	ESP15704WA	ESP15704A	ESP15714A	ESP15724A	ESP15754A	ESP15794A	10
20mm	Inline	ESP20700WA	-	ESP20710A	ESP20720A	-	ESP20790A	10
20mm	Left Hand	ESP20703WA	-	ESP20714	ESP20723A	-	ESP20793A	10
20mm	Right Hand	ESP20704WA	-	ESP20714	ESP20724A	-	ESP20794A	10
30mm	Inline	ESP30700WA	ESP30700A	ESP30710	ESP30720A	ESP30750A	ESP30790A	10
30mm	Left Hand	ESP30703WA	ESP30703A	ESP30713	ESP30723A	-	ESP30793A	10
30mm	Right Hand	ESP30704WA	ESP30704A	ESP30714	ESP30724A	-	ESP30794A	10
40mm	Inline	ESP40700WA	ESP40700A	ESP40710	ESP40720A	ESP40750A	ESP40790A	10
40mm	Left Hand	ESP40703WA	ESP40703A	ESP40713	ESP40723A	ESP40753A	ESP40793A	10
40mm	Right Hand	ESP40704WA	ESP40704A	ESP40714	ESP40724A	ESP40754A	ESP40794A	10
ACCESSORIES		WHITE	GREEN	SILVER	CHROME	BLACK	GOLD	
Screw Cover Pad		ESP99700	-	-	ESP99702	ESP99705	ESP99709	100
Button Insert		-	ESP99710G	-	-	ESP99710	-	80
Sparta Key		-	-	ESP99799	-	-	-	1

Regal Monkey Tail Espag Handle

Inject distinctive character and timeless elegance into virtually any type of window with this monkey tail window handle from Regal Hardware. For any fabricator who needs to source period casement fasteners for UPVC windows and flush sash systems, this traditional casement fastener provides a cost-effective, off-the-shelf solution. The key-locking design offers enhanced aesthetics and modern convenience over other heritage-style handles which use Allen keys to secure them shut. The slim backplate fits the narrow sightlines typical of flush sash windows perfectly, ensuring the handle won't catch on the frame or overlap the bead line. Matching monkey tail window stays are also available, along with working or dummy pegs to suit any application.

Key features:

- Traditional monkey tail window handle
- Key-lockable design conveniently secures window
- Extensive choice of eye-catching finishes: electro gold, antique bronze, white, chrome, satin, graphite, pewter patina, black and bronze red tint
- Left- or right-handed variants available
- Fits both flush sash and 70mm systems
- Spindles available in 3 sizes (35mm, 40mm, 55mm) and come ready-marked at 5mm intervals to make cutting to size simpler
- Can be purchased with extra keys if preferred
- Spare keys available separately
- Screw to screw dimensions 42mm

Specifications:

- 10-year mechanical guarantee on all hardware
- **White, chrome, black, gold and graphite product guarantees:**
  10-year surface finish warranty against peeling, cracking or discoloration
  Corrosion tested to BS EN 1670 Grade 5
  Salt spray tested for 480 hours
- **Pewter, antique bronze and bronze red tint product guarantees**:
  1-year surface finish warranty against peeling, cracking or discoloration
  Corrosion tested to BS EN 1670 Grade 3
  Salt spray tested for 96 hours

SPINDLE LENGTH	HANDING	WHITE	BLACK	POLISHED CHROME	SATIN CHROME	ELECTRO GOLD	ANTIQUE BRONZE	BRONZE RED TINT	PEWTER PATINA	GRAPHITE	BOX QTY.
35mm	Left Hand	ESP35203	ESP35253	ESP35223	ESP35213	ESP35283	ESP35263	ESP35273	ESP35243	ESP35233	5
35mm	Right Hand	ESP35204	ESP35254	ESP35224	ESP35214	ESP35284	ESP35264	ESP35274	ESP35244	ESP35234	5
40mm	Left Hand	ESP40203	ESP40253	ESP40223	ESP40213	ESP40283	ESP40263	ESP40273	ESP40243	ESP40233	5
40mm	Right Hand	ESP40204	ESP40254	ESP40224	ESP40214	ESP40284	ESP40264	ESP40274	ESP40244	ESP40234	5
55mm	Left Hand	ESP55203	ESP55253	ESP55223	ESP55213	ESP55283	ESP55263	ESP55273	ESP55243	ESP55233	5
55mm	Right Hand	ESP55204	ESP55254	ESP55224	ESP55214	ESP55284	ESP55264	ESP55274	ESP55244	ESP55234	5
SPARES											
Keys				ESP99299							50

Regal Pear Drop Espag Handle

Inject a heritage design into almost any type of window with this pear drop window handle from Regal Hardware. Suitable for UPVC windows and flush sash systems, this traditional casement fastener provides high quality at a great price point. Secure key locking, and a slim backplate ensures the handles fit on the narrow sightlines typical of flush sash window perfectly, so there's no overlapping the bead line or catching on the frame. Matching pear drop window stays are also available, along with working or dummy pegs to suit any application.

Key features:
- Traditional pear drop window handle
- Key-lockable design conveniently secures window
- Extensive choice of eye-catching finishes: electro gold, antique bronze, white, chrome, satin, graphite, pewter patina, black and bronze red tint
- Left- or right-handed variants available
- Fits both flush sash and 70mm systems
- Spindles available in 3 sizes (35mm, 40mm, 55mm) and come ready-marked at 5mm intervals to make cutting to size simpler
- Can be purchased with extra keys if preferred
- Spare keys available separately
- Screw to screw dimensions 42mm

Specifications:
- 10-year mechanical guarantee on all hardware
- **White, chrome, black, gold and graphite product guarantees:**
  10-year surface finish warranty against peeling, cracking or discoloration
  Corrosion tested to BS EN 1670 Grade 5
  Salt spray tested for 480 hours
- **Pewter, antique bronze and bronze red tint product guarantees:**
  1-year surface finish warranty against peeling, cracking or discoloration
  Corrosion tested to BS EN 1670 Grade 3
  Salt spray tested for 96 hours

Shown here suited with stays & peg stays
(see pages 62-64 for details)

SPINDLE LENGTH	HANDING	WHITE	BLACK	POLISHED CHROME	SATIN CHROME	ELECTRO GOLD	ANTIQUE BRONZE	BRONZE RED TINT	PEWTER PATINA	GRAPHITE	BOX QTY.
35mm	Left Hand	ESP35203A	ESP35253A	ESP35223A	ESP35213A	ESP35283A	ESP35263A	ESP35273A	ESP35243A	ESP35233A	5
35mm	Right Hand	ESP35204A	ESP35254A	ESP35224A	ESP35214A	ESP35284A	ESP35264A	ESP35274A	ESP35244A	ESP35234A	5
40mm	Left Hand	ESP40203A	ESP40253A	ESP40223A	ESP40213A	ESP40283A	ESP40263A	ESP40273A	ESP40243A	ESP40233A	5
40mm	Right Hand	ESP40204A	ESP40254A	ESP40224A	ESP40214A	ESP40284A	ESP40264A	ESP40274A	ESP40244A	ESP40234A	5
55mm	Left Hand	ESP55203A	ESP55253A	ESP55223A	ESP55213A	ESP55283A	ESP55263A	ESP55273A	ESP55243A	ESP55233A	5
55mm	Right Hand	ESP55204A	ESP55254A	ESP55224A	ESP55214A	ESP55284A	ESP55264A	ESP55274A	ESP55244A	ESP55234A	5
SPARES											
Keys				ESP99299							50

Regal Hardware 10 inch Monkey Tail Window Stay

for Flush Sash & 70mm Profiles

MARK OF DISTINCTION

Designed to coordinate perfectly with the Regal Hardware monkey tail window handles, these monkey tail window stays really do look the part on both on modern and period properties alike. Designed to fit flush sash and 70mm window systems, this sleek heritage-style monkey tail casement stay can deliver ornamental or full-functioning capability when combined with either dummy or working window pegs. Thanks to Regal Hardware, there's never been a more cost-effective, easier way for fabricators to add period style window furniture to their product portfolio.

Key features:
- Traditional monkey tail window stay
- Coordinates perfectly with monkey tail locking window handle from Regal Hardware
- Extensive choice of eye-catching finishes
- Fits both flush sash and 70mm systems
- Combine with dummy or working window pegs to suit preferred application

Specifications:
- 10-year mechanical guarantee on all hardware
- **White, chrome, black, gold and graphite product guarantees:**
  10-year surface finish warranty against peeling, cracking or discoloration
  Corrosion tested to BS EN 1670 Grade 5
  Salt spray tested for 480 hours
- **Pewter, antique bronze and bronze red tint product guarantees:**
  1-year surface finish warranty against peeling, cracking or discoloration
  Corrosion tested to BS EN 1670 Grade 3
  Salt spray tested for 96 hours

Working and dummy peg stays (sold separately see page 64)

STAY LENGTH	WHITE	BLACK	POLISHED CHROME	SATIN CHROME	ELECTRO GOLD	ANTIQUE BRONZE	BRONZE RED TINT	PEWTER PATINA	GRAPHITE	BOX QTY.
10 inch	STY10200	STY10250	STY10220	STY10210	STY10280	STY10260	STY10270	STY10240	STY10230	5

Regal Hardware 10 inch Pear Drop Window Stay

Part of the coordinating Regal Hardware range, these high-quality pear drop window stays will inject heritage charm into almost any type of window. Suitable for flush sash and 70mm window systems, our traditional-style pear drop casement stays suite perfectly with the pear drop window handle and will provide a truly authentic look. Whether the stay needs to be fully functional or purely for decoration, simply pair with the correct dummy or working window pegs. respectively.

Key features:
- Traditional pear drop window stay
- Coordinates perfectly with Regal Hardware's pear drop key locking window handle
- Extensive choice of eye-catching finishes: electro gold, antique bronze, white, chrome, satin, graphite, pewter patina, black and bronze red tint.
- Fits both flush sash and 70mm systems
- Combine with dummy or working window pegs to suit ornamental or full-functioning applications

Specifications:
- 10-year mechanical guarantee on all hardware
- **White, chrome, black, gold and graphite product guarantees:**
  10-year surface finish warranty against peeling, cracking or discoloration
  Corrosion tested to BS EN 1670 Grade 5
  Salt spray tested for 480 hours
- **Pewter, antique bronze and bronze red tint product guarantees:**
  1-year surface finish warranty against peeling, cracking or discoloration
  Corrosion tested to BS EN 1670 Grade 3
  Salt spray tested for 96 hours

Shown here suited with handles & peg stays
(see pages 60-61 & 64 for details)

STAY LENGTH	WHITE	BLACK	POLISHED CHROME	SATIN CHROME	ELECTRO GOLD	ANTIQUE BRONZE	BRONZE RED TINT	PEWTER PATINA	GRAPHITE	BOX QTY.
10 inch	STY10200A	STY10250A	STY10220A	STY10210A	STY10280A	STY10260A	STY10270A	STY10240A	STY10230A	5

Regal Hardware Dummy & Working Window Peg Stays (pack of 2)

for Flush Sash & 70mm Profiles

MARK OF DISTINCTION

These pegs work with the key-lockable heritage-style monkey tail and pear drop window handles and stays from Regal Hardware. The result is a coordinated collection of beautiful window furniture that works with both flush sash and 70mm systems to retain character in period houses, as well as inject traditional charm with a modern twist into contemporary properties. Choose from dummy or working window pegs to achieve ornamental or fully functional capability. Thanks to Regal Hardware, there's never been a more cost-effective, easier way for fabricators to add period style window furniture to their product portfolio.

Working Peg

Dummy Peg

Key features:
- Traditional heritage-style window pegs
- Coordinate perfectly with Regal Hardware's key locking window handles and stays
- Extensive choice of eye-catching finishes: electro gold, antique bronze, white, chrome, satin, graphite, pewter patina, black and bronze red tint
- Fits both flush sash and 70mm systems
- Dummy or working window pegs to suit ornamental or full-functioning applications
- 2 x pegs per pack

Specifications:
- 10-year mechanical guarantee on all hardware
- **White, chrome, black, gold and graphite product guarantees:**
  10-year surface finish warranty against peeling, cracking or discoloration
  Corrosion tested to BS EN 1670 Grade 5
  Salt spray tested for 480 hours
- **Pewter, antique bronze and bronze red tint product guarantees:**
  1-year surface finish warranty against peeling, cracking or discoloration
  Corrosion tested to BS EN 1670 Grade 3
  Salt spray tested for 96 hours

Shown here suited with handles & stays
(see pages 60-63 for details)

PEG TYPE	WHITE	BLACK	POLISHED CHROME	SATIN CHROME	ELECTRO GOLD	ANTIQUE BRONZE	BRONZE RED TINT	PEWTER PATINA	GRAPHITE	BOX QTY.
Dummy	STP10200D	STP10250D	STP10220D	STP10210D	STP10280D	STP10260D	STP10270D	STP10240D	STP10230D	5
Working	STP10200FL	STP10250FL	STP10220FL	STP10210FL	STP10280FL	STP10260FL	STP10270FL	STP10240FL	STP10230FL	5

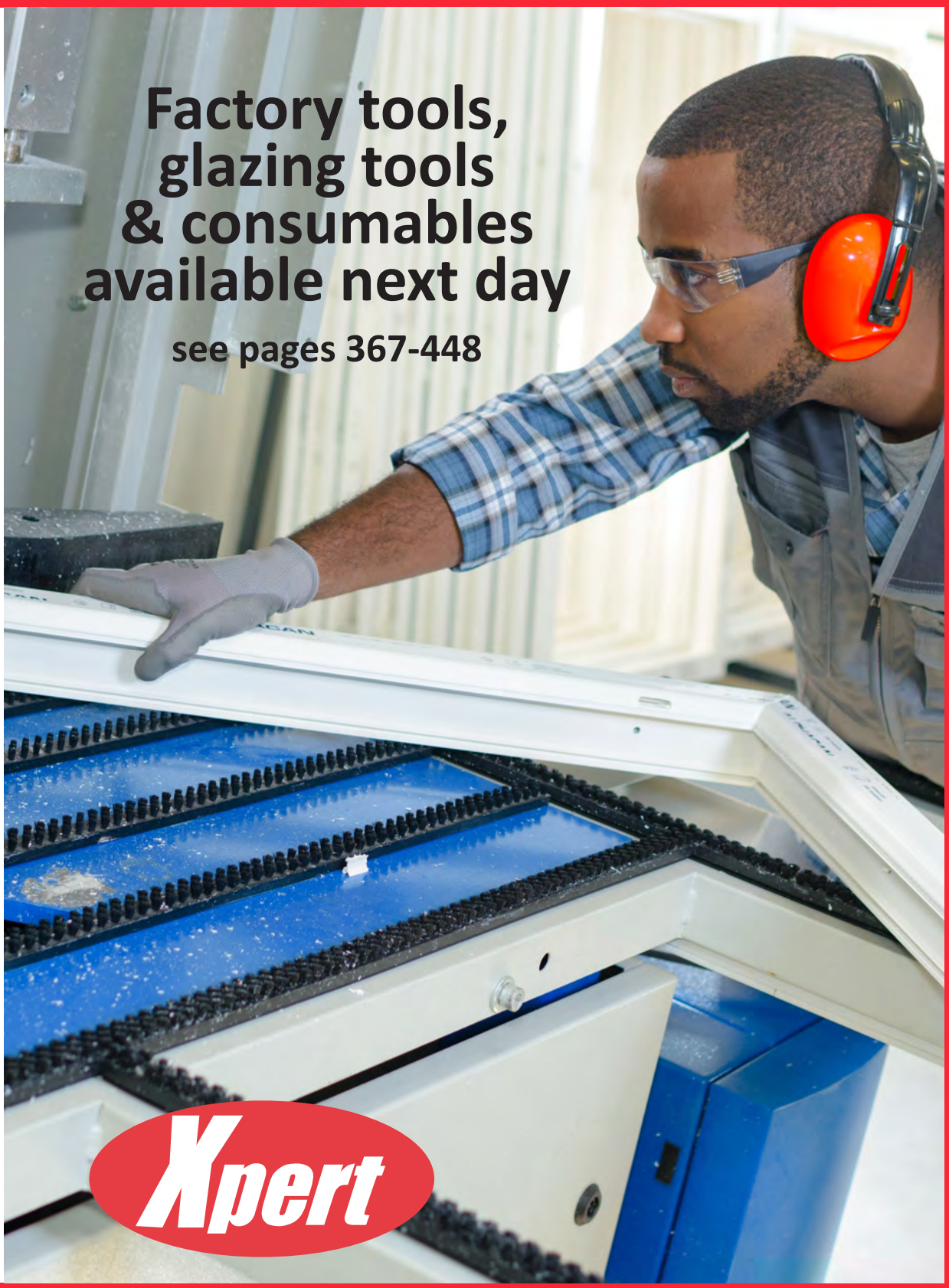
Factory tools,
glazing tools
& consumables
available next day
see pages 367-448
Xpert

CALDWELL Folding Openers

5 YEAR GUARANTEE

Caldwell folding openers provide a safe, hard-wearing, simple-to-use and cost-effective way to achieve restricted opening on casement windows in public or commercial buildings like schools, hotels, hospitals and offices. They are gravity dependant and therefore best suited to top-hung windows, although they may also be fitted to bottom-hung, fully reversible and pivot windows. The wide range of fixing brackets available on folding openers mean they are suitable for use on aluminium, PVCu, timber, steel and composite windows.

When it comes to building a best-fit folding opener system, product selection depends, in the first instance, upon the position of the window i.e. is pole operation required? This dictates the type of folding opener used. The next key consideration is the step size and screw centre. These measurements vary according to the casement profile and are critical to achieving a robust, full-functioning system.

Key Features:

- Configurations to suit virtually any profile
- Standard folding openers give a sash movement of 150mm, shorter openers are available on request.
- Resilient anodised satin silver finish
- Quality manufactured to BS EN ISO 9001: 2008
- Corrosion resistant to BS 7412: 2007
- Open/close cycle tested in excess of 100,000 cycles

Hand operated system shown

Pole operated systems

Wherever windows are high up or hard-to-reach due to obstructions, pole-operated folding openers provide a more durable and economical manual way to control windows remotely compared to electronic systems. The recommended high-level configuration usually comprises of 110/111 series or 'pork chop' folding openers, a pre-drilled tandem bar and a 263 tandem eye which can be operated easily and effectively by a boss pole.

110 Type High-level Folding Opener

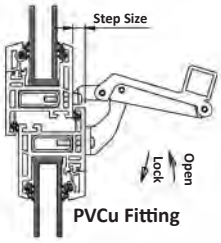

PVCu Fitting

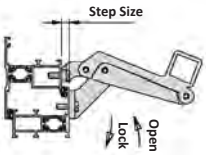

Aluminium Fitting

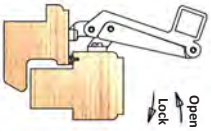

Timber Fitting

Hand operated systems

On low-level or easily accessible windows that can be safely operated by hand, the type 112 opener is the recommended choice. These openers can be linked by an undrilled tandem bar as there is no need for a tandem eye.

112 Type Low-level Folding Opener

Call sales on **01234 242724** to request your printed copy of our Fabricators Manual or download a PDF now at **windowware.co.uk/caldwell/literature/fabricators-manual-for-caldwell-folding-openers.pdf**

Folding Openers

Low-level Folding Openers

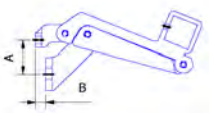

112, 113, 117 & 190

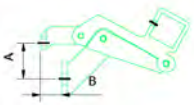

183 & 187

FO TYPE	DIMENSION A (VERTICAL SCREW FIXINGS)	PLATE HEIGHT		DIMENSION B (Step)				
		FRAME FIX	SASH FIX	FLUSH	5mm	7mm	11mm	16mm
112	25mm	25mm	10mm	-	CFO11205	CFO11207	CFO11207 + 2 x 2mm Packers CFO90002	CFO11216
113	15mm	17mm	9mm	-	-	CFO11307	CFO11307 + 2 x 2mm Packers CFO90002	-
117	32mm	-	-	CFO11700	-	-	-	-
117	32mm	25mm	10mm	-	CFO11700 + 5mm Packer CFO90005	-	-	CFO11716
183	32mm	25mm	10mm	-	CFO18305	CFO18305 + 2mm Packer CFO90002	CFO18305 + 5mm Packer CFO90005 & 1mm Packer CFO90001	-
187	48mm	25mm	10mm	-	-	-	CFO18716 + 5mm Frame Packer CFO91005	CFO18716
190	48mm	25mm	10mm	-	CFO19005	CFO19005 + 2mm Packer CFO90002	CFO19016 + 5mm Frame packer CFO91005 or CFO19005 + 5mm Packer CFO90005 & 1mm Packer CFO90001	CFO19016

High-level Folding Openers

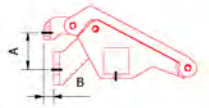

110, 111, 131, & 191

FO TYPE	DIMENSION A (VERTICAL SCREW FIXINGS)	PLATE HEIGHT		DIMENSION B (Step)				
		FRAME FIX	SASH FIX	FLUSH	5mm	7mm	11mm	16mm
110	25mm	25mm	13mm	CFO11000	-	-	-	-
111	25mm	25mm	10mm	-	CFO11100 + 5mm Packer CFO90006	CFO11107	CFO11107 + 2 x 2mm Packers CFO90002	CFO11116
131	38mm	25mm	10mm	-	CFO13105	CFO11105 + 2mm Packer CFO90002	CFO13116 + 5mm Frame Packer CFO91005 or CFO13105 + 5mm Packer CFO90005 & 1mm Packer CFO90001	CFO13116
191	48mm	25mm	10mm	-	-	-	CFO19116 + 5mm Frame Packer CFO91005	CFO19116

A

B - High-level

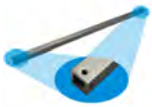

B - Low-level

C - End Cap

C - Screw

D - 263

E - 262

F

Folding opener accessories
These accessories enable you to refine your folding opener system to achieve a perfect fit and a professional finish every time. Our selection of different width packers let you accommodate intermediate step sizes, while tandem bar ends caps ensure a neat finish and a solid build.

KEY	DESCRIPTION	SIZE	TANDEM EYE TYPE	PART CODE
A	Operating Pole / Boss Pole	1400mm	262/263	CFO14000S
A	Operating Pole / Boss Pole	2000mm	262/263	CFO20000S
B	Tandem Bar - High Level	500mm	-	CFO20005
B	Tandem Bar - High Level	900mm	-	CFO20009
B	Tandem Bar - Low Level	500mm	-	CFO20015
B	Tandem Bar - Low Level	900mm	-	CFO20019
B	Universal Cut to Size	3050mm	-	CFO23000
C	Tandem Bar End Cap	-	-	CFO25064
C	Tandem Bar End Cap Screws	-	-	CFO99999
D	Tandem Bar Eyes	Large	262	CFO26200
E	Tandem Bar Eyes	Small	263	CFO26300
F	Folding Opener Packer	1mm	-	CFO90001
F	Folding Opener Packer	2mm	-	CFO90002
F	Folding Opener Packer	3mm	-	CFO90003
F	Folding Opener Packer - Nylon	5mm	-	CFO90005

Flush & Stepped DuoFlex Folding Openers

Stepped DuoFlex folding openers

These great-looking, curvy folding openers achieve the perfect balance of form and functionality! Modern aesthetics combine with flexible design features to produce an adaptable folding opener system that gives secure restricted opening and can easily accommodate a range of step sizes from 0-26mm with simple adjustment and no need for packers. That makes DuoFlex stepped openers ideally suited to most types of top-hung or centre-pivot outward opening PVCu windows.

- Suitable for use on PVCu window frames
- Contemporary, sleek styling
- Easy-fitting and completely adjustable without packers to accommodate 0-26mm step sizes
- Distance between fixing centres: 48mm
- Minimum sash height: 250mm on windows with butt hinges. 400mm where friction hinges are used.
- Gives 150mm throw when opening and closing sash
- Over centre design gives secure locking when the window is closed
- Cycle tested to over 100,000 operations
- Available in silver grey and white finish. Other RAL colours available on request
- Made in UK
- Materials: Aluminium alloy with plastic washers or bushes fitted to all moving joints

Tip: We recommend you use a single opener on sash width up to 500mm, two openers plus link bar on sash widths 600 to 900mm and three openers plus link bar for sash widths 900 to 1500mm.

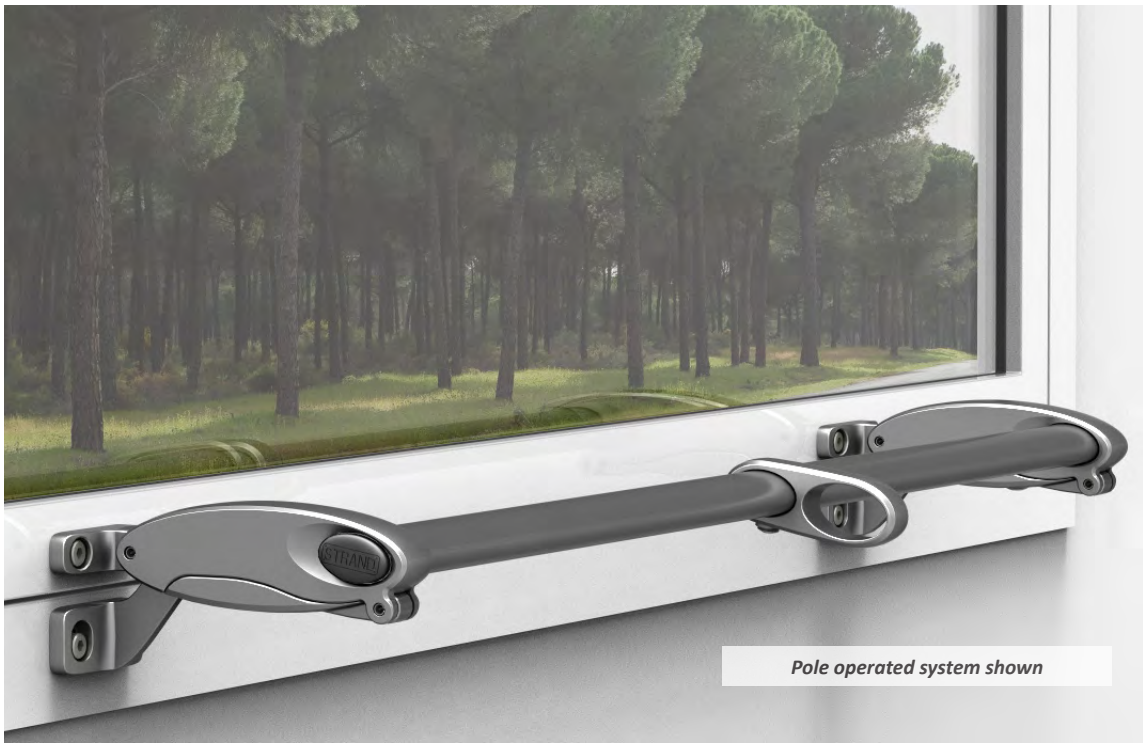

Pole operated system shown

Flush DuoFlex folding openers

With flexible, fully-adjustable, packer-free fitting, this Duoflex window opener can ably achieve safe, secure restricted opening on a range of open-out, flush-style window frames made from timber, aluminium or steel. Cycle tested to beyond 100,000 operations and constructed from strong, corrosion-resistant aluminium, these openers promise enduring, trouble-free service and superior pristine aesthetics.

- Fits most timber, aluminium or steel window frames
- Suitable for open-out top hung and centre pivot sashes
- Attractive and stylish design
- Fitter-friendly and easy to adjust to suit 0-10mm sash step sizes
- No need for packers
- Distance between fixing centres: 29mm
- Minimum sash height: 250mm on windows with butt hinges. 400mm where friction hinges are used.
- 150mm throw when opening and closing sash
- Over centre design gives a secure lock when the window is closed
- Cycle tested to over 100,000 operations
- Available in silver grey and white finish. Other RAL colours available on request
- Made in UK
- Materials: Aluminium alloy with plastic washers or bushes fitted to all moving joints

Tip: We advise that you use a single opener on sash width up to 500mm, two openers plus link bar on sash widths 600 to 900mm and three openers plus link bar for sash widths 900 to 1500mm.

Flush & Stepped DuoFlex Folding Openers

Stepped Folding Openers for PVCu

DIMENSION A	PLATE HEIGHT				FINISH	
(VERTICAL SCREW FIXINGS)	FRAME FIX	SASH FIX	THROW	STEP	SILVER	WHITE
48mm	19mm	11.5mm	150mm	0-26mm	SDF100320	SDF100325

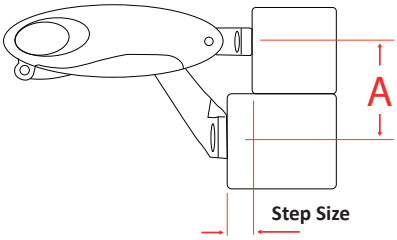

Flush Folding Openers for Aluminium

DIMENSION A	PLATE HEIGHT				FINISH	
(VERTICAL SCREW FIXINGS)	FRAME FIX	SASH FIX	THROW	STEP	SILVER	WHITE
29mm	19mm	11.5mm	150mm	0-10mm	SDF100220	SDF100225

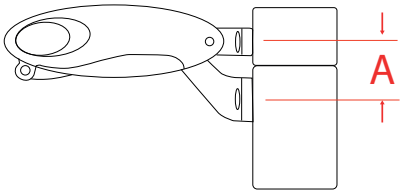

Folding opener accessories

These accessories enable you to refine your folding opener system to achieve a perfect fit and a professional finish every time. Our selection of different width packers let you accommodate intermediate step sizes, while tandem bar ends caps ensure a neat finish and a solid build. If you use a single opener on it's own, but you need a pole, you will also require the pole adaptor listed below.

A - Operating Pole

B - Link Bar

C - End Cap

D - Centre Ring

Accessories

KEY	DESCRIPTION	SIZE	BLACK	SILVER	WHITE
A	Operating Pole	1000mm	-	SDF501000	-
A	Operating Pole	1500mm	-	SDF501500	-
A	Operating Pole	2000mm	-	SDF502000	-
-	Pole Adaptor	-	-	SDF59999	-
B	Link Bar	300mm	-	SDF210300	SDF200300
B	Link Bar	600mm	-	SDF210600	SDF200600
B	Link Bar	900mm	-	SDF210900	SDF200900
B	Link Bar	1000mm	-	SDF211000	SDF201000
C	Link Bar End Caps	-	SDF30005	-	-
D	Centre Ring	-	-	SDF40001	SDF40000

HIGHLINE® WINDOW CONTROLS Technical Data

Minimum window height for full 250mm travel of T100 - 500mm

Chain openers fitted on windows less than recommended height must have opening restricted to 30% of the vent height using the T700 spring stop or T720 brass stop to shorten the cable run.

For safety reasons we recommend fitting side support stays to all bottom hung, open-in windows. For bottom hung applications you must fit the THL8200/0/1/5 fixing kit (see page 72) (sold separately).

Maximum Control Run

OPERATOR	MAXIMUM CONTROL RUN
T200	30 metres
T250	18 metres
T300	18 metres

Spent Travel Conduit

To allow for the forward/backward movement of the inner cable, a length of "spent travel" conduit must be fitted at either end of the control path i.e. past the last chain/screw jack and below the operator (except the T250 midi operator (see page 73) which has an integral "spent travel" tube).

TYPE OF OPERATOR	SPENT TRAVEL CONDUIT
SJ138600 Screw Jack	2.5m (for full 380mm travel)
T100 Chain Opener	0.3m

Number Of Openers Per Vent

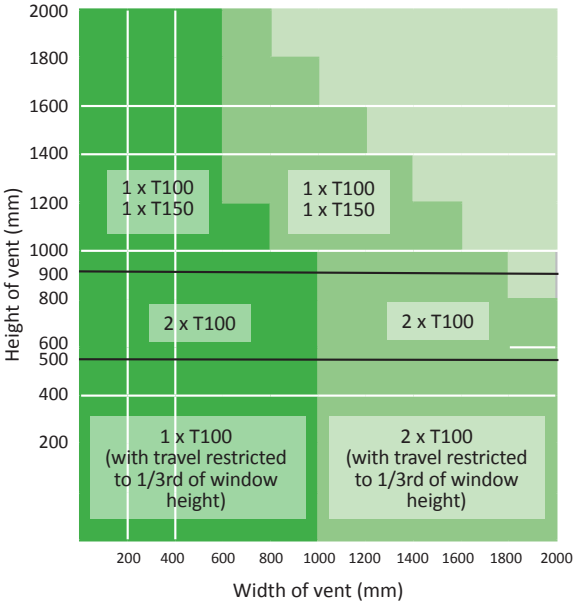

Type Of Operation

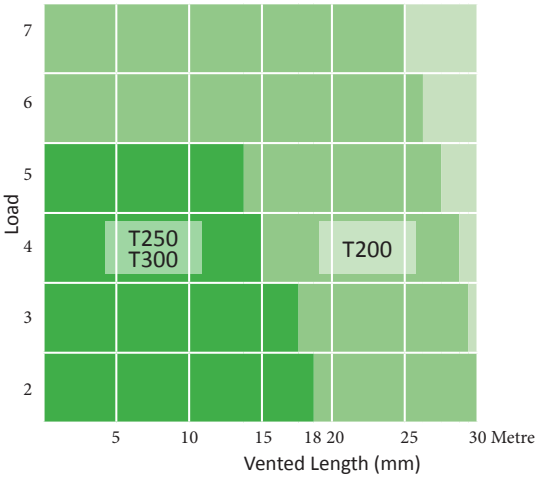

LOAD = No. of chain openers + No. of bends in conduit

The above figures are based on a single bend in the conduit path. For each additional bend deduct 1 metre from the Vented Length total.

The figures used in these charts are based on windows with 4mm double glazed units fitted to butt hinges or free pivots, not friction stays. Please refer to our sales or technical department for advice if friction stays are fitted.

Call sales on **01234 242724** to request your printed copy of our Highline Brochure & Order Form, or download PDF versions now at **windowware.co.uk/highline/literature/highline-window-controls-brochure**

Window Types

Roof Vent Roof Light | Top Hung Awning | Bottom Hung Hopper | Side Hung Casement | Louvre Jalouise | Horizontal Pivot | Dome

Installation Examples

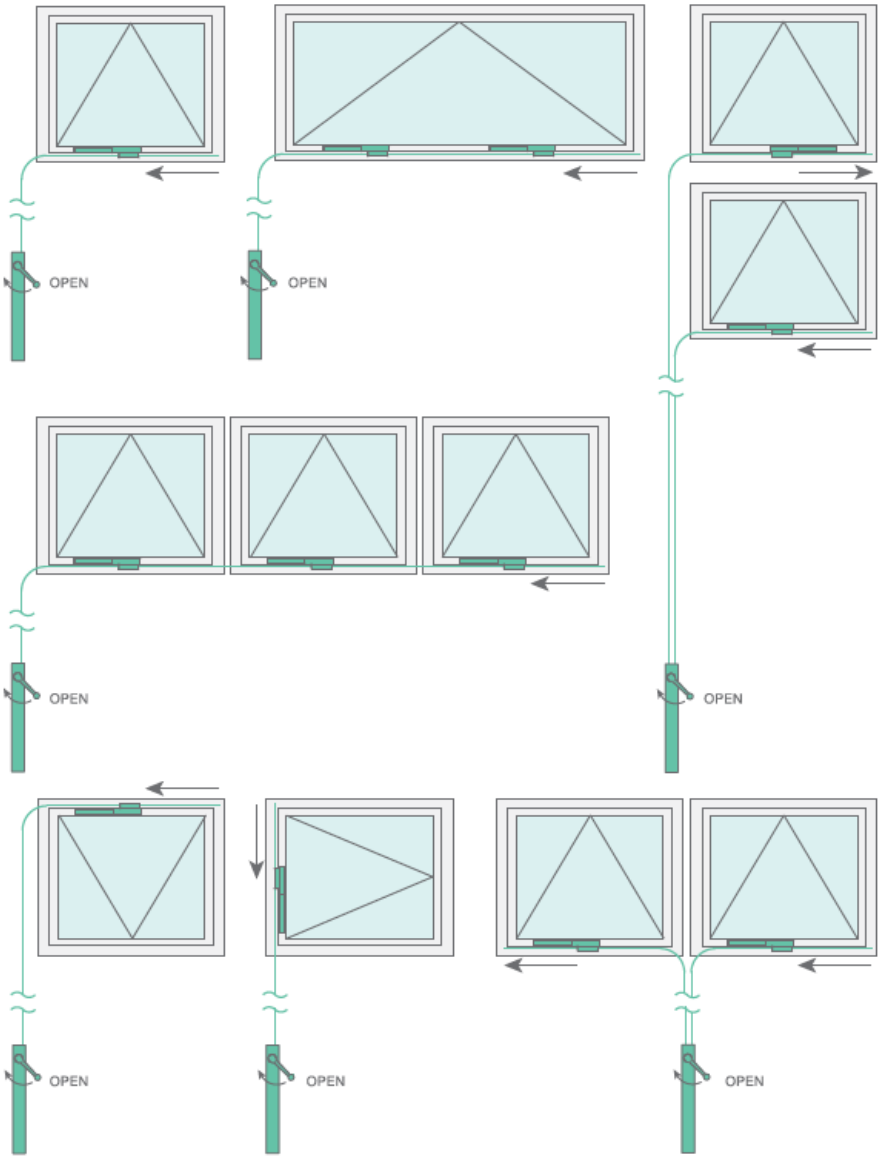

T100 Chain Openers

Top Hung Bottom Hung Side Hung

This compact window opener is one of the most popular choices in the range. It's neat, discreet and can be fitted to most top, bottom, and side hung windows to give a generous 250mm opening stroke for excellent natural ventilation.

- 250mm travel length
- Made to last from substantial zinc castings and aluminium extrusion
- Can be fitted on its own or linked with multiple T100 openers and controlled from a single T250, T200 or T300 mini operator
- Fixing plates and bracket fixing kits available to suit most window profiles
- Available in white, grey and black

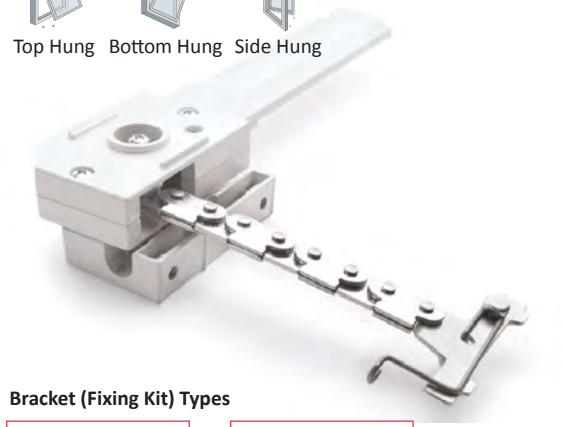

TIP: As a rule, frames wider than 1200mm should be fitted with a pair of chain openers.

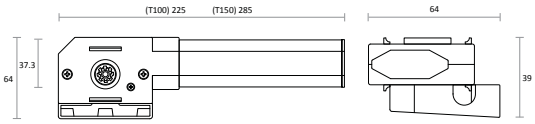

Bracket (Fixing Kit) Types

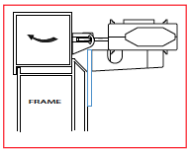

Open-out PVCu
See below for codes

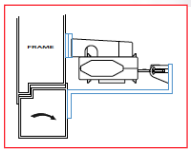

Bottom hung Open-in
See below for codes

COLOUR	STROKE	PART CODE	BOX QTY
White RAL9010	250mm	THL10000	40
Grey RAL9006	250mm	THL10001	40
Black RAL9005	250mm	THL10005	40

COLOUR	OPEN OUT	OPEN IN	BOX QTY
White	THL81000	THL82000	10
Grey	THL81001	THL82001	10
Black	THL81005	THL82005	10

T175 Locking Manual Openers Bottom Hung Open-In

Bottom Hung

This opener is ideally suited to bottom-hung windows fitted with butt hinges or 'Hopper- style casements that open inwards. It's small enough to fit snugly where space is limited between the reveal and moving frame. Because the moving sash is opened by the strength of the cable alone without the support of any conduit, this opener is better suited to small vents only.

- Works with the helical steel cable (THL41000)
- Used with the T250 or T300 operator on bottom-hung windows
- Maximum opening stroke 250mm
- Supplied with mounting brackets
- Available in white, grey and black

TIP: Operate multiple vents by linking locking openers using a rotary junction box.

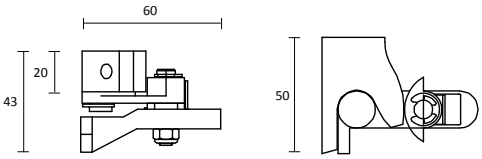

COLOUR	STROKE	PART CODE	BOX QTY
White	250mm	THL17500	10
Grey	250mm	THL17501	10
Black	250mm	THL17505	10

Compatible With

Midi Handle Operator
See Page 73

Maxi Handle Operator
See Page 74

Roof Vent Horizontal Pivot

SJ138600 Screw Jack Opener

This strong and rigid screw jack actuator gives great opening power, perfectly suited to single or multi-operation of banks of medium-sized (>500mm) and heavier casements. It's particularly useful for controlling the opening pitch of roof lights, as well as operating top-hung windows and horizontal pivoting windows. One thing to bear in mind is that, depending on the application, there can be a lot of spent travel to accommodate (see page 70). This will need taking into consideration with the positioning of the system.

- Sill-mounted screw jack used with T200 maxi handle
- High-powered opener strong enough for use on heavy casements
- Maximum opening stroke: 380mm
- Available in white

Compatible With

Maxi Handle Operator
See Page 74

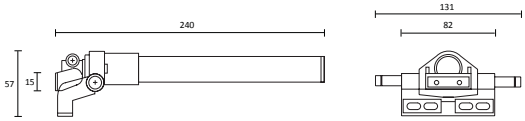

COLOUR	SIZE	PART CODE	BOX QTY
White	380mm	THL13860	25

Top Hung Bottom Hung Side Hung

T250 Manual Midi Operator with Handle

This midi window winder is a popular choice to operate manual window opening systems. Any spent travel (see page 70) is neatly and safely enclosed inside the casing, well away from prying fingers, making it ideal for use in schools and hospitals.

- Can only be used with the T100 and T175 manual openers due to restrictions on the amount of spent travel the casing can accommodate. This allows for a maximum opening of 250mm
- Includes T275 handle, T410 spent travel tube and T720 brass stop
- Remember to allow room for the handle to rotate through 360º (diameter of atleast 220mm)
- Use the brass stop included to set the opening size anywhere from 0-250mm
- Available in white, grey and black

Want a window opening wider than 250mm?
See either the Maxi or the Mini on page 74.

Compatible With

Chain Opener
See Page 72

Locking Manual Oeners
See Page 72

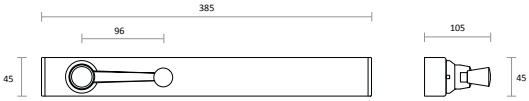

COLOUR	SIZE	MIDI	BOX QTY
White RAL9010	45 x 385mm	THL20000	20
Grey RAL9006	45 x 385mm	THL20001	20
Black RAL9005	45 x 385mm	THL20005	20

HIGHLINE WINDOW CONTROLS T200 Maxi Operators inc. Handles

Roof Vent | Top Hung | Bottom Hung | Side Hung | Horizontal Pivot

If you need to control multiple windows or vents with linked cable runs from a single window winder, or you need to work heavier casements, then this capable, robust manual operator is your best choice thanks to its powerful gearing and heavy-duty construction.

- Capable of operating multiple windows
- Heavy-duty metal case
- Compatible with the T100 chain opener and T175 locking manual opener
- Includes T275 handle and fixings
- Remember to allow room for the handle to rotate through 360º (diameter of atleast 220mm)
- Available in white, grey and black

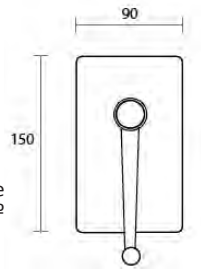

TIP: Operating multiple windows within Schools if the conduit is covered.

Compatible With

Chain Opener
See Page 72

Locking Manual Openers See Page 72

Scrrw Jack Oener
See Page 73

COLOUR	SIZE	MAXI	BOX QTY
White RAL9010	90 x 150mm	THL20010	1
Grey RAL9006	90 x 150mm	THL20011	1
Black RAL9005	90 x 150mm	THL20015	1

HIGHLINE WINDOW CONTROLS T300 Mini Operators inc. Handles

Top Hung | Bottom Hung | Side Hung

This compact metal-cased operator is capable of controlling single or several light windows. It's one of our most affordable options, although the spent cable is exposed, and this might be a consideration if the system is going to be installed in a school or public building.

- Compatible with the T100 chain opener and T175 locking manual opener
- Includes T275 handle and fixings
- Remember to allow room for the handle to rotate through 360º (diameter of atleast 220mm)
- Available in white, grey and black

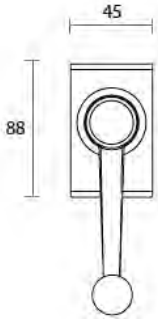

Need to control heavier roof vents?
Check out the powerful Maxi operator above.

Compatible With

Chain Opener
See Page 72

Locking Manual Oeners
See Page 72

Colour	Size	MINI	Box Qty
White RAL9010	45 x 88mm	THL20020	1
Grey RAL9006	45 x 88mm	THL20021	1
Black RAL9005	45 x 88mm	THL20025	1

Rotary Junction Box

Part of the Highline manual window controls range. This junction box connects drivers for satellite openers to the main conduit control system allowing multiple openers to be operated from a single winder. Available white, grey and black.

COLOUR	PART CODE	BOX QTY
White RAL9010	THL51000	1
Grey RAL9006	THL51001	1
Black RAL9005	THL51005	1

Cable Conduit 3 Metre

Works with the Highline manual window controls range. This plastic-covered metal tube protects the control cable that connects a window operator to a chain opener. It features a nylon lining for smooth operation and longer life. Supplied in 3-metre lengths. Available in white, grey and black finish.

COLOUR	SIZE	PART CODE	BOX QTY
White RAL9010	3m	THL40000	20
Grey RAL9006	3m	THL40001	20
Black RAL9005	3m	THL40005	20

Conduit End Cap

Works with the Highline manual window controls range. This moulded plastic conduit plug seals off the end of the conduit run which houses spent travel for a neat, fully enclosed finish. Available in white, grey and black finish.

COLOUR	PART CODE	BOX QTY
White RAL9010	THL83000	100
Grey RAL9006	THL83001	100
Black RAL9005	THL83005	100

Window Control Cable

This dry-lubricated helical cable runs inside the conduit to drive the window opener from the winder operator handle. Available in 1-metre lengths.

Remember to allow enough cable for spent travel

To allow for the forward/backward movement of the inner cable, a length of "spent travel" conduit must be fitted at either end of the control path i.e. past the last chain/screw jack and below the operator (except the T250 midi operator (see page 73) which has an integral "spent travel" tube).

TYPE OF OPERATOR	SPENT TRAVEL CONDUIT
SJ138600 Screw Jack	2.5m (for full 380mm travel)
T100 Chain Opener	0.3m

DESCRIPTION	SIZE	PART CODE	BOX QTY
Inner Cable	1m	THL41000	50m

3-Piece Conduit Saddle Bracket

Part of the Highline manual window controls range. This neat, 3-piece saddle bracket can be fitted to non-masonry surfaces such as window frames to hold the conduit for winding gear firmly in position. This helps to create a professional, tidy finish. Available in white, grey and black.

COLOUR	PART CODE	BOX QTY
White RAL9010	THL80000	100
Grey RAL9006	THL80001	100
Black RAL9005	THL80005	1

Plastic Conduit Saddle Bracket

Part of the Highline manual window controls range. This moulded plastic saddle bracket is quick and easy to fit straight to the window frame to secure the conduit for winding gear in place. Available in white, grey and black.

COLOUR	PART CODE	BOX QTY
White RAL9010	THL80010	10
Grey RAL9006	THL80011	10
Black RAL9005	THL80015	10

Cable Condiut Connector

This three-part metal connector is part of the Highline window controls range and is used to connect two lengths of conduit together to create a longer run of conduit. Each connector consists of a two-part metal sleeve and a plastic collar for a secure fit. Available in white, grey and black.

COLOUR	PART CODE	BOX QTY
White RAL9010	THL50000	10
Grey RAL9006	THL50001	10
Black RAL9005	THL50005	10

Swage Tool

This swage or conduit tool is an essential piece of kit for Highline window control systems. It's used to form the groove in the end of the conduit so it can be securely located into the ridges on the collar of the operator or opener.

DESCRIPTION	PART CODE	BOX QTY
Swage Tool	THL99999	10

Conduit Bend Former

If you're installing Highline manual window controls, you'll need this bend forming tool to create the ideal curve in your conduit with a radius of 90mm for smooth, unhindered cable travel.

DESCRIPTION	PART CODE	BOX QTY
Bend Former	THL99998	10

HIGHLINE® WINDOW CONTROLS

Window Types

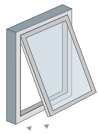

Top Hung
Awning

Bottom Hung
Hopper

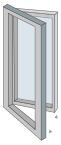

Side Hung
Casement

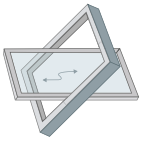

Horizontal
Pivot

Dome

Product Information

The Highline electric window controls range offers reliable, flexible and cost-effective systems to automate the opening of vents and high-level windows for natural ventilation. Natural ventilation improves the air quality of inside spaces by allowing clean, fresh air to enter the building while letting stale air out.

Our range of motorised single chain actuators are controllable from either a simple switch or a digital control panel with temperature, wind or rain activation. The 230V AC actuators featured in this brochure all run off standard mains electricity and are available from stock. 24V models for use in bathrooms and kitchens are also available by special order only.

Highlights of the range include the ever-popular ACK4 chain actuator (sometimes referred to as the MAC) with its 7 opening positions ranging between 100mm to 400mm and fitting brackets for most applications. Then there's the newer Micro EVO Actuator. Versatile enough to adapt to any application, it incorporates a synchronisation feature which lets you easily link several actuators together on the same window – perfect for operating wider casements.

We also have access to lots of other actuators and controls not shown in this brochure, so if you need something you can't see here, why not give our technical team a call on 01234 242724 to discuss your specific requirements.

Call sales on **01234 242724** to request your printed copy of our Highline Brochure & Order Form, or download PDF versions now at **windowware.co.uk/highline/literature/highline-window-controls-brochure**

ACK4 Chain Actuators 300N

If you want complete control over how far your vents open, then the ACK4 electric chain actuator gives no less than 7 different stroke positions from 100mm up to 400mm, so you can achieve your desired level of ventilation. With a strong die-cast aluminium casing, a robust double-link stainless steel chain and a maximum thrust force of 300N, the ACK4 actuator is a hard-working, reliable choice for your window control system.

- Suitable for use on most windows and lightweight roof vents and domes
- Adjustable opening stroke with 7 positions from 100-400mm
- Strong die-cast aluminium casing
- Robust double-link stainless steel chain
- High protection class IP 55 rated
- All electrical parts are double insulated
- Audible alarm sounds when installed incorrectly
- Supplied with 1.5m cable
- Brackets and fixings available to most applications (all sold separately
- Available in white

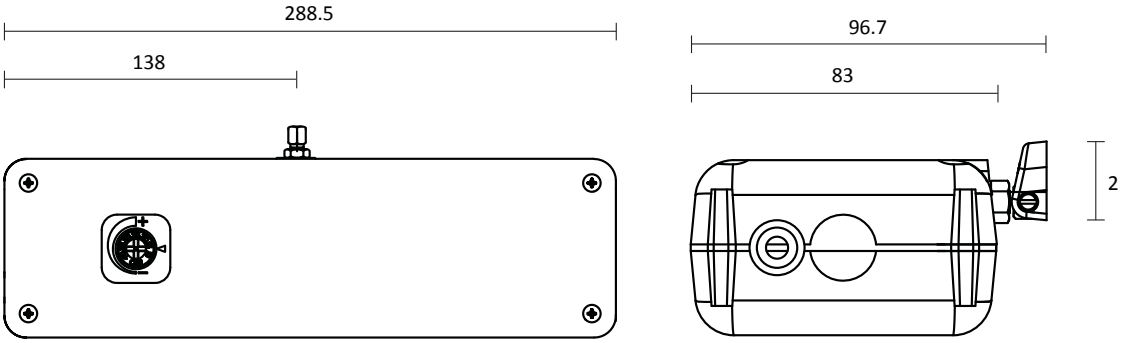

Technical Specifications

VOLTAGE	230VAC
STROKE	100-400mm
THRUST FORCE	300N
ABSORBED CURRENT	0.32A
SPEED	27mm/s
PROTECTION CLASS	IP55
FLEX	1.5m (3 CORE)
LIMIT STOP	Electronic
SAFETY STOP	Electronic
MAX WINDOW WIDTH	<1.5m

Accessories & Bracket Types

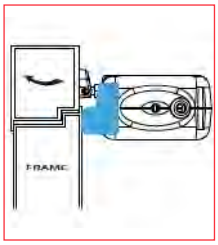

Standard for Ali
ELH30000

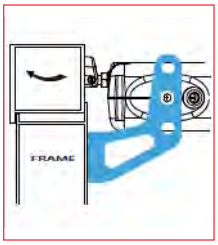

Large for PVCu
ELH30010

1 Gang Switch & Box
EHL20000

EX.PIN SIZE	STEP SIZE	PART CODE	BOX QTY
37mm	10-20mm	EHL40000	1
47mm	20-30mm	EHL40001	1
57mm	30-40mm	EHL40002	1

DESCRIPTION	COLOUR	SIZE	PART CODE	BOX QTY
Actuator	White	288.5 x 83 x 47.8mm	EHL10000	1
Bracket for Ali	White	Standard	ELH30000	1
Bracket for PVCu	White	Large	ELH30010	1

HIGHLINE® WINDOW CONTROLS

C30 Chain Actuators 330N

Top Hung | Bottom Hung | Side Hung | Horizontal Pivot | Dome

This single-chain actuator comes as standard with a selection of different brackets making it suitable for mounting onto top and bottom hung windows. It delivers a maximum push/pull thrust force of 300N which is sufficient to operate most windows, lightweight roof vents and domes. The opening stroke can quickly and easily be adjusted at 200mm or 380mm simply by turning a knob on the outside of the casing.

- Single chain actuator with 2 travel positions (200mm or 380mm)
- Strong composite casing
- All electrical parts are double insulated
- High protection class IP 30 rated
- Features a robust centrally positioned double-link stainless steel chain with a buzzer alarm that sounds in the event of incorrect installation
- Supplied with 1.5m cable
- Comes complete with C30/SB standard bracket and C30/BHB bottom hung bracket
- Available in white

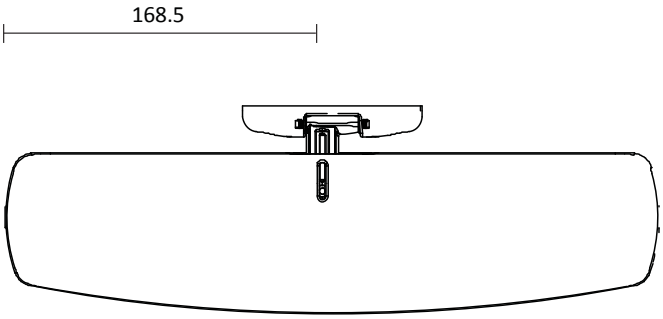

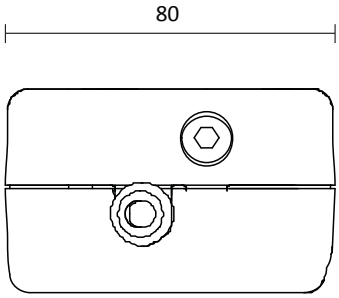

Accessories & Included Bracket Types

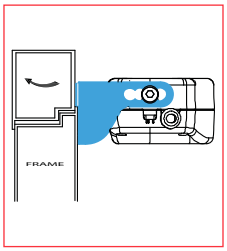

Standard

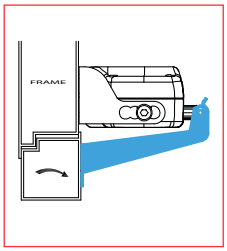

Bottom Hung

1 Gang Switch & Box EHL20000

Technical Specifications

VOLTAGE	230V AC
STROKE	200-380mm
THRUST FORCE	300N
ABSORBED CURRENT	0.26A
SPEED	27mm/s
PROTECTION CLASS	IP30
FLEX	1.5m (3 CORE)
LIMIT STOP	Electronic
SAFETY STOP	Electronic
MAX WINDOW WIDTH	<1.5m

DESCRIPTION	COLOUR	SIZE	PART CODE	BOX QTY
Actuator	White	337 x 80 x 49 mm	EHL10020	1

Micro EVO Acuator 230v

HIGHLINE WINDOW CONTROLS

If you need high-level electric window controls for a wide casement, then the Micro EVO actuator is just the job. Its integrated synchronisation function means you can easily link up as many as 4 actuators to work together on single window on site and straight out of the box - no need for a separate sync module.

- 4 selectable opening strokes (100-400mm)
- Suitable for most window types and roof vents
- Soft-stop closing for reduced wear on the window frame and actuator
- All electrical parts are double-insulated - Class II AC version – Class III DC version.
- Aluminium casing
- High protection class IP 32 rated
- Double-link chain with anti-corrosion treatment
- Can be easily synced on site to work as a group of up to 4 actuators on wider casements
- Supplied with standard and bottom hung quick-release fixing brackets

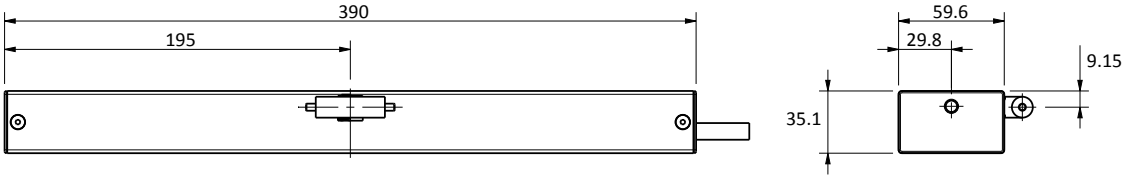

Technical Specifications

VOLTAGE	230V AC
STROKE (SELECTABLE)	100-200-300-400mm
THRUST FORCE	300 N
ABSORBED CURRENT	-
SPEED	12.5mm/s
PROTECTION CLASS	IP 32
FLEX	1.5m (3 CORE)
LIMIT STOP	-
SAFETY STOP	Yes
MAX WINDOW WIDTH	<1.5m

Included Bracket Types

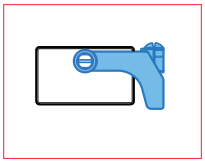

Standard

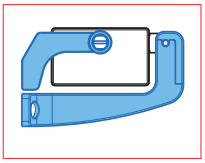

Bottom Hung

Accessories

1 Gang Switch & Box
See Page 82

Large Bracket
EHL31010

DESCRIPTION	COLOUR	SIZE	PART CODE	BOX QTY
EVO Actuator	White RAL9003	390 x 35 x 59mm	EHL10010	1
Additional Bracket	White	Large	EHL31010	1

1 Gang Switch & Box

This S50-1 Rocker switch is part of the Highline electric window controls range and can be used to control the open/close operation of both 230V AC actuators and 24V DC actuators (via 24V DC controllers) which are available by special order.

- 2-way centre off retractive switch
- 10 Amp (max)
- 1-Gang (2-Gang, 3-Gang and 4-Gang versions available upon request)
- Controls the movement of 230V AC window actuators (or 24V DC controllers if required)
- Supplied with surface-mounted box
- Dimensions: 86 x 86 x 28mm

COLOUR	PART CODE	BOX QTY
White	EHL20000	1

Control Unit For Natural Ventilation Window Controls

Rain

Temperature

Manual Override

This compact window control unit is a great way to automatically achieve natural ventilation and ensure a more comfortable environment in stuffy rooms or stifling conservatories. With the digital display, it's quick and easy to program the system to automatically open and close windows or roof vents to achieve a specific room temperature, as well as ensure windows are shut and watertight whenever it rains.

- Control unit for 230V AC Window actuators (max output 8 Amp)
- Automatically opens windows if room gets too hot and closes them according to temperature or when it rains.
- Rain sensor and temperature sensor included
- Digital display for simple programming of the desired room temperature
- High protection class IP 4X rated
- Open and close buttons on front of control panel for direct control

Technical Specifications

VOLTAGE	230V AC
OUTPUT CURRENT	8A
PROTECTION CLASS	IP 4X
DIMENSIONS	146 x 86 x 28mm
INPUTS	Rain Sensor, Temperature Probe

Additional Included Items

Rain Sensor

Temperature Probe

COLOUR	SIZE	PART CODE	BOX QTY
White	230v	EHL40010	1

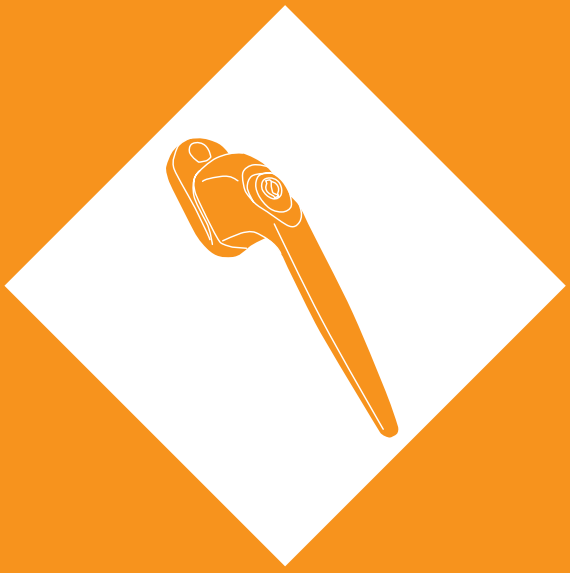

Tilt Before Turn Handles	**84**
Trojan	84
Hoppe	84
Tilt Before Turn Gear	**85-89**
GU UNI-JET	85
MACO Face Fix or Concealed	86-89
Tilt Before Turn Restrictors	**90**
MACO	90

Have you tried our online tilt and turn kit generator?

We've made ordering tilt and turn kits easy with our online kit generator. Just login to your trade account at **windowware.co.uk** to get started. Simply enter the required details to generate a kit in seconds!

TROJAN
...The Strength of Hardware Design

Trojan TBT Handle

10 YEARS MECHANICAL GUARANTEED FOR 10 YEARS

- Positive engagement at 90° intervals
- A push fit cover is included with every handle to make the handle non-locking
- Available in white, chrome and gold
- Black and silver available as a special order, please contact our Sales Office for details
- 10 year mechanical guarantee

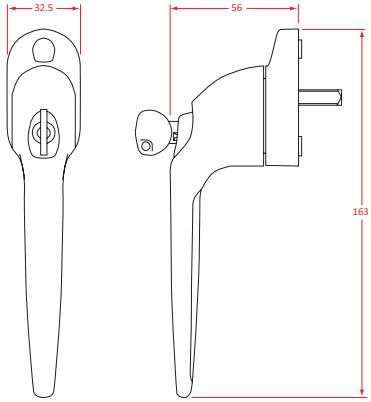

SPINDLE	WHITE	CHROME	SATIN	GOLD	BOX QTY.
30mm	TBT11000	TBT11002	-	TBT11009	10
50mm	TBT11010	TBT11012	TBT11011	TBT11019	10

HOPPE®
Handle of excellence.

Atlanta TBT Handle

Tilt-Safe mechanism

- Range of tilt and turn handles designed to suite with the Atlanta door handle sets
- Positive engagement at 90° intervals
- Built in Tilt-Safe* mechanism controlled by the key
- Available in white, silver, chrome, black, polished brass, and gold finishes

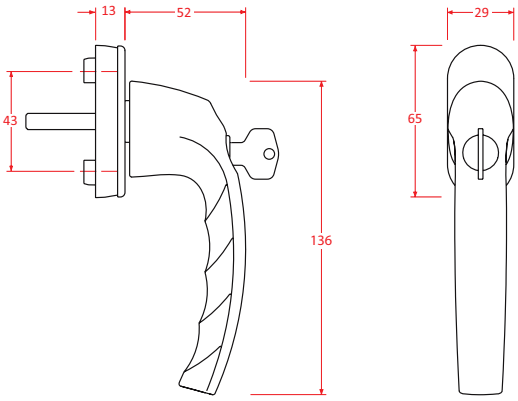

Tilt-Safe
- The Tilt Safe facility allows the window to enter tilt mode when the handle is locked
- The handle will not go past the tilt position without the key
- This gives the handle a child-safe feature whilst allowing airflow through the window

SPINDLE	WHITE	SILVER	CHROME	BLACK	POLISHED BRASS	GOLD	BOX QTY.
30mm	TBT80000	TBT80001	TBT80002	TBT80005	TBT80008	-	10
38mm	TBT80010	TBT80011	TBT80012	-	-	TBT80019	10

280-1600mm
MIN/MAX
Sash rebate width

280-2800mm
MIN/MAX
Sash rebate height

130kg
MAX

GU UNI-JET Tilt & Turn Hardware Range

GU UNI-JET tilt & turn gearing works hard for fabricators, fitters and users alike. This flexible, universal system is suitable for most window frame materials and applications and supports both manual and machine-based manufacturing processes.

Renowned German engineering combined with intelligent design and compact packaging means your tilt & turn hardware takes up less space in your stock room, plus it's simple to fit and fine-tune. What's more, ultra-smooth operation, excellent tolerances and advanced corrosion resistance all adds up to fewer call-backs too!

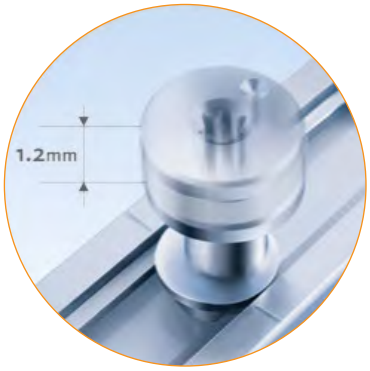

Universal and fitter-friendly

- Options for PVCu, aluminium and timber windows
- Precision-engineered - suitable for manual or automated fabrication
- Single universal central locking system can be adapted to suit all applications
- High-security version available by special order
- Fewer components results in faster fabrication and reduced stock-holding
- '**Cleverle**' mushroom cam automatically compensates for clearance tolerances and is easily adjusted with a Torx key
- Smart, space-saving packaging
- Choose from face-fix (**GU UNI-JET D**) or fully concealed (**GU-UNI-JET SC**) systems

Enduring practicality

- Super-smooth operation even on large or reinforced windows
- Sash lifter reduces component wear and abuse while ensuring an effortless close action
- Integrated anti-slam device keeps sash in tilt position even in windy conditions
- GU FerGuard silver finish: high-grade corrosion protection salt spray tested to 576 hours
- 10-year mechanical guarantee

Contact sales on 01234 242724 to find out more and build your system

MULTI-MATIC - Face Fix
Tilt Before Turn

10 year warranty

80kg MAX

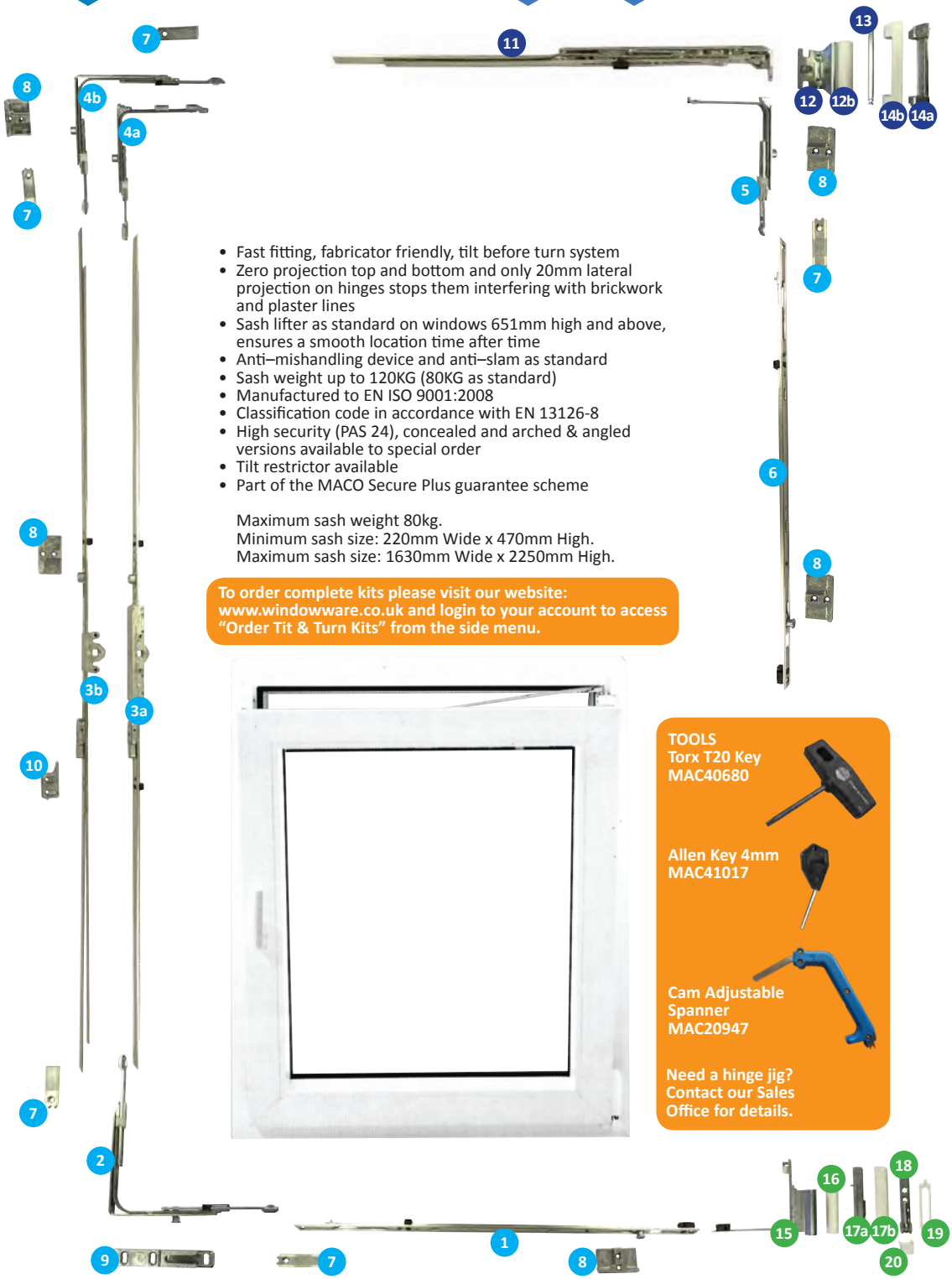

- Fast fitting, fabricator friendly, tilt before turn system
- Zero projection top and bottom and only 20mm lateral projection on hinges stops them interfering with brickwork and plaster lines
- Sash lifter as standard on windows 651mm high and above, ensures a smooth location time after time
- Anti–mishandling device and anti–slam as standard
- Sash weight up to 120KG (80KG as standard)
- Manufactured to EN ISO 9001:2008
- Classification code in accordance with EN 13126-8
- High security (PAS 24), concealed and arched & angled versions available to special order
- Tilt restrictor available
- Part of the MACO Secure Plus guarantee scheme

Maximum sash weight 80kg.
Minimum sash size: 220mm Wide x 470mm High.
Maximum sash size: 1630mm Wide x 2250mm High.

To order complete kits please visit our website: www.windowware.co.uk and login to your account to access "Order Tit & Turn Kits" from the side menu.

TOOLS
Torx T20 Key
MAC40680

Allen Key 4mm
MAC41017

Cam Adjustable Spanner
MAC20947

Need a hinge jig? Contact our Sales Office for details.

	DESCRIPTION	SASH REBATE WIDTH	SASH REBATE HEIGHT	REQUIRED KEEPS	PART CODE	BOX QTY.
1	Centre Lock	601-1300mm 1301-1630mm	801-1250mm 1251-2250mm	1 1	MAC201751 MAC201752	20 20
2	Bottom Corner Element with iS Cam	220-1630mm	-	1	MAC222201	50
3	Sash Lifter Drive Gear					
3a	**6.5mm** Backset	- - - -	530-800mm 801-1250mm 1251-1750mm 1751-2250mm	- 1 2 3	MAC202491 MAC202492 MAC202494 MAC202205	20 20 20 20
3b	**15mm** Backset	- - - -	470-800mm 801-1250mm 1251-1750mm 1751-2250mm	- 1 2 3	MAC201746 MAC212156 MAC212158 MAC212160	20 20 10 10
4	Top Front Corner Element					
4a	Short	220-320mm	470-2250mm	1	MAC211975	50
4b	Standard	321-1300mm	470-2250mm	1	MAC211974	50
5	Centre Lock Back Corner Element	-	470-2250mm	1	MAC211976	50
6	Centre Lock	601-1300mm 1301-1630mm	801-1250mm 1251-2250mm	1 1	MAC201751 MAC201752	20 20
7	Adapter Pieces	-	-	-	MAC352980	100
	Profile Related Keeps - for details please contact our technical department.					
8	Cam Keeps	-	-	-	PROFILE RELATED	200
9	Tilt First Keep	-	-	-	PROFILE RELATED	100
10	Sash Lifter Keep	-	-	-	PROFILE RELATED	100

	TOP HINGE 80KG MAX SASH WEIGHT	SASH REBATE WIDTH		REQUIRED KEEPS	PART CODE	BOX QTY.
11	Rebated Scissor Stay	220-400mm 401-600mm 601-629mm 630-800mm 801-1050mm 1050-1300mm		- - - 1 1 1	MAC212077 MAC212078 MAC212079 MAC212080 MAC212081 MAC212082	10 10 10 10 10 10
		REBATE	EUROGROOVE	FINISH		
12a	Stay Arm Support	20mm 20mm	9mm 13mm	White White	MAC54799 MAC55009	100 100
12b	Stay Arm Support Cover	- -	- -	Brown Black	MAC42192 MAC42193	100 100
13	Top Hinge Pin	-	-	-	MAC94491	200
14a	Top Hinge Frame Bracket	-	-	-	MAC52480	100
14b	Top Hinge Frame Bracket Cover	- - -	- - -	White Brown Black	MAC42083 MAC42189 MAC42190	100 100 100

	BOTTOM HINGE 80KG MAX SASH WEIGHT	REBATE	EURO-GROOVE	HANDING	FINISH	PART CODE	BOX QTY.
15	Eurogroove Fitting	20mm 20mm 20mm 20mm	9mm 9mm 13mm 13mm	Left Hand Right Hand Left Hand Right Hand	- - - -	MAC54891 MAC54890 MAC54893 MAC54892	100 100 100 100
16	Eurogroove Fitting Cover	- - - - - -	- - - - - -	Left Hand Right Hand Left Hand Right Hand Left Hand Right Hand	White White Brown Brown Black Black	MAC41741 MAC41740 MAC42598 MAC42599 MAC43519 MAC43518	100 100 100 100 100 100
17a	Face–mounted Square Edge Sash Hinge	-	-	-	-	MAC52478	100
17b	Face–mounted Square Edge Sash Hinge Cover	- - -	- - -	- - -	White Brown Black	MAC42087 MAC42186 MAC42187	100 100 100
18	Pivot Post	-	-	-	-	MAC52483	100
19	Pivot Post Screw Cover	- - -	- - -	- - -	White Brown Black	MAC41743 MAC42208 MAC42209	100 100 100
20	Pivot Post Bottom Cover	- - -	- - -	- - -	White Brown Black	MAC41742 MAC42195 MAC42196	100 100 100

MULTI-POWER - Concealed Tilt Before Turn

10 year warranty

130kg MAX

- Concealed (Invisible) - for flush and rebated window systems
- Can be used with the existing MACO MULTI TREND and MACO MULTI-MATIC central locking systems
- Increased burglar resistant security in the hinge area
- Prevents thermal bridges. Perfect impermeability
- No cover caps necessary
- Lateral adjustment of stay hinges and pivot posts without loosening screws
- Three-dimensional adjustments of the pivot post
- Integrated adjustment of the opening angle (90° or 95°)
- Designed for 9mm and 13mm fittings Axis (Eurogroove)
- High security (PAS 24) also available to special order
- Part of the MACO Secure Plus guarantee scheme

Maximum sash weight 130kg.
Minimum sash sizes: 370wmm Wide x 470mm High.
Maximum sash sizes:1630mm Wide x 2250mm High.

To order complete kits please visit our website: www.windowware.co.uk and login to your account to access "Order Tit & Turn Kits" from the side menu.

TOOLS

Torx T20 Key
MAC40680

Allen Key 4mm
MAC41017

Cam Adjustable Spanner
MAC20947

Need a hinge jig? Contact our Sales Office for details.

	DESCRIPTION	SASH REBATE WIDTH	SASH REBATE HEIGHT	REQUIRED KEEPS	PART CODE	BOX QTY.
1	Centre Lock	801-1280mm 1281-1400mm	801-1250mm 1251-2250mm	1 1	MAC201751 MAC201752	20 20
2	Bottom Corner Element with iS Cam	370-1400mm	-	1	MAC222201	50
3	Sash Lifter Drive Gear					
3a	**6.5mm** Backset	- - - -	530-800mm 801-1250mm 1251-1750mm 1751-2250mm	- 1 2 3	MAC202491 MAC202492 MAC202494 MAC202205	20 20 20 20
3b	**15mm** Backset	- - - -	470- 800mm 801-1250mm 1251-1750mm 1751-2250mm	- 1 2 3	MAC201746 MAC212156 MAC212158 MAC212160	20 20 10 10
4	Top Front Corner Element					
4a	Short	370-489mm	470-2250mm	1	MAC211975	50
4b	Standard	490-1400mm	470-2250mm	1	MAC211974	50
5	Centre Lock Back Corner Element	-	801-2250mm	1	MAC211976	50
6	Centre Lock	601-1300mm 1301-1630mm	801-1250mm 1251-2250mm	1 1	MAC201751 MAC201752	20 20
7	Adapter Pieces	-	-	-	MAC352980	100
	Profile Related Keeps - for details please contact our technical department.					
8	Cam Keeps	-	-	-	PROFILE RELATED	200
9	Tilt First Keep	-	-	-	PROFILE RELATED	100
10	Sash Lifter Keep	-	-	-	PROFILE RELATED	100

	TOP HINGE 130KG MAX SASH WEIGHT	SASH REBATE WIDTH	HANDING	REQUIRED KEEPS	PART CODE	BOX QTY.
11	Scissor Stay Faceplate					
	600 800 1050 1300	370-600mm 601-800mm 601-800, 1301-1390mm 1051-1300, 1391-1400mm	- - - -	- - 1 1	MAC217346 MAC217347 MAC217348 MAC217349	20 20 20 20
12	Scissor Stay Arm					
	9mm Eurogroove	370- 800mm 370- 800mm 801-1400mm 801-1400mm	Right Hand Left Hand Right Hand Left Hand	- - - -	MAC217492 MAC217493 MAC217496 MAC217497	10 10 10 10
	13mm Eurogroove	370- 800mm 370- 800mm 801-1400mm 801-1400mm	Right Hand Left Hand Right Hand Left Hand	- - - -	MAC217494 MAC217495 MAC217498 MAC217499	10 10 10 10
13	Profile Related Hinge Packer - Top. For details please contact our technical department.				PROFILE RELATED	100

	BOTTOM HINGE 130KG MAX SASH WEIGHT	SASH REBATE WIDTH	HANDING		PART CODE	BOX QTY.
14	Frame Fixing Bottom Hinge Invisible Pivot Post					
	9mm Eurogroove	385-1300mm 385-1300mm	Right Hand Left Hand	- -	MAC215816 MAC215817	20 20
	13mm Eurogroove	385-1300mm 385-1300mm	Right Hand Left Hand	- -	MAC215814 MAC215815	20 20
15	Pivot Post Bottom Hinge Cover	- -	Right Hand Left Hand	- -	MAC364500 MAC364501	20 20
16	Corner Support					
	9mm Eurogroove	- -	Right Hand Left Hand	- -	MAC215806 MAC215807	20 20
	13mm Eurogroove	- -	Right Hand Left Hand	- -	MAC215804 MAC215805	20 20
17	Screws for Hinges	-	-	-	MAC362918	500
18	Profile Related Hinge Packer - Bottom. For details please contact our technical department.				PROFILE RELATED	100

Multivent Ventilation Tilt Before Turn Restrictor

- Suitable for left- and right-handed applications
- Controls the amount of fresh air entering through the window
- Remains engaged in both tilt and turn modes, although is not suitable as a safety restrictor in the turn mode

WHITE	BOX QTY.
MAC12360	20

Locking Turn Function Tilt Before Turn Restrictor

- Key lockable face fixed restrictor
- Once locked, the window will only be able to tilt and will need to be un-locked to be able to turn
- Available from stock in white

WHITE	BOX QTY.
MAC12069	20

Turn Restrictor

- Can be fitted to existing tilt and turn gearing and is generally fitted to the top corner element
- When you operate the handle to move the tilted window into the turn position, the restrictor will block the locking cams, thereby stopping the window from entering the turn position

PART CODE	BOX QTY.
MAC357081	200

First time fabricating MACO tilt before turn? Make sure you order jigs & our handy wall chart via our sales office.

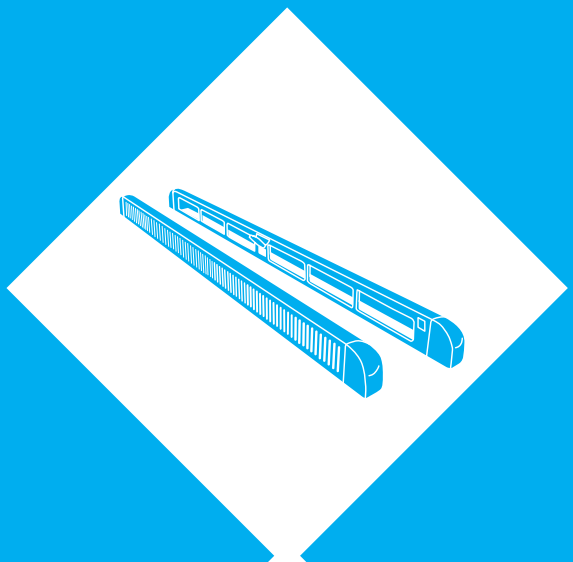

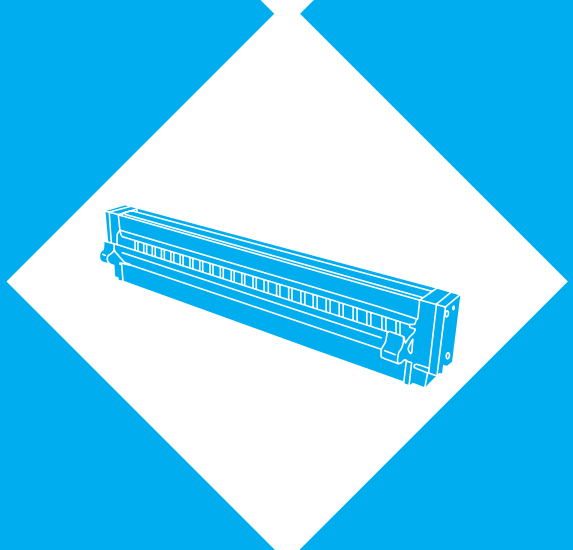

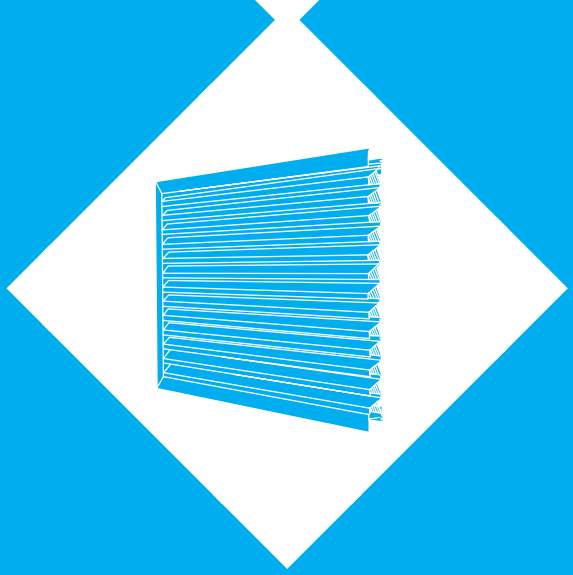

Trickle Vents	**93-99**
Glazpart	93
Greenwood	94-97
RW Simon	97-99
Acoustic Vents	**100-101**
Greenwood	100-101
RW Simon	101
Louvres	**102-103**
DUCO	102-103
Glazed-in Vents	**104-106**
RW Simon	104-106

Design Performance Criteria

This information was kindly supplied by Greenwood

System 1

Background Ventilators and Intermittent Extract Fans

The Approach:

- Traditional 'room based' ventilation
- Extract fans located in all wet rooms including bathroom, kitchen, utility & WC
- Background ventilators located in all rooms

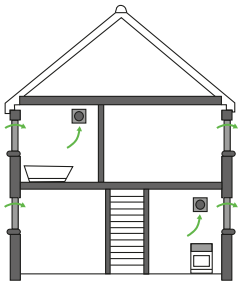

What's new for ADF 2010?

Background Ventilation

Whilst the mechanical intermittent extract rates per room remain unchanged, background ventilation rates have been increased by up to 40% for the default infiltration design criteria (< 5ach @ 50Pa)

Key increase mm²	5000
Increases from the requirements of ADF 2006	10000
	15000
	20000

Table 5.2a

Total equivalent ventilator area [a] (mm²) for dwellings with any design air permeability leakier than (<) 5m³/(h.m²)@50Pa					
Total floor area (m²)	Number of bedrooms[b]				
	1	2	3	4	5
<50	35000	40000	50000	60000	65000
51-60	35000	40000	50000	60000	65000
61-70	45000	45000	50000	60000	65000
71-80	50000	50000	50000	60000	65000
81-90	55000	60000	60000	60000	65000
91-100	65000	65000	65000	65000	65000
>100	Add 7000 mm² for every additional 10 m² floor area				

Notes:

a. The equivalent area of a background ventilator should be determined at 1 Pa pressure difference, using the appropriate test method given in Table 5.3.

b. This is based on two occupants in the main bedroom and a single occupant in all other bedrooms. For a greater level of occupancy, assume a greater number of bedrooms (i.e. assume an extra bedroom per additional person). For more than five bedrooms, add an additional 10000mm² per bedroom.

What's the impact?

In both apartments and houses, the increased background ventilation rates may result in this ventilation system being unable to be installed effectively. This is especially relevant to apartments with single facades that require background ventilators at both the top and bottom of the window to ensure cross ventilation.

Refer to ADF 2010 for full details.

Example 1:

2 Bedroom Apartment 65m²

- Dual façade with total of 3 windows
- 45000mm² equivalent area = 15,000mm² per window

This is a high performance to achieve over a small number of windows. Based on the ventilators available in the market, there are likely to be 3 vents per window to be installed and therefore may not be achievable within the window sizes. Remember: Single façade also requires ventilation at BOTH top and bottom of the window. The requirement for the dwelling would increase to 90000mm² (30,000mm² per window).

Example 2:

4 Bedroom Property 95m²

- Total of 9 windows
- 65,000mm² equivalent area = 7222mm² per window

With a higher number of windows, the background ventilation requirements may easily be met, however may still result in 2 or 3 vents per window needing to be installed.

registered LABC

51 dB — 2500 vent when closed

38 dB — 2500 vent when open

High Air Flow — 2500mm² EQA 2512mm² Free Area

Link Vents Mk2

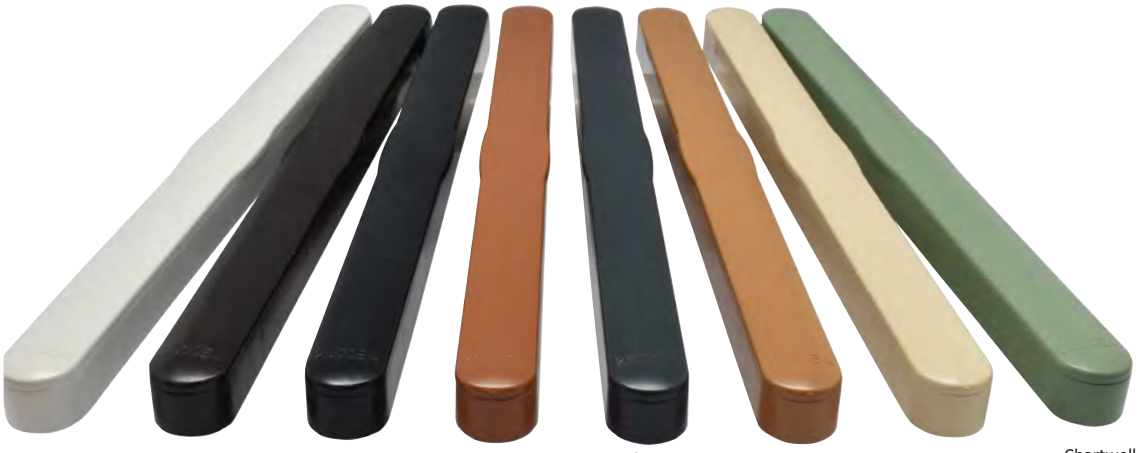

White | Brown | Black | Tan | Anthracite Grey RAL7016 | Irish Oak | Cream RAL1015 | Chartwell Green

- Compact, low-visibility design - canopy extends just 25mm from the window
- Wide choice of solid colours. RAL colour matching and woodgrain finishes also available
- Optimised airflow means the 2500 vent achieves the performance of a vent twice its size
- Small 204mm x 13mm slot reduces routing time and keeps noise levels to a minimum - just 51dB for the 2500 vent in the closed position
- LABC approved guarantees compliance with building regulations
- Can be either screw- or clip fixed for a quick, easy fit
- Robust, sturdy design - no end caps to lose or break
- High thermal performance and excellent colourfastness
- Improved airflow means the vent is smaller and can be fitted in sashes

PLAIN DUAL COLOURS, INTERNAL COLOUR WHITE, EXTERNAL COLOUR DIFFERENT.							
Internal Finish	WHITE	WHITE	WHITE	WHITE	WHITE	WHITE	WHITE
External Finish	BROWN	BLACK	TAN	ANTHRACITE GREY RAL7016	IRISH OAK	CREAM RAL1015	CHARTWELL GREEN
2500 size	GTV205101	GTV205102	GTV205105	GTV205110	GTV205111	GTV205114	GTV205115
Box Qty.	50 sets	50 sets	50 sets	50 sets	50 sets	50 sets	50 sets

PLAIN COLOURS, SAME COLOUR BOTH SIDES.								
Internal & External Finish	WHITE	BROWN	BLACK	TAN	ANTHRACITE GREY RAL7016	IRISH OAK	CREAM RAL1015	CHARTWELL GREEN
2500 size	GTV201500	GTV201501	GTV201502	GTV201505	GTV201510	GTV201511	GTV201514	GTV201515
Box Qty.	50 sets	50 sets	50 sets	50 sets	50 sets	50 sets	50 sets	50 sets

SF Coloured Slotvent

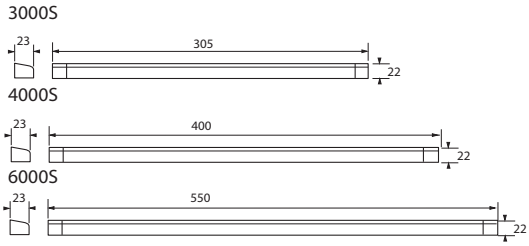

- Up to 4200mm² equivalent area
- Selection of exterior colour finishes
- Upward and downward air deflection options
- Widely specified within the social sector
- Suitable for installation with sleeves that help improve window integrity
- F = front opening
- 2 year guarantee

VENT SIZE (mm)	AIR FLOW (mm²) INTERNAL	AIR FLOW (mm²) EXTERNAL	SLOT SIZE LENGTH-GAP-LENGTH (mm) INTERNAL	SLOT SIZE LENGTH-GAP-LENGTH (mm) EXTERNAL
305	1800	2500	243	265
400	2700	3200	163-15.5-163	157-10-175
550	3400	4200	243-15.5-243	250-10-250

PLAIN DUAL COLOURS, INTERNAL COLOUR WHITE, EXTERNAL COLOUR DIFFERENT.

Internal Finish	WHITE	WHITE	WHITE	WHITE	WHITE	WHITE	WHITE	WHITE	WHITE
External Finish	OAK	LIGHT IVORY	CREAM	SLATE GREY	ANTHRACITE GREY RAL7016	CHARTWELL GREEN	SILVER GREY	BLACK BROWN	BROWN
3000S	-	VEN37014	VEN37013	VEN37015	VEN10011	-	VEN37018	VEN37019	-
4000S	VEN47012	VEN47014	VEN47013	VEN47015	VEN47016	VEN47017	VEN47018	VEN47019	VEN49013
Box Qty.	50 sets	50 sets	50 sets	50 sets	50 sets	50 sets	50 sets	50 Sets	50 Sets

PLAIN COLOURS, SAME COLOUR BOTH SIDES.

Internal & External Finish	WHITE	BRILLIANT WHITE	ANTHRACITE GREY RAL7016	IVORY	SILVER GREY	OAK	BROWN
3000S	VEN10001	VEN10001B	-	-	-	VEN10081	VEN10091
4000S	VEN40003	VEN40001B	VEN46000	VEN47004	VEN47004	VEN48003	VEN49003
6000S	VEN40004	-	-	-	-	-	VEN49004
Box Qty.	50 sets	50 sets	50 sets	50 sets	50 sets	50 sets	50 sets

SB Slotvent

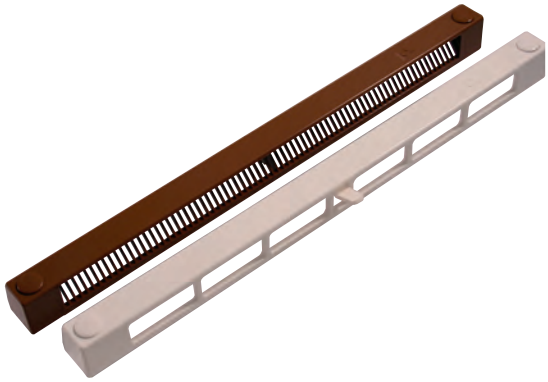

Bottom operation (SB)

Pull cord operation

3000S

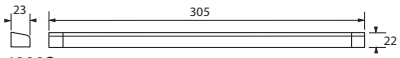

4000S

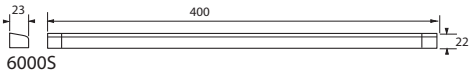

6000S

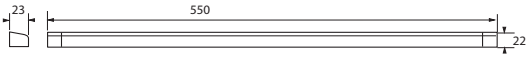

- Up to 4200mm² equivalent area
- Selection of control options
- Upward and downward air deflection options
- Widely specified within the social sector
- Suitable for installation with sleeves that help improve window integrity
- B = bottom opening
- 2 year guarantee

VENT	AIR FLOW (mm²)		SLOT SIZE LENGTH-GAP-LENGTH (mm)	
SIZE (mm)	INTERNAL	EXTERNAL	INTERNAL	EXTERNAL
305	1800	2500	243	265
400	2700	3200	163-15.5-163	157-10-175
550	3400	4200	243-15.5-243	250-10-250

PLAIN COLOURS								
Internal Finish	WHITE	WHITE	WHITE	WHITE	WHITE	BLACK	OAK	BROWN
External Finish	WHITE	WHITE	BLACK	OAK	BROWN	BLACK	OAK	BROWN
Operation	Pull Cord	Bottom	Bottom	Bottom	Bottom	Bottom	Bottom	Bottom
3000S	VEN2000SPC	VEN30001	VEN25015	VEN28011	VEN29011	VEN25005	-	VEN29001
4000S	VEN4000SPC	VEN40001	VEN48015	VEN48011	VEN49011	VEN45001	VEN48001	VEN49001
Box Qty.	50 sets	50 sets	50 sets	50 sets	50 sets	50 sets	50 sets	50 sets

LB Slotvent

- Slimline design for low profile window frames
- Up to 3200mm² equivalent area
- Bottom operation
- Small 10mm rout
- 2 year guarantee

2000L internal

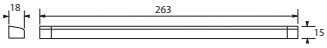

4000L internal

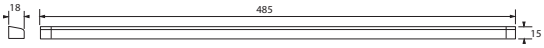

VENT	AIR FLOW (mm²)		SLOT SIZE (LENGTH-GAP-LENGTH) (mm)	
SIZE (mm)	INTERNAL	EXTERNAL	INTERNAL	EXTERNAL
263	1600	1600	203	203
485	3200	3200	203-20-203	203-10-203

PLAIN COLOURS							
Internal Finish	WHITE	BRIGHT WHITE	WHITE	WHITE	BLACK	OAK	BROWN
External Finish	WHITE	BRIGHT WHITE	OAK	BROWN	BLACK	OAK	BROWN
263	VEN20002	VEN20002B	VEN28012	VEN29012	-	VEN29014	VEN29002
485	VEN40002	-	-	-	VEN45002	VEN48002	VEN49002
Box Qty.	50 sets	50 sets	50 sets	50 sets	50 sets	50 sets	50 sets

F Slotvent Clip Fit Vent

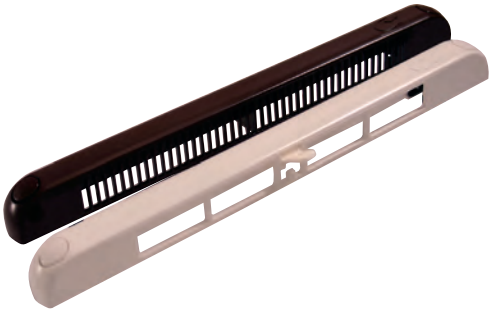

- The F vent is clip-fit and therefore offers savings in installation time
- The clip has been designed to fit securely to a range of profile depths and is provided already installed in the ventilator body
- Slimline, unobtrusive finish on profile when installed
- Up to 2634mm² equivalent area
- 2 year guarantee

1250FB

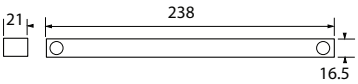

2500FB

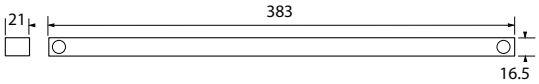

VENT	AIR FLOW (mm²)		SLOT SIZE (LENGTH-GAP-LENGTH) (mm)	
SIZE (mm)	INTERNAL	EXTERNAL	INTERNAL	EXTERNAL
238	1342	1362	192	194
383	2583	2634	163.5-10-163.5	164.5-10-164.5

PLAIN COLOURS					
Internal Finish	WHITE	WHITE	WHITE	OAK	BROWN
External Finish	WHITE	TAN	BROWN	OAK	BROWN
238	VEN12500	VEN12518	VEN12512	VEN12508	VEN12502
383	VEN25000	VEN25018	VEN25012	VEN25008	VEN25002
Box Qty.	50 sets	50 sets	50 sets	50 sets	50 sets

HF Framevents

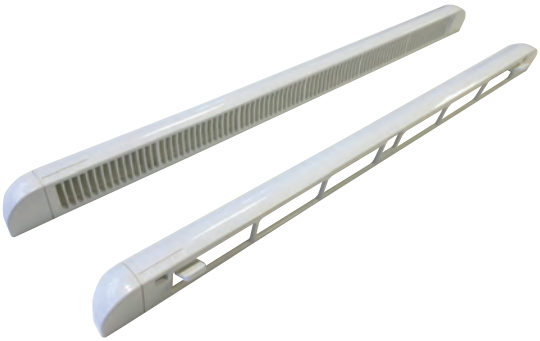

- 5000mm² EA on a ventilator of only 420mm long, for easy compliance with Approved Document F 2006
- Can be fitted to deflect the incoming air upwards or downwards
- Manufactured in the highest quality U.V. stabilised PVCu
- Durable, easy to fit and fully tested
- Tested in accordance with BS EN 1026:2000 & BS EN 1027: 2000 weather performance
- Tested in accordance with BS EN 13141-1 :2004 for Equivalent Area
- Integral flyscreen in external hood

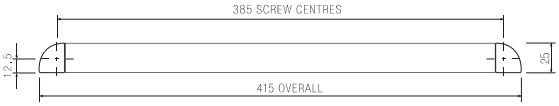

VENT	AIR FLOW (mm²)		SLOT SIZE (LENGTH-GAP-LENGTH) (mm)	
SIZE (mm)	INTERNAL	EXTERNAL	INTERNAL	EXTERNAL
420	5000	5000	340	340

PLAIN COLOURS	
Internal Finish	WHITE
External Finish	WHITE
420	RWS5000HF
Box Qty.	50

Framevents

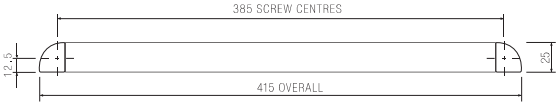

- Ideal for both timber & PVCu
- Manufactured from UV stabilised PVCu
- Positive open and close action
- Intergral fly screen in external hood
- Provides equivalent air flow rate of 2500mm² EA

VENT	AIR FLOW (mm²)		SLOT SIZE (LENGTH-GAP-LENGTH) (mm)	
SIZE (mm)	INTERNAL	EXTERNAL	INTERNAL	EXTERNAL
300	2500	2500	245	245
400	2500	2500	365	365
595	5000	5000	245-35-245	245-35-245
795	5000	5000	330-35-330	330-35-330

PLAIN DUAL COLOURS, INTERNAL COLOUR WHITE, EXTERNAL COLOUR DIFFERENT.				
Internal Finish	WHITE	WHITE	WHITE	WHITE
External Finish	BLACK	TAN	BROWN	GREY
300	RWS251515	RWS251518	RWS251519	RWS250006
400	RWS250015	RWS250018	RWS250019	RWS250016
Box Qty.	50 sets	50 sets	50 sets	50 sets

PLAIN COLOURS						
Internal Finish	WHITE	BRIGHT WHITE	CREAM	TAN	BROWN	BLACK
External Finish	WHITE	BRIGHT WHITE	CREAM	TAN	BROWN	BLACK
300	RWS251500	RWS251500B	RWS251503	RWS251508	RWS251509	RWS251505
400	RWS250000	RWS250000B	RWS250003	RWS250008	RWS250009	RWS250005
595	RWS501500	-	-	-	-	-
795	RWS500000	-	-	-	-	-
Box Qty.	50 sets	50 sets	50 sets	50 Sets	50 Sets	50 Sets

2500 mm² EQA

TTF Slimline Through-Frame Ventilator

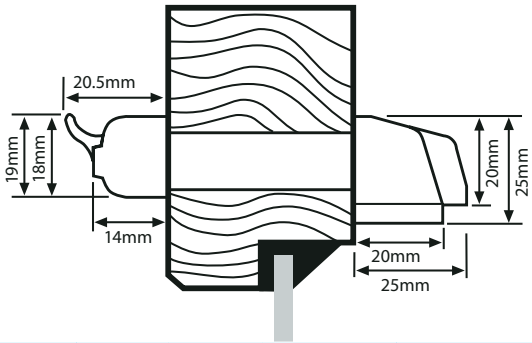

VENT	AIR FLOW (mm²)		SLOT SIZE (LENGTH-GAP-LENGTH) (mm)	
SIZE (mm)	INTERNAL	EXTERNAL	INTERNAL	EXTERNAL
300	2500	2500	265	265
375	2500	2500	345	345

- Suitable for PVCu, Aluminium and Timber Windows for **flexible application**
- Delivers 2500 EA to comply with Approved Document F 2006
- Available with easy-to-use manual or cord operation to suit most preferences
- Fully controllable and draught-free to **keep homeowners happy**
- Easy installation to **save fitting time and avoid hassle**
- Ideal for new builds and retro-fitting
- Available in 4 single or dual standard colours – HIPCA white (RAL9910), anthracite grey (RAL7016), anodised silver and black (RAL9005)
- Produced under ISO 9001 Quality Systems for **improved customer satisfaction**
- Ventilation performance tested to BS EN 13141-1:2004
- Acoustic performance tested to BS EN 20140-10:1992, ISO 140-10:1991.
- Water tightness tested to 400pa

Internal Finish	HIPCA WHITE RAL9910	HIPCA WHITE RAL9910	HIPCA WHITE RAL9910	HIPCA WHITE RAL9910	ANTHRACITE GREY RAL7016	ANODISED SILVER	BLACK RAL9005
External Finish	ANTHRACITE GREY RAL7016	ANODISED SILVER	BLACK RAL9005	HIPCA WHITE RAL9910	ANTHRACITE GREY RAL7016	ANODISED SILVER	BLACK RAL9005
300	RWS325311	RWS325312	RWS325315	RWS325300	RWS325301	RWS325302	RWS325305
375	RWS325111	RWS325112	RWS325115	RWS325100	RWS325101	RWS325102	RWS325105
Box Qty.	100	100	100	100	100	100	100

2500EA / 5000EA Acoustic Window Ventilator

The best of both worlds... achieves Building Regulations' EA requirements along with fantastic acoustic performances up to 45dB(A)

2500EA (VEN72501 or VEN72502)

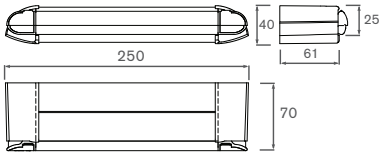

External

5000EA (VEN75001 or VEN75002)

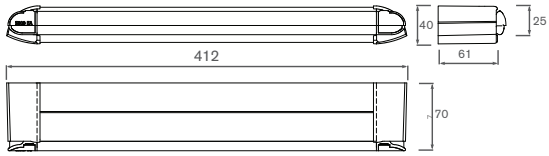

External

- Smallest acoustic window vents (on the market) providing 2500mm² or 5000mm² equivalent area ventilation
- Achieves the best acoustic performance for window ventilators available within the UK – up to 45dB(A)
- A simple, yet adaptable solution to meet required specification/ Building Regulation requirements, incorporating both high levels of equivalent area ventilation and acoustic noise reduction
- Modularity of acoustic sets provides flexibility for installation and acoustic performance
- Excellent airtightness performance with upward air deflection to reduce the risk of draughts
- May require add on section in some window installations

Sets comprise of:
1 EA vent + 1 external acoustic module – providing noise reduction with discreet internal aesthetics.
1 EA vent + 2 acoustic modules (for internal and external install) – providing maximum noise reduction.

AC1 installation (VEN72501 or VEN75001)

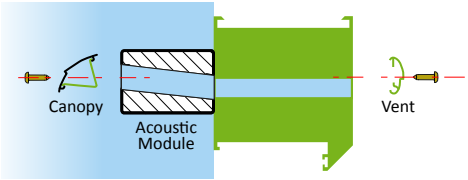

AC2 installation (VEN72502 or VEN75002)

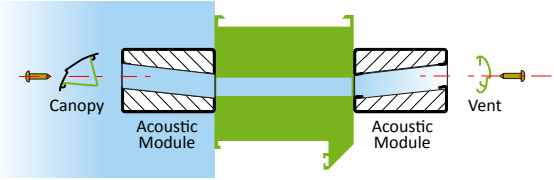

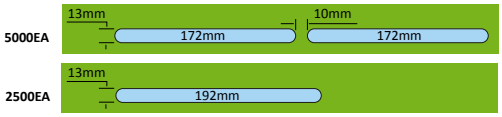

PLAIN COLOURS									
Internal Finish	WHITE	Acoustic performance			Air Flow (mm²)		vent	Slot size (Length-gap-length x height) (mm)	
External Finish	WHITE	Dn,e,w (dB)(A)	Dn,e,w (C)	Dn,e,w (Ctr)	Internal	External	Size (mm)	Internal	External
2500EAW.AC1	VEN72501	42	41	40	2670	2670	250 x 40	192 x 13	192 x 13
2500EAW.AC2	VEN72502	45	43	42	2670	2670	250 x 40	192 x 13	192 x 13
5000EAW.AC1	VEN75001	39	38	37	5350	5350	412 x 40	172-10-172 x 13	172-10-172 x 13
5000EAW.AC2	VEN75002	42	40	38	5350	5350	412 x 40	172-10-172 x 13	172-10-172 x 13
Box Qty.	100								

5000EA Slotvent

- Smallest 5000mm² equivalent air vent on market at just 410mm long
- 13mm rout for installation on window profiles
- Ideal for use where a high level of equivalent area is required and to achieve minimum room requirements under building regulations
- Manufactured from aluminium alloy
- Front opening
- 2 year guarantee

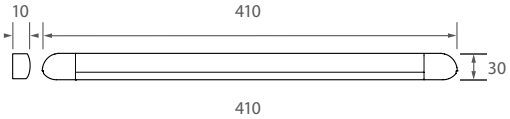

VENT	AIR FLOW (mm²)		SLOT SIZE (LENGTH-GAP-LENGTH) (mm)	
SIZE (mm)	INTERNAL	EXTERNAL	INTERNAL	EXTERNAL
410	5000	5000	165-10-165	165-10-165

PLAIN COLOURS	
Internal Finish	WHITE
External Finish	WHITE
410	VEN60001
Box Qty.	100

Acoustic Framevents

- A range of ventilators to assist clients in creating a satisfactory solution for all their acoustic related requirements
- Supplied with a PVCu internal flap unit and aluminium external canopy
- 4080mm² measured area 2500mm² equivalent area
- Achieves sound reduction of 40dB closed and 33dB open
- All ventilators in the range meet the requirements of Document F and Document E of the Building Regulations
- Sound reduction of up to 41dB (on certain models)
- All models have been independently tested in accordance with BS EN ISO717-1:1997 (airborne sound insulation & BS EN 20140-10:1992)
- All models have a minimum equivalent area of 2500mm²
- Meets World Health Organisation recommended reduction of 33dB

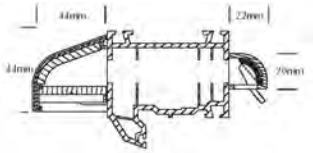

VENT	AIR FLOW (mm²)		SLOT SIZE (LENGTH-GAP-LENGTH) (mm)	
SIZE (mm)	INTERNAL	EXTERNAL	INTERNAL	EXTERNAL
431	4080	4080	340	340

PLAIN COLOURS		
Internal Finish	WHITE	BROWN
External Finish	WHITE	BROWN
431	RWS600000	RWS600009
Box Qty.	1	1

DUCO Ventilation & Sun Control

Grille Solid F30Z Glazed-in Window Louvre

Q Quality BS EN ISO 9001

10 Year Finish Guarantee

Vandal-proof

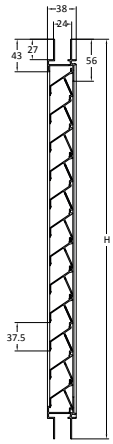

Solid F30/24Z

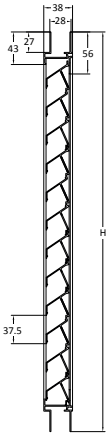

Solid F30/28Z

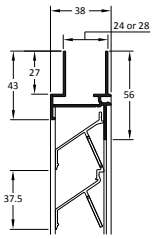

These high-quality aluminium window louvres are custom-made to your exact specifications to fit aluminium, timber & PVCu window frames of any size or finish. DucoGrilles provide intensive ventilation ideally suited to all kinds of industrial and commercial buildings. They let in plenty of fresh air to create a healthy, comfortable environment without compromising security. The unique stackable 'Z' shaped blades in the DucoGrille Solid deliver excellent burglar-resistant, weather-proof strength and durability.

- Available in 24mm or 28mm glazing thickness
- P1 Integrated fly screen as standard. P2 Stainless steel bird mesh or NP non-punched mesh (100% screening louvre) also available
- P2 Bird blade with additional 6mm galvanised mesh meets current gas regulations
- Free area: 34% (with fly screen) or 48% (with bird mesh)
- Blades and frame manufactured from extruded aluminium for strength and precision
- Unique clip-free design ensures blades are held fast by the outer frame and won't rattle in exposed areas or extreme conditions
- Independently tested by the BSRIA for water tightness
- Certified for burglar resistance to European Classification Class2
- Quality manufactured to BS EN ISO 9001
- RAL polyester powder coated 60-80 microns with a 10-year finish guarantee
- Recessed (with or without flange) and surface mounted wall louvres also available

Louvre Type			Grille Size		Mounting
G		Recessed wall louvre with flange		Dimension of louvre without flange (installation dimension) Width - 10mm x Height - 10mm of the wall opening	Fixing dowels included as standard. Allow 5mm clearance (all round) between opening in wall and frame for fixing.
N		Recessed wall louvre without flange		Dimension of louvre (installation dimension) Width - 10mm x Height - 10mm of the wall opening	Fixing dowels included as standard. Allow 5mm clearance (all round) between opening in wall and frame for fixing.
F		Window louvre		Total Width x total Height of the louvre grille (overall dimension)	Recessed mounting in window section
M		surface-mounted wall louvre		Total Width x total Height of the louvre grille (overall dimension)	Screws and plugs included as standard

VENTILATION VALUES		**P1**	**P2**	**NP**
Visual free passage		60%	86%	0
Physical free passage		34%	48%	0
Ce (higher is better)		0.24	0.28	n/a
Cd (higher is better)		0.23	0.28	n/a
K-FACTOR (lower is better)	INLET	17.70	12.85	n/a
	OUTLET	19.13	12.90	n/a
		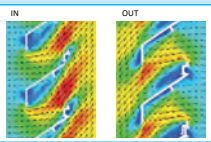	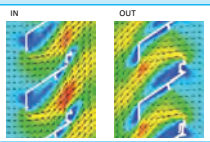	
WATER RESISTANCE				
Air velocity	0 m/s	C (91.1%)	B (96.1%)	n/a
Class A = 100-99%	0.5 m/s	C (83.5%)	B (95.9%)	n/a
Class B = 98.5-95%	1 m/s	D (77.7%)	C (93.5%)	n/a
Class C = 94.9-80%	1.5 m/s	D	C (87.6%)	n/a
Class D = <80%	2 m/s	D	D (67.3%)	n/a
	2.5 m/s	D	D	n/a
SECURITY				
Vandal-proof grille		✓	✓	✓
INSECT SCREEN	**RESISTANCE TO**	**SMALL SLOTS**	**LARGE SLOTS**	**FALSE LOUVRES**
2.3 x 2.3mm		Perforated louvre blades as insect screen	(OPTIONAL) Stainless-steel mesh 2.3 x 2.3 mm	100% Screening Louvre
6 x 6mm			(OPTIONAL) Stainless-steel mesh 6 x 6 mm	n/a
20 x 20mm			(STANDARD) Stainless-steel mesh 20 x 20 mm	n/a
FRAME TYPES AND DIMENSIONS				
Louvre pitch		37.5mm	37.5mm	37.5mm
G	Recessed wall louvre with flange: Recess depth	34.4mm	34.4mm	34.4mm
	Recessed wall louvre with flange: Frame rebate	18.2mm	18.2mm	18.2mm
N	Recessed wall louvre witout flange: Recess depth	34.4mm	34.4mm	34.4mm
	Recessed wall louvre witout flange: Frame rebate	18.2mm	18.2mm	18.2mm
F	Window louvre: Frame depth	38mm	38mm	38mm
	Window louvre: Flange width	24 or 28mm	24 or 28mm	24 or 28mm
M	surface-mounted wall louvre: Recess depth	43mm	43mm	43mm
Minimum dimensions W x H		200 x 200mm	200 x 200mm	200 x 200mm

Vent-A-Matic Rotary In-glass Fitting Window Ventilator - model 106 DGS

The RW Simon Vent-A-Matic controllable rotary vent is designed to be fitted by the fabricator directly into the glass of double glazed units to provide continuous ventilation to kitchens, bathrooms bedrooms and more.

- Designed to deliver continuous ventilation and conform with Gas Board recommendations
- Cord controlled non-electric fan
- Fits sealed double glazed units 12-32mm thick
- Designed for use on hermetically sealed units so MUST be fitted by the glazing manufacturer unless it's a replacement unit
- Integrated storm guard to help reduce drafts
- Fits a 162mm diameter sized hole
- Achieves airflow performance 6,997mm² EA
- Manufactured from UV stabilised translucent polystyrene to resist yellowing
- Quickly and easily fitted in just two parts into the glass aperture
- For extra weather tightness and security, apply some clear sealant to the external glazing ring
- Produced under ISO 9001 quality systems

VENT TYPE	106 DGS
Dim A	23mm
Dim B	159mm dia
Dim C	18mm
Dim D	65mm
Dim E	179mm dia
Dim F	203mm dia
Dim H	50mm
Hole Dim	162mm dia
Air Flow	9896 mm² EA

PART CODE	VMT106VENT
BOX QTY.	4

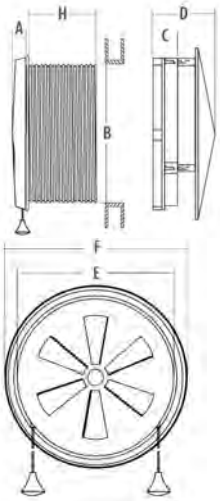

Vent-A-Matic Rotary In-glass Window Ventilator - model 106 for single glazed units

Looking for a durable, controllable clear vent to install into the pane of a single glazed window? The RW Simon Vent-A-Matic 106 fits the bill perfectly. Made from tough UV resistance polystyrene, this window vent won't discolour in sunlight to provide a continuous airflow without encroaching on your view.

- Cord controlled non-electric fan
- Fits single glazed units 4-6mm thick
- Delivers constant airflow in line with Gas Board recommendations
- Achieves airflow performance 5897mm² EA
- Suits a 162mm diameter hole
- Manufactured from UV stabilised translucent polystyrene to resist discolouration
- Quickly and easily fitted in two parts into the glass aperture
- An SG6 storm guard is recommended with this model particularly in exposed locations or harsh conditions
- Produced under ISO 9001 quality systems

VENT TYPE	106
Dim A	23mm
Dim B	159mm dia
Dim C	18mm
Dim D	65mm
Dim E	179mm dia
Dim F	203mm dia
Hole Dim	162mm dia
Air Flow	7796 mm² EA

PART CODE	VMT30507
BOX QTY.	20

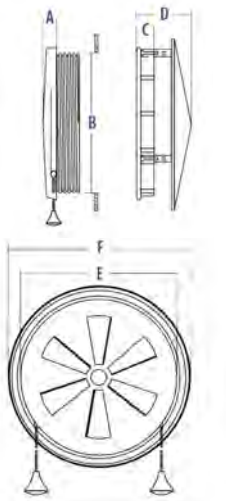

Vent-A-Matic Static In-glass Fitting Window Ventilator - model DGS/JG

This RW Simon clear and robust Vent-A-Matic static in-glass ventilator fits into double glazed units to provide a discrete and effective way of ensuring a steady and persistent flow of fresh air to any room.

- Provides continuous ventilation and conforms with Gas Board recommendations
- Fits double glazing units 12-32mm thick
- Designed for hermetically sealed units so MUST be fitted by the glazing manufacturer unless this is intended as a replacement unit
- Square louvred internal plate
- Comes with integrated storm guard to reduce drafts even in exposed settings
- Fits a 162mm diameter sized hole
- Achieves airflow performance 7796mm² EA
- Ensure extra weather sealing and security by applying a little clear sealant to the external glazing ring
- Quickly and easily fitted in two parts into the glass aperture
- Manufactured from UV stabilised translucent polystyrene to resist yellowing
- Produced under ISO 9001 quality systems

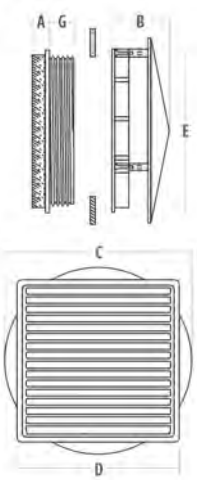

VENT TYPE	DGS /JG
Dim A	18.5mm
Dim B	65mm
Dim C	203mm dia
Dim D	172mm
Dim E	172mm dia
Dim G	28mm
Hole Dim	162mm dia
Air Flow	7796 mm² EA

PART CODE	VMT30528
BOX QTY.	4

Vent-A-Matic Static In-glass Fitting Window Ventilator - model DGS/PBS

This RW Simon Vent-A-Matic static ventilator meets Gas Board recommendations to provide a continuous ventilation solution for rooms with open fires, word burners, boilers and central heating where an ample supply of fresh air is essential to fuel the combustion process efficiently and eliminate the build-up of harmful gases.

- Achieves continuous ventilation in line with Gas Board guidelines BS 5440-2:2000
- Circular outer louvre design
- Fits double glazed units 12-32mm thick
- Designed for use on hermetically sealed units so MUST be fitted by the glazing manufacturer unless it's been bought as a replacement unit
- Comes with integral storm guard as standard to reduce drafts
- Fits a 159mm diameter sized hole
- Achieves airflow performance 9,896mm² EA
- Just two parts to assemble for a fast, simple fit into the glass hole
- Manufactured from UV stabilised translucent polysterene to resist yellowing
- The unit is secured with a central brass bolt on the inside which can't be removed from the outside
- Produced under ISO 9001 quality systems

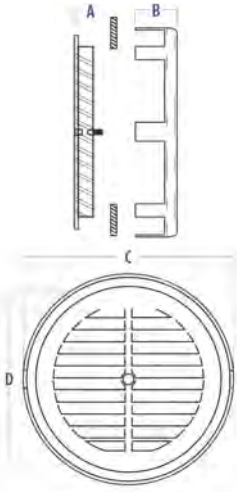

VENT TYPE	DGS/PBS
Dim A	5.5mm
Dim B	36mm
Dim C	200mm dia
Dim D	215mm dia
Hole Dim	159mm dia
Air Flow	9896 mm² EA

PART CODE	VMT30540
BOX QTY.	1

Airstrip 19000 'Glazed-in' Ventilator

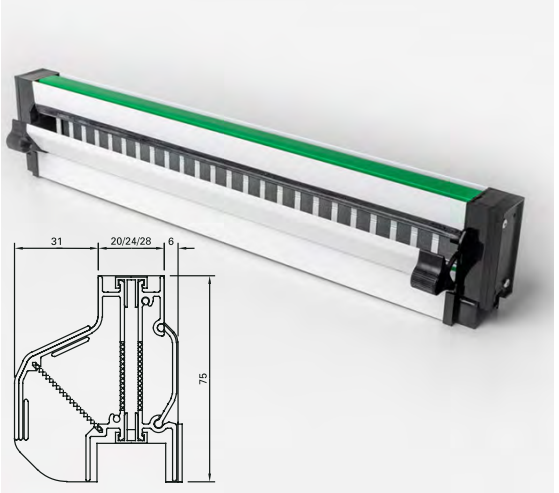

RW Simon leads the way with this top-performing Airstrip 19000 ventilator, which offers built-in updraught facility and variable operating modes that deliver increased airflow capable of meeting Document F 2010 of building regulations. The Airstrip 19000 is installed between the head of the window profile and held in place by the glazing system. This product is also available as a gas vent, delivering a continuous supply of fresh air in line with Gas Board recommendations. Every ventilator is made to measure to suit your specific application. Please use our custom order form to ensure we have all the relevant information needed to provide you with an accurate quote.

Highlights:
- External hood as standard
- Thermally broken / thermally insulated
- Fitted with storm seal in internal flap. Storm locks available if required
- Flap control offers two opening positions between fully open and fully shut
- Permanent trickle (gas), knob, rod and cord operation available
- Suitable for double glazing thicknesses 20, 24, 28 and 32mm
- Glass height reduction 64mm
- Four standard colour options: Black (RAL9005 matt), White (RAL9910 Hicpa satin), Dark Brown Mahogany (RAL8019 matt) & Grey (RAL7016 matt)
- Special colours and dual colours also available

Performance:
- Tested to BS EN 13141-1:2004 achieves 12,931mm^2 equivalent area
- 5000mm^2 EA achieved on a length of just 386mm
- 2500mm^2 EA achieved on a length of just 193mm
- BS 5440-2:2000 compliant
- Water tightness limit of 600pa
- Acoustically tested to BS EN 20140-10:1992, ISO 140-10:1991

Components:
Two aluminium bodies assembled with thermal break, flap with knob controls at both ends (cord/rod control as optional), pair of end caps, 4 x screws, standard fly screen or gas fly screen, glass and ventilator gasket.

Airstrip 400 'Glazed-in' Ventilator

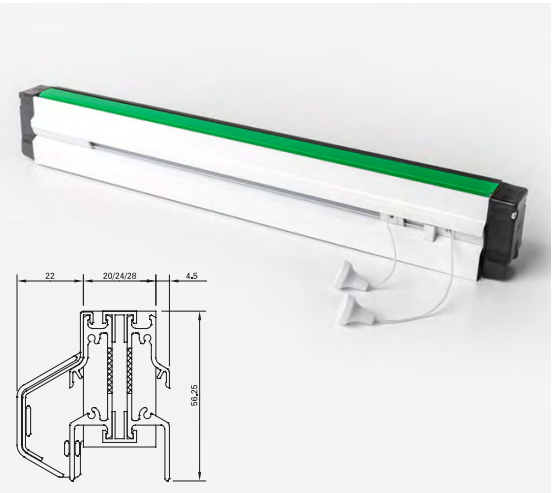

Not only is the Airstrip 400 easy to assemble and simple to install, it's also versatile and achieves superior thermal performance. That's all down to its unique twin shutter system, external hood and thermally broken all-aluminium design, which lets fabricators mix and match the internal/external faces to achieve the exactly the look they're after. The Airstrip 400 is installed between the head of the window profile and held in position by the glazing unit. Every ventilator is custom made to suit your requirements. Please use our special order form to ensure we have all the relevant information needed to provide you with an accurate quote.

Highlights:
- Includes external hood
- Thermally broken / thermally insulated design
- Optional internal updraught deflector
- Twin open and close shutters
- Knob and cord operation available
- Trickle ventilation as standard
- Suitable for double glazing thicknesses 20, 24 and 28mm
- Glass height reduction 45mm
- Four standard colour options: Black (RAL9005 matt), White (RAL9910 Hicpa satin), Dark Brown Mahogany (RAL8019 matt) & Grey (RAL7016 matt)
- Special RAL colours and dual colours also available

Performance:
- Tested to BS EN 13141-1:2004 achieves 4,103mm^2 equivalent area
- 5000mm^2 EA achieved on a length of 1,218mm
- 2500mm^2 EA achieved on a length of 609mm
- BS 5440-2:2000 compliant
- Water tightness limit of 400pa
- Acoustically tested to BS EN 20140-10:1992, ISO 140-10:1991
- Weather performance tested to BS EN 1026:2016 & BS EN 1027:2016

Components:
Supplied assembled. Aluminium body with thermal break and 2 PVCu shutter strips. External hood and fixing screws. Optional internal updraught deflector and fixing screws. Knob or cord control mechanism. Pair of 16mm, 20mm or 24mm end caps. Trickle ventilation baffle plate. 4 x screws. Fly screen and glazing gasket.

To order either the Airstrip 400 or 19000, please contact our sales team on 01234 242724

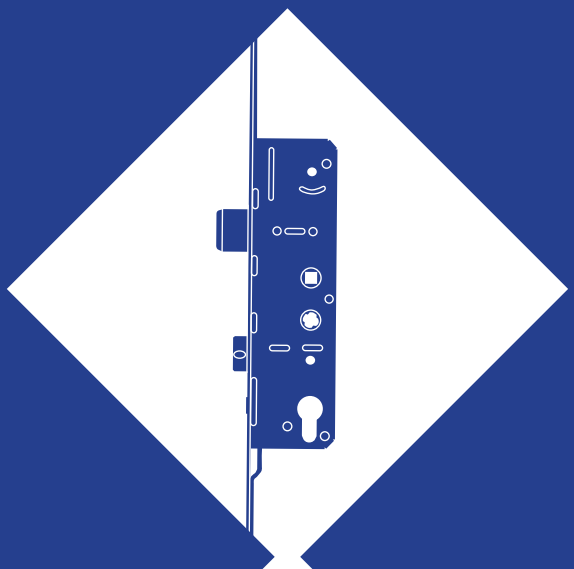

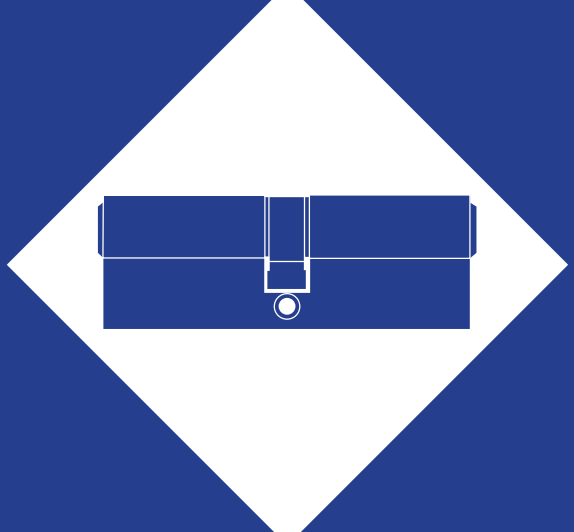

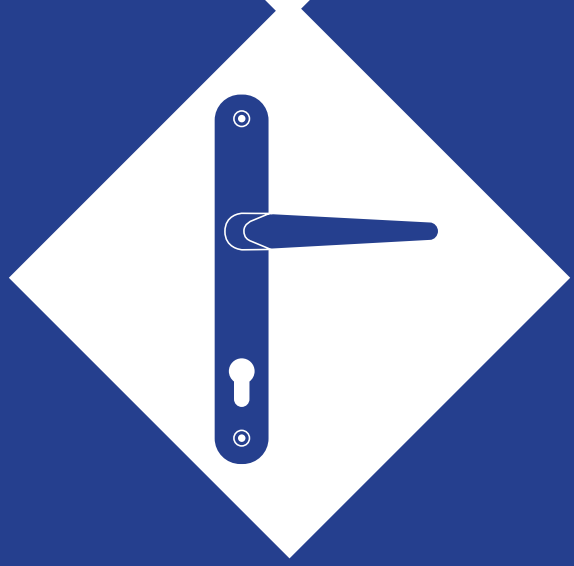

Multipoint Door Locks	**108-203**
Yale Lockmaster 21	108, 110 & 112-115
Yale Lockmaster	108, 110, 117-128, 154, 156 & 162-177
Yale	108, 110, 146, 148-151, 154, 156 & 159-161
MACO	108, 111, 133-137, 144 & 158
Avantis	109, 111 & 129-132
Fullex	109, 155-156 & 200-203
GU	109, 111, 138-140, 145, 155 & 179-191
KFV	111 & 142-143
Winkhaus	109, 154 & 192-198
Millenco	155 & 199
ERA	158
Keeps	**See Lock pages**
Finger Operated Shootbolts	**116**
Electric Striker Set Up	**140-141**
Digital Keypad Set Up	**142-143**
Stable Door Locks	**144-145**
Siliding Patio Door Locks	**146-147**
Bi-fold Door Locks	**148-151**
Bi-fold Hardware	**152-153**
Replacement Lockcases	**156-158**
Shootbolt Keeps	**178**
Smart Home	**204-209**
Kubu	205
Yale	206-208
MACO	209
Panic Bars	**210-213**
Profile Cylinders	**214-225**
Cylinder Pulls & Escutcheons	**226-227**
Pull Handles	**228-233**
Handles	**147 & 234-251**
Handle Accessories	**251-252**
Hinges	**253-262**
Letterplates	**263-267**
Knockers & Spyholes	**268-269**
Numbers & Letters	**270**
Door Chains	**270**
Restrictors	**271**
Door Closers	**272**
Low Threshold	**274-278**
Pet Doors	**279-283**

Yale

LOCKMASTER®

10 YEAR GUARANTEE MECHANICAL

- Britain's best selling multipoint locking system
- Wide range of variants suitable for PVCu, aluminium and composite doors
- Available with 92mm single spindle or 92/62mm dual split spindle follower
- 35 & 45mm backsets
- 10 year guarantee

We offer more lockmaster variants than any other distributor, see pages 110, 117-128, 154, 156 & 162-177

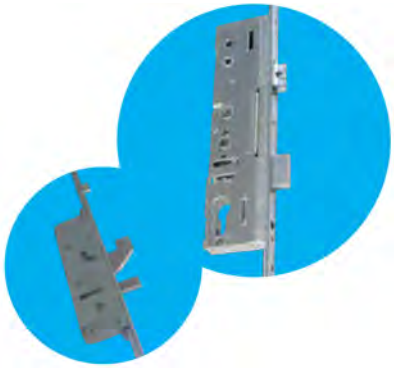

Yale

LOCKMASTER 21

10 YEAR GUARANTEE MECHANICAL

BBA Approved

The Yale Lockmaster 21 is the newest iteration of Britain's best-selling multipoint door lock, so called because it comes 21 years after the very first Lockmaster was released. This latest offering delivers the same reliability, ease of use and long service life you've come to expect from Lockmaster, coupled with the usual high levels of security and superior performance, but with some great new features added in:

- Lockmaster's renowned hook and pin unit and precompression rollers are cleverly positioned within 100mm of each other
- Coming soon – The push-in latch snib feature has been specifically designed to prevent accidental lock-outs
- Lockmaster 21 now comes with a secure centre hook as standard
- New hardened screw-in plastic tidy boxes last longer and give a neat, streamlined finish.
- There's a new selection of profile-related packers to choose from.
- A new 13mm axis one-piece keep can withstand greater loads during security testing to create the strongest Lockmaster yet!

Find new Lockmaster 21 products featured on pages 110 & 112-115

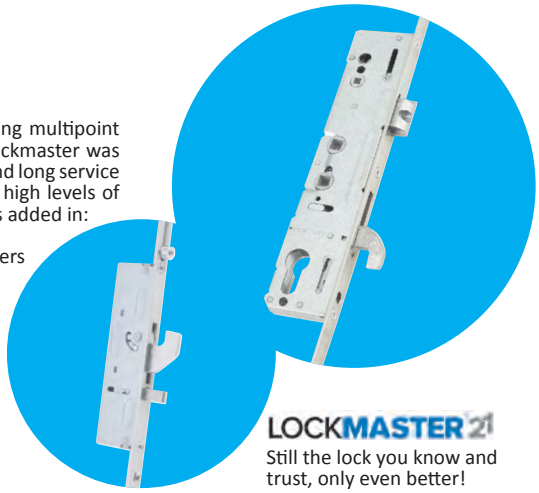

LOCKMASTER 21

Still the lock you know and trust, only even better!

Yale

10 YEAR GUARANTEE MECHANICAL

BBA Approved

- YS170 multipoint locking system
- Available for PVCu and composite doors
- DDL ready -- will fit with the Yale Keyfree door lock
- 92mm true split spindle follower
- 35mm & 45mm backsets
- 10 year guarantee

For a full list of variants see pages 110, 146, 148-151, 154, 156 & 159-161

---

maco

10 year warranty

- Available in 2 hook, 2 hook / 2 roller cams
- 92mm centres, 35mm backsets
- C-TS range
- 10 year guarantee

For a full list of variants see pages 111, 133-137, 144 & 154

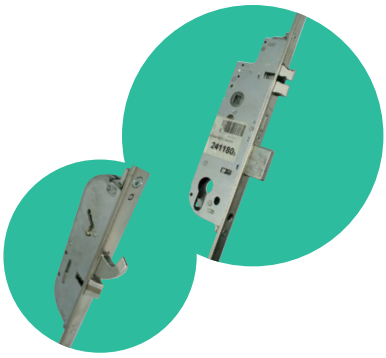

PAS 24 PASSED

Avantis 10-year mechanical

SBD Approved

Avantis More than manufacturing

- 16 & 20mm faceplate, 35, 45mm back set
- PZ92/62mm dual follower centre case
- Class-leading compression: 25mm direct drive centre bolt & optional roller cams
- Accredited protection: large, strong security hooks and unique cylinder guard
- Profile-specific fully adjustable one-piece shootbolt keeps
- Suitable for PVCu & Composte doors
- Kubu ready locks also available please call our sales office or visit or website for details

Guarantees and certifications:
- Tested to PAS 24 & BS 6375
- Secured by Design accredited
- Corrosion-resistant to EN 1670: grade 4
- Tested over 50,000 cycles with a 10-year mechanical guarantee

For a full list of variants see pages 111 & 129-132

fullex locks limited

- Available in 68mm PZ or 92/62mm split spindle
- 35, 45 & 55mm backset - depending on range
- 3 dead bolt and 3 dead bolt + hook versions
- 10 year guarantee

For a full list of variants see pages 111, 155-156 & 200-203

BBA Approved

GU FERCO

- Wide range of variants including the:
  - GU Europa range
  - Ferco 5.28 & 6.35 70mm centre latch and 4 roller locks
  - Tripact Timber lock
- 35, 40, 45 & 50mm backsets
- 70 & 92mm centres
- True split spindle followers
- 10 year guarantee

For a full list of variants see pages 111, 138-140, 145, 155 & 179-191

10 YEAR WARRANTY

WINK HAUS

- Wide range of variants including the:
  - Cobra, 2 hook
  - SLK Scorpion, 3 hook, 2 roller
  - AV2 Auto Slam Lock, 2 hook
- 92mm centres
- True split spindle followers
- 10 year guarantee

For a full list of variants see pages 154, & 192-198

Yale® LOCKMASTER 21 LOCKMASTER®

PART CODES	CENTRE CASE								LOCKING POINTS					FACEPLATE					PRO-FILE			MULTIPOINT LOCKS						PAGE
	LATCH ONLY	LATCH & DEADBOLT	LATCH & HOOKBOLT	CENTRES (mm)	BACKSET (mm)	SPINDLE	SPRUNG	UN-SPRUNG	ROLLER	HOOK	SECURITY LATCHES	ANTI-LIFT PINS	EXTENDABLE	LENGTH (mm)	WIDTH (mm)	ENDS: RADIUS	ENDS: SQUARE	ENDS: U-CHANNEL	PVCu	COMPOSITE	ALUMINIUM	LEVER OPERATED	KEY WIND UP	SLAM	CONTEMPORARY	HERITAGE	NIGHT LATCH	
Lockmaster21																												
YLM13120M			•	92	35	Single	•		4	2		2		2200	16		•		•			•			•			112
YLM13121M			•	92/62	35	Split (True)			4	2		2		2200	16		•		•			•			•			112
YLM14300M			•	92	35	Single	•		4	2		2	•	2200	16		•		•			•			•			113
YLM14301M			•	92/62	35	Twin		•	4	2		2	•	2200	16		•		•			•			•		•	113
YLM17200M			•	92	35	Single	•		4	2		2	•	2117	16		•		•			•			•			114
YLM17201M			•	92/62	35	Twin		•	4	2		2	•	2117	16		•		•			•			•		•	114
YLM45100M			•	92	35	Single	•		2	2		2	•	2200	16		•		•			•			•			115
YLM45101M			•	92/62	35	Twin		•	2	2		2	•	2200	16		•		•			•			•		•	115
Lockmaster																												
PAD18131SS		•		92/62	45	Split		•		2				2200	16		•		•			•			•		•	117
PAD18120RE		•		92	45	Single	•			2				1770	20	•			•			•			•			118
PAD18121RE		•		92/62	45	Twin		•		2				1770	20	•			•			•			•		•	118
PAD18121SS		•		92/62	45	Twin		•		2				1770	20		•			•		•			•		•	119
PAD85000		•		92	45	Twin		•						2040	44		•			•		•			•		•	120
PAD85002		•		92	45	Twin		•						2040	44		•			•		•			•		•	120
YAL20005		•		92	45	Single	•			2		2		2200	16		•			•			•		•			121
YAL20005T		•		92	45	Single	•			2		2		2200	16		•			•			•			•		122
YAL20004		•		92	45	Single	•			2		2		1770	20	•				•			•		•			123
YAL20004T		•		92	45	Single	•			2		2		1770	20	•				•			•			•		124
YAE14501		•		92	45	Single	•				2			1770	16		•			•				•	•			125
YAE14503		•		92	45	Single	•				3			1770	16		•			•				•		•		126
YAE14502		•		92	45	Single	•				2			1770	20	•				•				•	•			127
YAE14504		•		92	45	Single	•				3			1770	20	•				•				•		•		128
Lockmaster Sliding Patio Locks																												
WPL10001	•			92	20	Single	•			4			•	1414	16			•	•		•	•						146
WPL10002	•			92	20	Single	•			6			•	1414	16			•	•		•	•						146
Yale Bi-fold Multipoint Door Locks																												
YBF00428		•		92	28	Single	•		2	2		2		2200	24			•			•				•			148
YBF00528		•		92	28	Twin		•	2	2		2		2200	24			•			•				•		•	149
YBF00128		•		92	28	Single	•		2	2		2		2200	16		•				•				•			150
YBF00328	•			92	28	Single	•							2200	16		•				•				•			150
YBF00628		•		92	28	Single			2	2				2200	16		•				•				•			151

Please note we stock a wide range of multipoint door locks by

Yale® LOCKMASTER® WINKHAUS G-U FERCO Milkwa fullex please see pages 154-155 & 149-203

We also stock replacement lockcases by

Yale® LOCKMASTER® fullex mach FUHR ERA PRODUCTS The Door Lock People please see pages 156-158

PART CODES	CENTRE CASE: LATCH & DEADBOLT	SLAVE	CENTRES (mm)	BACKSET (mm)	SPINDLE	SPRUNG	UN-SPRUNG	LOCKING POINTS: ROLLER	I.S.CAM	HOOK	EXTENDABLE	FACEPLATE: LENGTH (mm)	WIDTH (mm)	ENDS: RADIUS	SQUARE	PROFILE: PVCu	COMPOSITE	ALUMINIUM	MULTIPOINT LOCKS: LEVER OPERATED	KEY WIND UP	SLAM	CONTEMPORARY	HERITAGE	STABLE DOOR	NIGHT LATCH	PAGE
MAC242411	•		92	35	Single	•		2		2	•	1800	16		•	•			•			•				133
MAC242371	•		92	35	Split (True)	•		2		2	•	2200	16		•	•			•			•			•	134
MAC24351		•	92	35	Single							1500	16		•	•			•			•				135
MAC243653		•	92	45	Single							1500	16		•	•			•			•				135
MAC241672	•		92	45	Single	•				2		1750	20	•			•				•	•				136
MAC244992	•		92	45	Single	•				2		1750	20	•			•				•		•			137
MSD104706	•		92	35	Single	•			2	2	•		16		•	•		•	•	•				•		144
MSD104711	•		92	35	Single	•			2	2	•		16		•	•		•	•	•				•		144

PART CODES	CENTRE CASE: LATCH & DEADBOLT	SLAVE	CENTRES (mm)	BACKSET (mm)	SPINDLE	SPRUNG	UN-SPRUNG	LOCKING POINTS: ROLLER	HOOK	SHOOTBOLT	EXTENDABLE	FACEPLATE: LENGTH (mm)	WIDTH (mm)	ENDS: RADIUS	SQUARE	PROFILE: PVCu	COMPOSITE	ALUMINIUM	MULTIPOINT LOCKS: LEVER OPERATED	KEY WIND UP	SLAM	CONTEMPORARY	HERITAGE	NIGHT LATCH	PAGE
AVT165001	•		92/62	35	Twin		•	2	2			2200	16		•	•			•			•		•	129
AVT165001S	•		92/62	35	Twin		•	2	2		•	2200	16		•	•			•			•		•	129
AVT175001	•		92/62	35	Twin		•		2			2200	16	•			•		•			•		•	130
AVT175011	•		92/62	45	Twin		•		2			2200	20	•			•		•			•		•	130
AVT155001S	•		92/62	35	Twin		•	2	2		•	2200	16		•	•			•			•		•	131
AVT100000		•	92/62	35	Single		•					2200	16		•	•			•			•			132

PART CODES	CENTRE CASE: LATCH & DEADBOLT	CENTRES (mm)	BACKSET (mm)	SPINDLE	SPRUNG	UN-SPRUNG	LOCKING POINTS: ROLLER	I.S.CAM	HOOK	DEADBOLT	ANTI-LIFT PINS	SHOOTBOLT	EXTENDABLE	FACEPLATE: LENGTH (mm)	WIDTH (mm)	ENDS: RADIUS	SQUARE	PROFILE: PVCu	COMPOSITE	ALUMINIUM	MULTIPOINT LOCKS: SLAM	CONTEMPORARY	HERITAGE	STABLE DOOR	NIGHT LATCH	PAGE
GSL36037	•	92	45	Single	•					2				1770	20	•			•		•	•				138
GSL37298	•	92	45	Single	•					3				1770	20	•			•		•		•			139
FER32487	•	92	28	Single	•				2				•	2285	16		•	•						•		145
FER32486	•	92	35	Single	•				2				•	2285	16		•	•						•		145

PART CODES	CENTRE CASE: LATCH & DEADBOLT	CENTRES (mm)	BACKSET (mm)	SPINDLE	SPRUNG	UN-SPRUNG	LOCKING POINTS: DEADBOLT	PIN BOLT	ANTI-LIFT PINS	SHOOTBOLT	EXTENDABLE	FACEPLATE: LENGTH (mm)	WIDTH (mm)	ENDS: RADIUS	SQUARE	PROFILE: PVCu	COMPOSITE	ALUMINIUM	MULTIPOINT LOCKS: KEY WIND UP	SLAM	CONTEMPORARY	STABLE DOOR	NIGHT LATCH	PAGE
WDL10035S	•	92	35	Wind Up	•			2				2170	16		•	•			•		•			143

Lockmaster 21
3 Hook, 4 Roller, 2 Anti-lift Pins

10 YEAR GUARANTEE MECHANICAL

New Door Lock

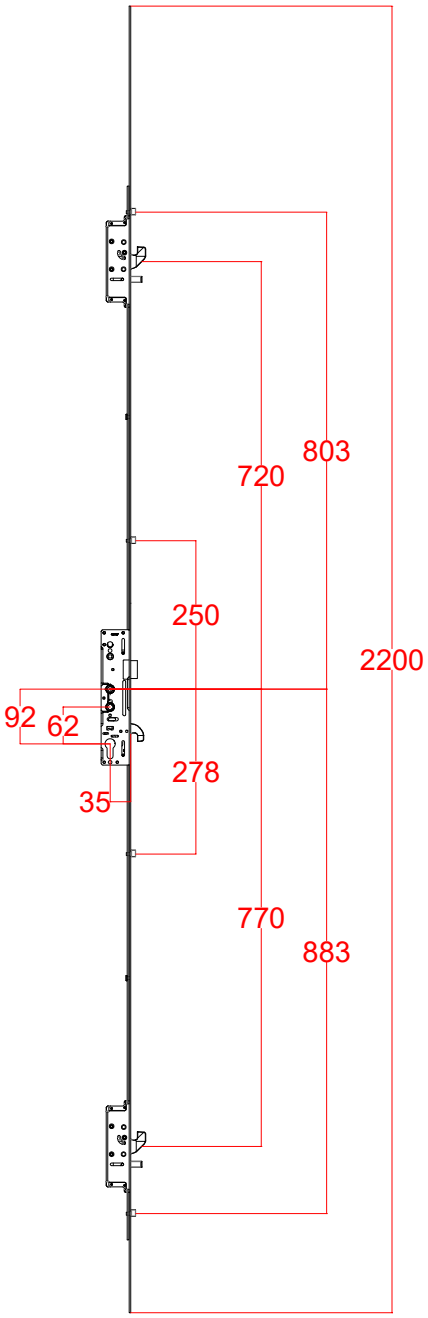

- 35mm backset as standard
- PZ92mm centre case
- Easily reversible latch
- Tested to PAS 24 & SBD accredited
- Sprung and un-sprung centre cases available
- Un-sprung lock case has twin followers to accommodate both front door night latch operation and back door lever/lever functionality
- Stainless steel pre-compression rollers pull the door in before locks are deployed to give smooth, effortless engagement and optimal weather-proofing.
- High-security hooks with 25mm engagement
- Corrosion resistant to BS EN 1670 Grade 4 240 hours salt spray
- Tested to minimum of 100, 000 cycles with a 10-year mechanical guarantee
- Single or multi-piece keeps and wide choice of packers available to suit most profiles

KEEPS TO SUIT
One Piece Keep

Left Hand	**Right Hand**
YLM91041M	YLM91042M

For the correct packers please contact our sales office on 01234 242724.

DESCRIPTION	CENTRE CASE	CENTRES	BACKSET	SPINDLE	ROLLER	HOOK & ANTI LIFT PINS	NO. OF KEEPS REQUIRED CENTRE	NO. OF KEEPS REQUIRED HOOK	PART CODE
Lockmaster 21	Latch & Hookbolt	92mm	35mm	Single	4	2	1 x One Piece Keep		YLM13120M
Lockmaster 21	Latch & Hookbolt	92/62mm	35mm	Twin	4	2	1 x One Piece Keep		YLM13121M

New Door Lock

10 YEAR GUARANTEE MECHANICAL

Lockmaster 21
3 Hook, 4 Roller,
2 Anti-lift Pins, Extendable

Yale LOCKMASTER 21

- 35mm backset as standard
- PZ92mm centre case
- Easily reversible latch
- Tested to PAS 24 & SBD accredited
- Sprung and un-sprung centre cases available
- Un-sprung lock case has twin followers to accommodate both front door night latch operation and back door lever/lever functionality
- Stainless steel pre-compression rollers pull the door in before locks are deployed to give smooth, effortless engagement and optimal weather-proofing.
- High-security hooks with 25mm engagement
- Corrosion resistant to BS EN 1670 Grade 4 240 hours salt spray
- Tested to minimum of 100, 000 cycles with a 10-year mechanical guarantee
- Single or multi-piece keeps and wide choice of packers available to suit most profiles

KEEPS TO SUIT
One Piece Keep

Left Hand	**Right Hand**
YLM91031M	YLM91032M

For the correct packers please contact our sales office on 01234 242724.

For shootbolts please see the table below

SHOOTBOLT TYPE	OVERALL SHOOTBOLT LENGTH TOP	OVERALL SHOOTBOLT LENGTH BOTTOM	SASH REBATE ON YLM14300M MIN	SASH REBATE ON YLM14300M MAX	PART CODE
Standard	200mm	200mm	1979mm	2452mm	PAD90011SS
Short High Security	150mm	132mm	1783mm	2334mm	PAD90088S

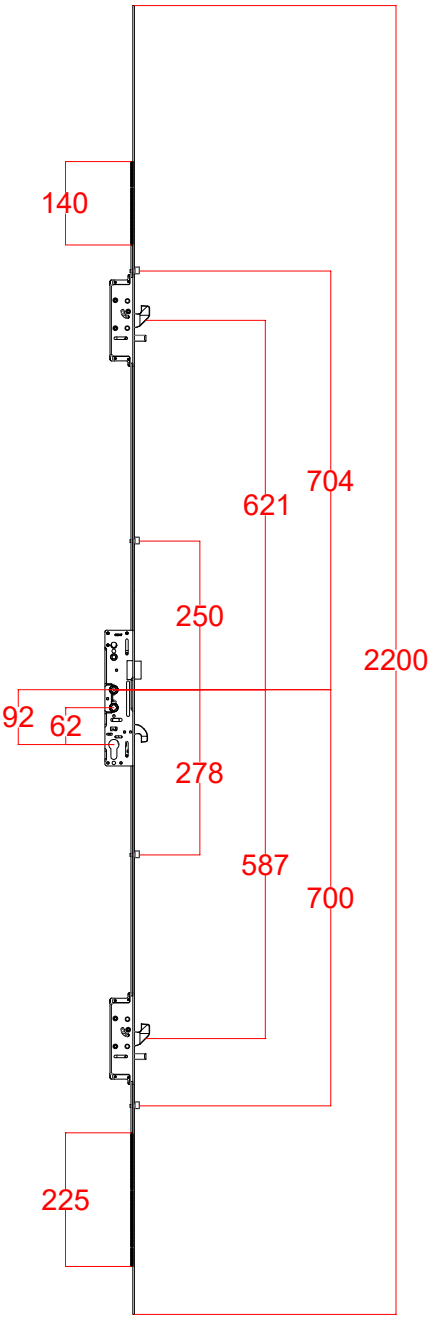

DESCRIPTION	CENTRE CASE	CENTRES	BACKSET	SPINDLE	ROLLER	HOOK & ANTI LIFT PINS	NO. OF KEEPS REQUIRED CENTRE	NO. OF KEEPS REQUIRED HOOK	PART CODE
Lockmaster 21, Extendable	Latch & Hookbolt	92mm	35mm	Single	4	2	1 x One Piece Keep		YLM14300M
Lockmaster 21, Extendable	Latch & Hookbolt	92/62mm	35mm	Twin	4	2	1 x One Piece Keep		YLM14301M

Lockmaster 21
3 Hook, 4 Roller,
2 Anti-lift Pins, Extendable

10 YEAR GUARANTEE MECHANICAL

New Door Lock

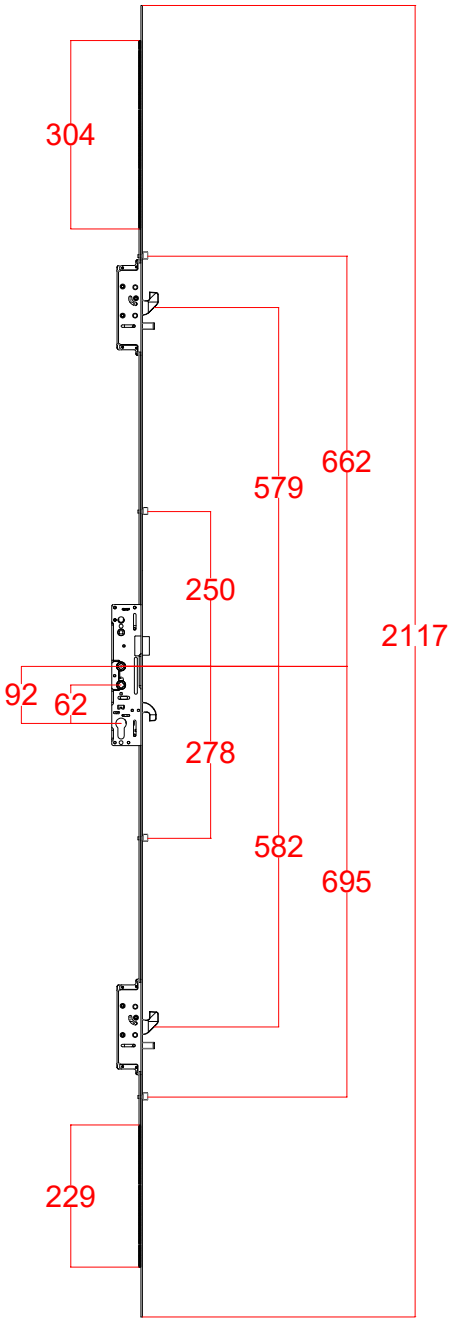

- 35mm backset as standard
- PZ92mm centre case
- Easily reversible latch
- Tested to PAS 24 & SBD accredited
- Sprung and un-sprung centre cases available
- Un-sprung lock case has twin followers to accommodate both front door night latch operation and back door lever/ lever functionality
- Stainless steel pre-compression rollers pull the door in before locks are deployed to give smooth, effortless engagement and optimal weather-proofing.
- High-security hooks with 25mm engagement
- Corrosion resistant to BS EN 1670 Grade 4 240 hours salt spray
- Tested to minimum of 100, 000 cycles with a 10-year mechanical guarantee
- Single or multi-piece keeps and wide choice of packers available to suit most profiles

KEEPS TO SUIT
One Piece Keep
Left Hand **Right Hand**
YLM91011M YLM91012M

For the correct packers please contact our sales office on 01234 242724.

For shootbolts please see the table below

SHOOTBOLT	OVERALL SHOOTBOLT LENGTH		SASH REBATE ON YLM17200M		PART CODE
TYPE	TOP	BOTTOM	MIN	MAX	
Standard	200mm	200mm	1979mm	2452mm	PAD90011SS
Short High Security	150mm	132mm	1783mm	2334mm	PAD90088S

DESCRIPTION	CENTRE CASE	CENTRES	BACKSET	SPINDLE	ROLLER	HOOK & ANTI LIFT PINS	NO. OF KEEPS REQUIRED		PART CODE
							CENTRE	HOOK	
Lockmaster 21, Extendable	Latch & Hookbolt	92mm	35mm	Single	4	2	1 x One Piece Keep		YLM17200M
Lockmaster 21, Extendable	Latch & Hookbolt	92/62mm	35mm	Twin	4	2	1 x One Piece Keep		YLM17201M

New Door Lock

10 YEAR GUARANTEE MECHANICAL

Lockmaster 21
3 Hook, 2 Roller,
2 Anti-lift Pins, Extendable

Yale LOCKMASTER 21

- 35mm backset as standard
- PZ92mm centre case
- Easily reversible latch
- Tested to PAS 24 & SBD accredited
- Sprung and un-sprung centre cases available
- Un-sprung lock case has twin followers to accommodate both front door night latch operation and back door lever/lever functionality
- Stainless steel pre-compression rollers pull the door in before locks are deployed to give smooth, effortless engagement and optimal weather-proofing.
- High-security hooks with 25mm engagement
- Corrosion resistant to BS EN 1670 Grade 4 240 hours salt spray
- Tested to minimum of 100, 000 cycles with a 10-year mechanical guarantee
- Single or multi-piece keeps and wide choice of packers available to suit most profiles

KEEPS TO SUIT
One Piece Keep
Left Hand **Right Hand**
YLM91021M YLM91022M

For the correct packers please contact our sales office on 01234 242724.

For shootbolts please see the table below

SHOOTBOLT TYPE	OVERALL SHOOTBOLT LENGTH TOP	OVERALL SHOOTBOLT LENGTH BOTTOM	SASH REBATE ON YLM45100M MIN	SASH REBATE ON YLM45100M MAX	PART CODE
Standard	200mm	200mm	1979mm	2452mm	PAD90011SS
Short High Security	150mm	132mm	1783mm	2334mm	PAD90088S

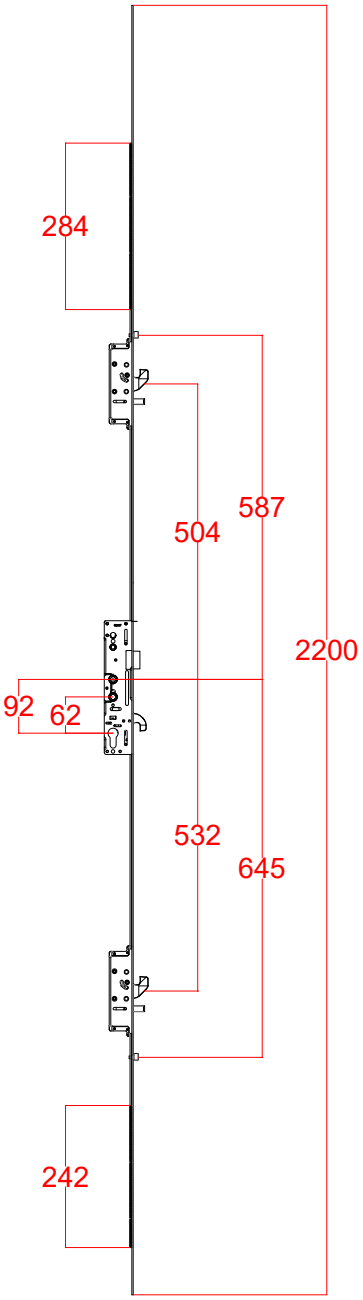

DESCRIPTION	CENTRE CASE	CENTRES	BACKSET	SPINDLE	ROLLER	HOOK & ANTI LIFT PINS	NO. OF KEEPS REQUIRED CENTRE	NO. OF KEEPS REQUIRED HOOK	PART CODE
Lockmaster 21, Extendable	Latch & Hookbolt	92mm	35mm	Single	2	2	1 x One Piece Keep		YLM45100M
Lockmaster 21, Extendable	Latch & Hookbolt	92/62mm	35mm	Twin	2	2	1 x One Piece Keep		YLM45101M

Finger Operated Shootbolt

PART CODE	TYPE	SIZE	BOX QTY.
Timber Fitting			
SBT55989	Universal but requires SBT55989, for Eurogroove Fitting see below	257mm	50
MAC42238	Eurogroove Packer for the above Fingerbolt	-	20

Finger Operated Shootbolt

FDB18766S FER16890S FER06432

PART CODE	TYPE	SIZE	BOX QTY.
PVCu Fitting			
FDB18766S	Finger Operated Shootbolt+Keep Flush Fitting	150mm	10
Timber Fitting			
FER16890S	Lever Operated Shootbolt Eurogroove Fitting	120mm	100
FER06432	Flush Bolt Eurogroove Fitting	200mm	100

Finger Operated Shootbolt

PART CODE	TYPE	SIZE	BOX QTY.
PVCu Fitting			
SBT044101	Eurogroove Fitting	85mm	50

Finger Operated Shootbolt

PART CODE	TYPE	SIZE	BOX QTY.
PVCu Fitting			
PAD90060SS	Flush Fitting	130mm	150

10 YEAR GUARANTEE MECHANICAL

SBD Approved

Lockmaster PL18 Lever Operated, 2 Hook with 16mm Square Faceplate

Yale LOCKMASTER®

- 92/62mm Centres
- Split Spindle door lock
- 16mm wide faceplate
- 2 Hook, Latch & deadbolt
- Designed to suit SLR10000 Lock RAIL
- Same routing prep as Yale Auto-Engage YAE14501 & Yale Keyturn YAL20005
- 10 Year manufacturer guarantee
- BBA Assessment report: S2/42984
- Salt spray tested to BS EN 1670 Grade 4 (240hrs)

KEEPS TO SUIT
Centre Latch & Hookbolt Keep

Left Hand	Right Hand	Non-Handed
PAD90162	PAD90163	PAD90164

For the correct packers please contact our sales office on 01234 242724.

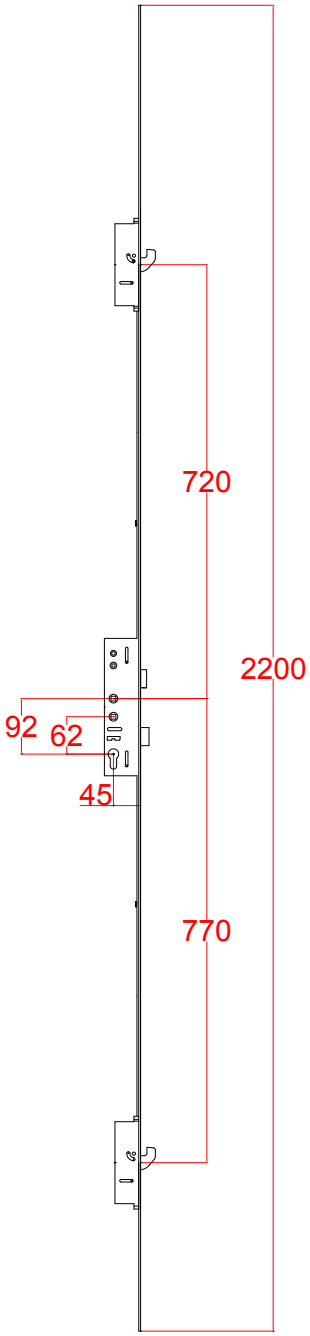

PAD90162

PAD90163

PAD90164

DESCRIPTION	CENTRE CASE	CENTRES	BACKSET	SPINDLE	HOOK	NO. OF KEEPS REQUIRED CENTRE	NO. OF KEEPS REQUIRED HOOK	PART CODE
Lockmaster Night Latch 16mm Square Faceplate	Latch & Deadbolt	92/62mm	45mm	Split	2	1	2	PAD18131SS

Yale LOCKMASTER®

Lockmaster PL18W Lever Operated, 2 Hook with 20mm Radius Faceplate

10 YEAR GUARANTEE MECHANICAL

BBA Approved

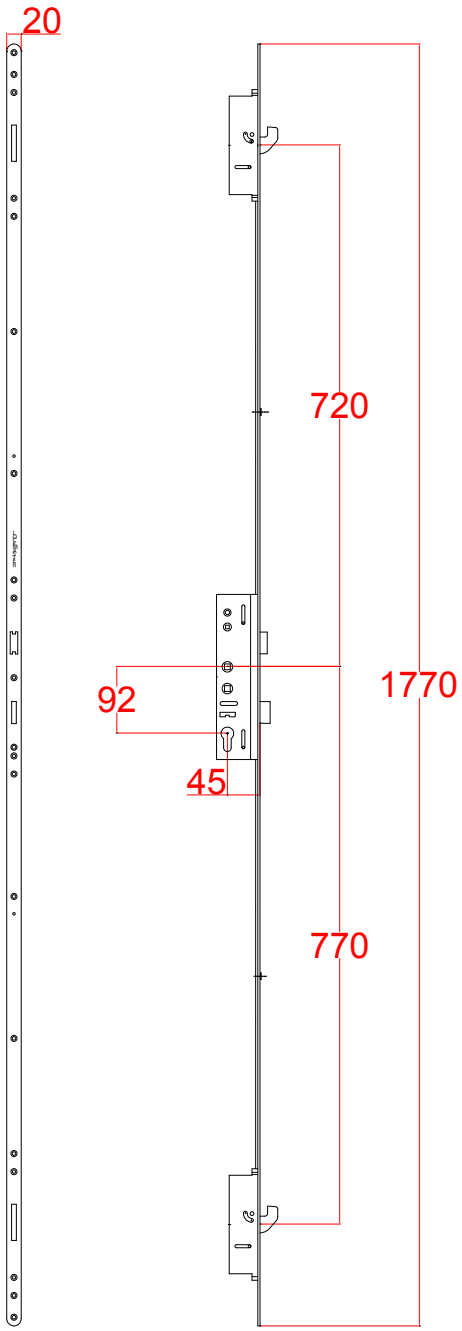

- 92mm centres
- 20mm facplate
- 35mm or 45mm backset
- Un-sprung lockcase has twin followers to give both front door night latch operation and standard back door
- lever/lever action
- Other features include: snib (latch hold-back) facility, easily reversible latch, deadbolts with hardened pins, hook bolts with 25mm throw and anti-lift pins
- BBA assessment report: S2/42984
- 10 year manufacturer guarantee
- Corrosion resistant salt spray: 240 hours
- BS EN 1670 grade 4

PAD90162

PAD90163

PAD90164

DESCRIPTION	CENTRE CASE	CENTRES	BACKSET	SPINDLE	HOOK	NO. OF KEEPS REQUIRED		PART CODE
						CENTRE	HOOK	
Lockmaster Night Latch Sprung 20mm Radius Faceplate	Latch & Deadbolt	92mm	45mm	Single	2	1	2	PAD18120RE
Lockmaster Night Latch Un-sprung 20mm Radius Faceplate	Latch & Deadbolt	92/62mm	45mm	Twin	2	1	2	PAD18121RE

10 YEAR GUARANTEE MECHANICAL

BBA Approved

Lockmaster PL18W Lever Operated, 2 Hook with 20mm Square Full Length Faceplate

Yale LOCKMASTER®

- 92mm centres
- 20mm facplate
- 45mm backset
- Un-sprung lockcase has twin followers to give both front door night latch operation and standard back door lever/ lever action
- Other features include: snib (latch hold-back) facility, easily reversible latch, deadbolts with hardened pins, hook bolts with 25mm throw and anti-lift pins
- BBA assessment report: S2/42984
- 10 year manufacturer guarantee
- Corrosion resistant salt spray: 240 hours
- BS EN 1670 grade 4

KEEPS TO SUIT
Centre Latch & Hook Keep Sets

Non-handed	Left Hand	Right Hand
PAD9017SS	PAD90165	PAD90166

For the correct packers please contact our sales office on 01234 242724.

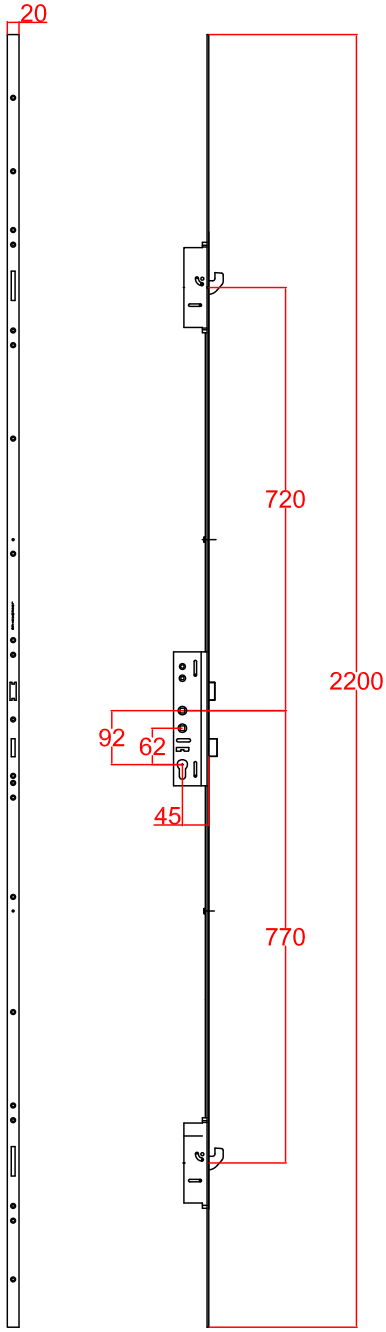

PAD90017SS PAD90165 PAD90166

DESCRIPTION	CENTRE CASE	CENTRES	BACKSET	SPINDLE	HOOK	NO. OF KEEPS REQUIRED		PART CODE
						CENTRE	HOOK	
Lockmaster Night Latch Un-sprung, 20mm Square Full Length Faceplate	Latch & Deadbolt	92/62mm	45mm	Twin	2	1	2	PAD18121SS

Lockmaster PL85 Lever Operated, 2 Hook with 44mm Aluminium Square Faceplate

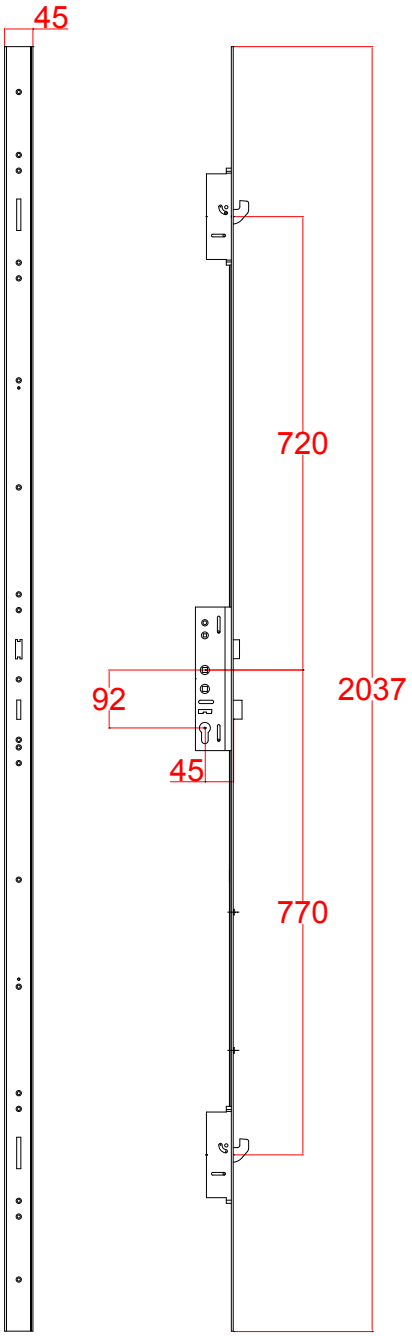

- 92mm centres
- Supplied with a 45mm backset
- Supplied with a 44mm wide colored faceplate to cover the complete lock strip for edge banded doors
- Un-sprung lockcase with dual followers
- Other features include: easily reversible latch, deadbolts with hardened pins and 2 hook bolts with 25mm throw and anti-lift pins
- BBA assessment report: S2/42984
- 10 year manufacturer guarantee
- Corrosion resistant salt spray: 240 hours,
- BS EN 1670 grade 4

KEEPS TO SUIT

Centre Latch & Deadbolt		Hook Keep
Left Hand	**Right Hand**	**Non-handed**
PAD90162	PAD90163	PAD90164

For the correct packers please contact our sales office on 01234 242724.

PAD90162 PAD90163 PAD90164

DESCRIPTION	CENTRE CASE	CENTRES	BACKSET	SPINDLE	HOOK & ANTI LIFT PINS	NO. OF KEEPS REQUIRED		PART CODE
						CENTRE	HOOK	
Lockmaster Night Latch Un-sprung 44mm White Faceplate	Latch & Deadbolt	92mm	45mm	Twin	2	1	2	PAD85000
Lockmaster Night Latch Un-sprung 44mm Brown Faceplate	Latch & Deadbolt	92mm	45mm	Twin	2	1	2	PAD85002

10 YEAR GUARANTEE MECHANICAL

SBD Approved

Lockmaster YLKT18-45 Key Wind Up KeyTurn Contemporary with 16mm Square Faceplate

Yale LOCKMASTER®

The Yale Contemporary Lock is a multipoint lock that provides a high performance locking mechanism without compromising the look of the door. It is designed to suit both contemporary or traditional applications.

- Operated by key wind mechanism
- Non handed
- Compatible with current Yale Lockmaster Keeps
- Works with standard euro profile cylinders
- Tested in excess of 200,000 cycles
- BS EN 1670 accredited, tested to 240 hours natural salt spray
- 12 month surface finish guarantee
- 10 year mechanical guarantee
- Meets the requirements of PAS 24
- Police accredited (Secured By Design)
- Designed and manufactured in the UK

KEEPS TO SUIT

Composite Door Centre Keep		**Hook Keep**
Left Hand	**Right Hand**	**Non-Handed**
PAD90162	PAD90163	PAD90164

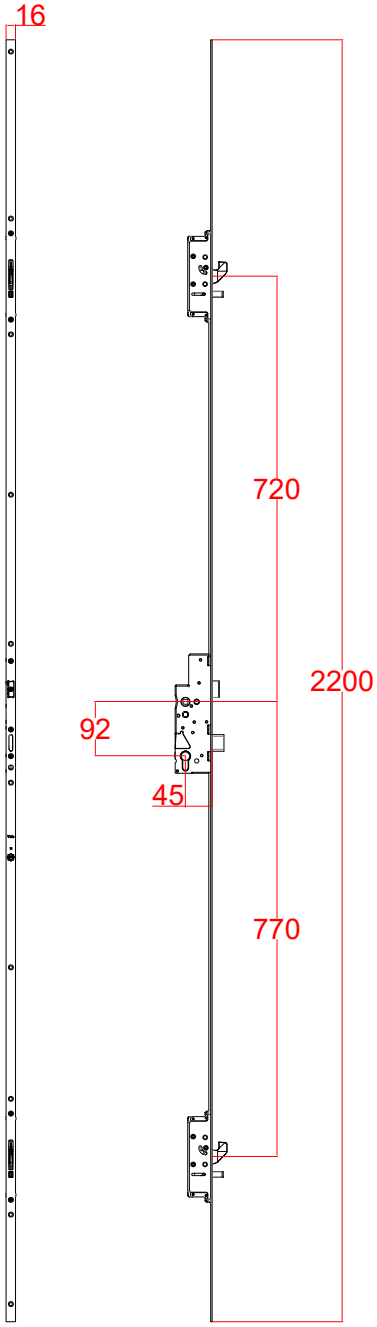

PAD90162

PAD90163

PAD90164

DESCRIPTION	CENTRE CASE	CENTRES	BACKSET	SPINDLE	ROLLER	HOOK & ANTI LIFT PINS	NO. OF KEEPS REQUIRED		PART CODE
							CENTRE	HOOK	
Lockmaster KeyTurn 16mm Square Faceplate	Latch & Deadbolt	92mm	45mm	Single	4	2	1	2	YAL20005

Lockmaster YLK18TH-45 Key Wind Up, KeyTurn Townhouse with 16mm Square Faceplate

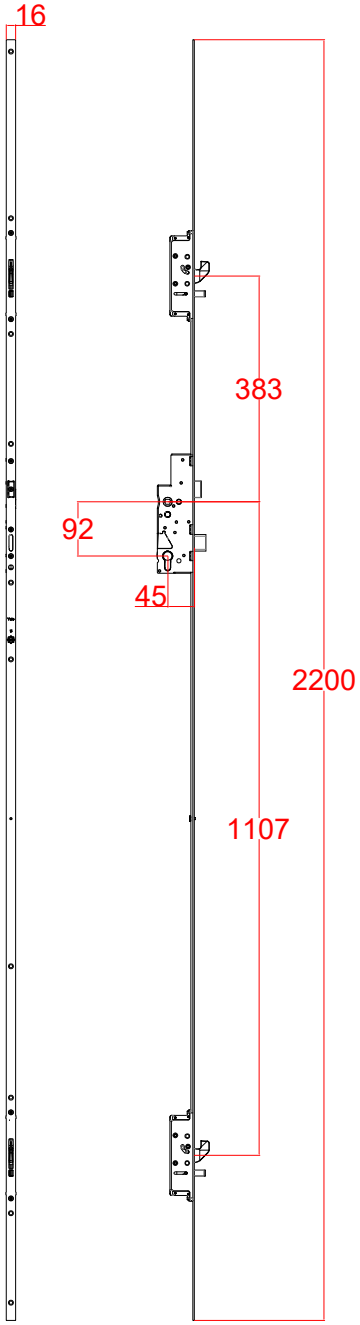

The Yale KeyTurn Townhouse wind up door lock for composite applications has the cylinder positioned at eye level, providing a traditional Yale look.

- All locking points operated by key
- Traditional feel
- Ideal for composite and timber doors
- PAS 24 compliant
- Police accredited (Secured By Design)

HANDLES TO SUIT
Pull Handles see pages 228-233

Escutcheon Plates & Cylinder Pulls
see pages 226-227

KEEPS TO SUIT

Composite Door Centre Keep Left Hand	Right Hand	Hook Keep Non-Handed
PAD90162	PAD90163	PAD90164

PAD90162

PAD90163

PAD90164

DESCRIPTION	CENTRE CASE	CENTRES	BACKSET	SPINDLE	HOOK & ANTI LIFT PINS	NO. OF KEEPS REQUIRED CENTRE	NO. OF KEEPS REQUIRED HOOK	PART CODE
Lockmaster KeyTurn 16mm Square Faceplate	Latch & Deadbolt	92mm	45mm	Single	2	1	2	YAL20005T

10 YEAR GUARANTEE MECHANICAL

SBD Approved

Lockmaster YLKT18 Key Wind Up, KeyTurn Contemporary with 20mm Radius Faceplate

Yale LOCKMASTER®

The Yale Contemporary Lock is a multipoint lock that provides a high performance locking mechanism without compromising the look of the door. It is designed to suit both contemporary or traditional applications.

- Operated by key wind mechanism
- Non handed
- Compatible with current Yale Lockmaster Keeps
- Works with standard euro profile cylinders
- Tested in excess of 200,000 cycles
- BS EN 1670 accredited, tested to 240 hours natural salt spray
- 12 month surface finish guarantee
- 10 year mechanical guarantee
- Meets the requirements of PAS 24
- Police accredited (Secured By Design)
- Designed and manufactured in the UK

KEEPS TO SUIT

Composite Door Centre Keep		**Hook Keep**
Left Hand	**Right Hand**	**Non-Handed**
PAD90162	PAD90163	PAD90164

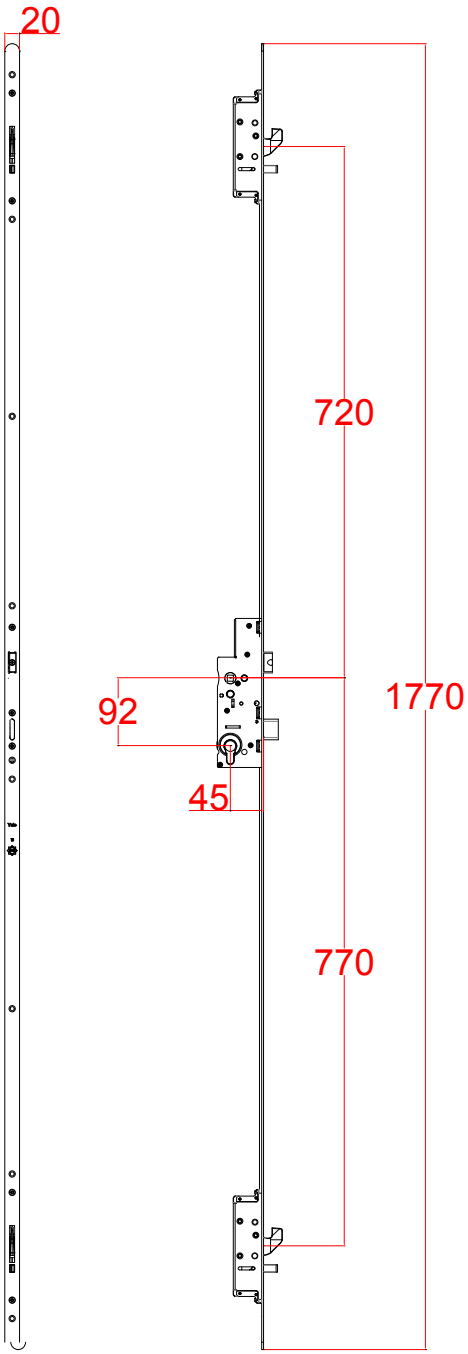

PAD90162

PAD90163

PAD90164

DESCRIPTION	CENTRE CASE	CENTRES	BACKSET	SPINDLE	HOOK & ANTI LIFT PINS	NO. OF KEEPS REQUIRED		PART CODE
						CENTRE	HOOK	
Lockmaster KeyTurn Contemporary 20mm Faceplate Radiused Ends	Latch & Deadbolt	92mm	45mm	Single	2	1	2	YAL20004

Lockmaster YLKT18-TH Key Wind Up, KeyTurn Townhouse with 20mm Radius Faceplate

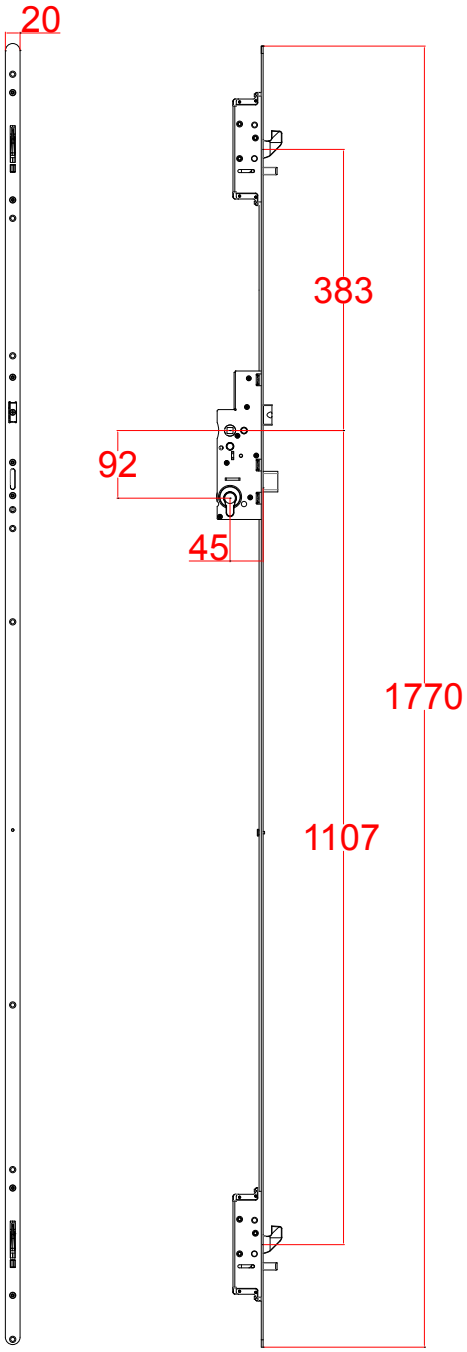

The Yale Contemporary Lock is a multipoint lock that provides a high performance locking mechanism without compromising the look of the door. It is designed to suit both contemporary or traditional applications.

- Operated by key wind mechanism
- Non handed
- Compatible with current Yale Lockmaster Keeps
- Works with standard euro profile cylinders
- Tested in excess of 200,000 cycles
- BS EN 1670 accredited, tested to 240 hours natural salt spray
- 12 month surface finish guarantee
- 10 year mechanical guarantee
- Meets the requirements of PAS 24
- Police accredited (Secured By Design)
- Designed and manufactured in the UK

HANDLES TO SUIT
Pull Handles see pages 228-233

Escutcheon Plates & Cylinder Pulls
see pages 226-227

KEEPS TO SUIT

Composite Door Centre Keep Left Hand	Right Hand	Hook Keep Non-Handed
PAD90162	PAD90163	PAD90164

PAD90162

PAD90163

PAD90164

DESCRIPTION	CENTRE CASE	CENTRES	BACKSET	SPINDLE	HOOK & ANTI LIFT PINS	NO. OF KEEPS REQUIRED CENTRE	NO. OF KEEPS REQUIRED HOOK	PART CODE
Lockmaster KeyTurn Contemporary 20mm Faceplate Radiused Ends	Latch & Deadbolt	92mm	45mm	Single	2	1	2	YAL20004T

10 YEAR GUARANTEE MECHANICAL

SBD Approved

Lockmaster YAS-4501-19 Slam Lock, AutoEngage Contemporary with 16mm Square Faceplate

Yale LOCKMASTER®

Secure from the second the door is shut – that's what Yale's Lockmaster AutoEngage multi-point door lock offers thanks to two security latches which automatically engage instantly from inde- pendent trigger points every time the door closes. Simply turn the key to engage the centre dead- bolt deadlock all locking points and fully secure the closed door. The gearbox is located midway down the door making it equally suitable for key or lever operated contemporary doors

- Key retractable auto engaging locking mechanism
- Available in 45mm backset
- 16mm Yale-branded faceplate
- Centre deadbolt operates independently and achieves 20mm secure engagement
- Security latches deliver 20mm full engagement automatically as the door is closed
- Non-handed for minimal stock holding
- Flexible gearbox facilitates key or lever operation
- Suitable for timber and composite doors

KEEPS TO SUIT

Composite Door Centre Keep		Latch Keep
Left Hand	**Right Hand**	**Non-Handed**
YAE90000	YAE90001	YAE90002

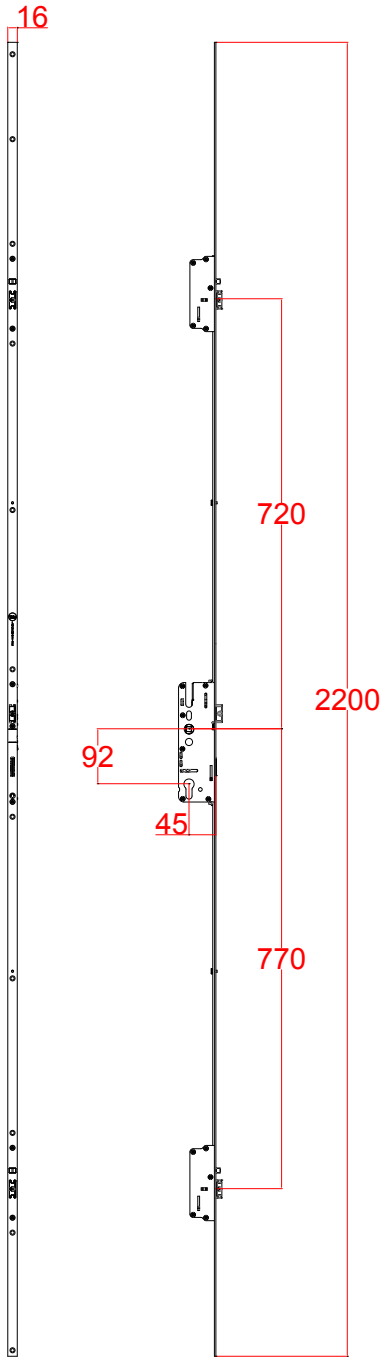

YAE90000

YAE90001

YAE90002

DESCRIPTION	CENTRE CASE	CENTRES	BACKSET	SPINDLE	ADDITIONAL LOCKING	NO. OF KEEPS REQUIRED		PART CODE
						CENTRE	LATCH	
Lockmaster AutoEngage Classic 16mm Square Faceplate	Latch & Deadbolt	92mm	45mm	Single	2 Security Latches	1	2	YAE14501

Yale LOCKMASTER®

Lockmaster YAS1-4503-19 Slam Lock, AutoEngage Heritage with 16mm Square Faceplate

10 YEAR GUARANTEE MECHANICAL

SBD Approved

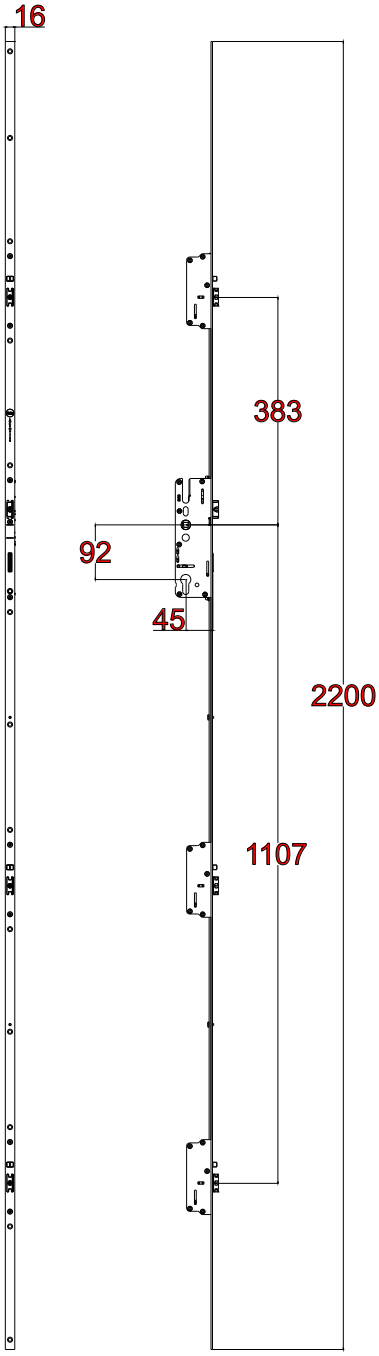

Achieve greater security from the get-go with the Yale Lockmaster AutoEngage. Every time the door is shut, three separate latch bolts are triggered independently with 20mm of latch engage- ment each. A centre deadbolt provides the fourth and final locking point. Simply turn the key, to engage the centre deadbolt, deadlock all the locking points and fully secure the closed door. This heritage option features a raised gearbox, making it perfectly suited to more traditional non-lever door styles commonly found on town houses and period properties. An extra security latch ensures even seal compression to prevent leaks or bowing.

- Key retractable auto engaging locking mechanism
- Available in 45mm backset
- 16mm Yale-branded faceplate
- Independently-operated centre deadbolt gives 20mm secure engagement
- Security latches engage by 20mm automatically every time the door is closed
- Non-handed for minimal stock holding
- Flexible gearbox enables key or lever operation
- Fits timber and composite doors

HANDLES TO SUIT
Pull Handles see pages 228-233

Escutcheon Plates & Cylinder Pulls
see pages 226-227

KEEPS TO SUIT

Composite Door Centre Keep		Latch Keep
Left Hand	**Right Hand**	**Non-Handed**
YAE90000	YAE90001	YAE90002

YAE90000

YAE90001

YAE90002

DESCRIPTION	CENTRE CASE	CENTRES	BACKSET	SPINDLE	ADDITIONAL LOCKING	NO. OF KEEPS REQUIRED		PART CODE
						CENTRE	LATCH	
Lockmaster AutoEngage Heritage 16mm Square Faceplate	Latch & Deadbolt	92mm	45mm	Single	3 Security Latches	1	3	YAE14503

10 YEAR GUARANTEE MECHANICAL

SBD Approved

Lockmaster YAS1-4502-19 Slam Lock, AutoEngage Contemporary with 20mm Radius Faceplate

Yale LOCKMASTER®

Secure from the second the door is shut – that's what Yale's Lockmaster AutoEngage multi-point door lock offers thanks to two security latches which automatically engage instantly from inde- pendent trigger points every time the door closes. Simply turn the key to engage the centre dead- bolt deadlock all locking points and fully secure the closed door. The gearbox is located midway down the door making it equally suitable for key or lever operated contemporary doors

- Key retractable auto engaging locking mechanism
- Available in 45mm backset
- 20mm Yale-branded faceplate
- Centre deadbolt operates independently and achieves 20mm secure engagement
- Security latches deliver 20mm full engagement automatically as the door is closed
- Non-handed for minimal stock holding
- Flexible gearbox facilitates key or lever operation
- Suitable for timber and composite doors

HANDLES TO SUIT
Pull Handles see pages 228-233

Escutcheon Plates & Cylinder Pulls
see pages 226-227

KEEPS TO SUIT

Composite Door Centre Keep		Latch Keep
Left Hand	**Right Hand**	**Non-Handed**
YAE90000	YAE90001	YAE90002

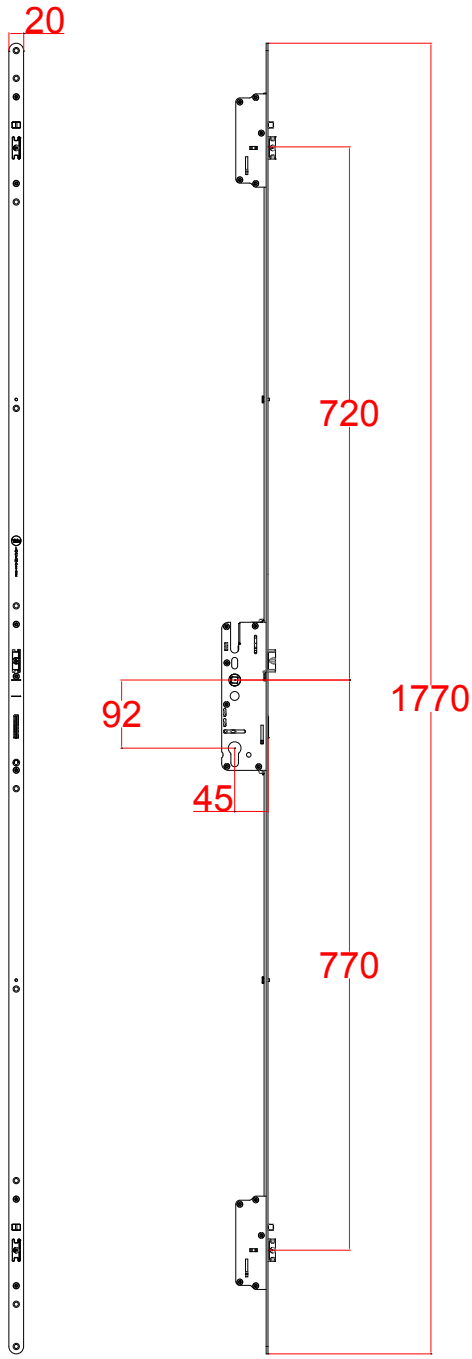

YAE90000

YAE90001

YAE90002

DESCRIPTION	CENTRE CASE	CENTRES	BACKSET	SPINDLE	ADDITIONAL LOCKING	NO. OF KEEPS REQUIRED		PART CODE
						CENTRE	LATCH	
Lockmaster AutoEngage Classic 20mm Faceplate Radiused Ends	Latch & Deadbolt	92mm	45mm	Single	2 Security Latches	1	2	YAE14502

Lockmaster YAS1-4504-19 Slam Lock, AutoEngage Townhouse with 20mm Radius Faceplate

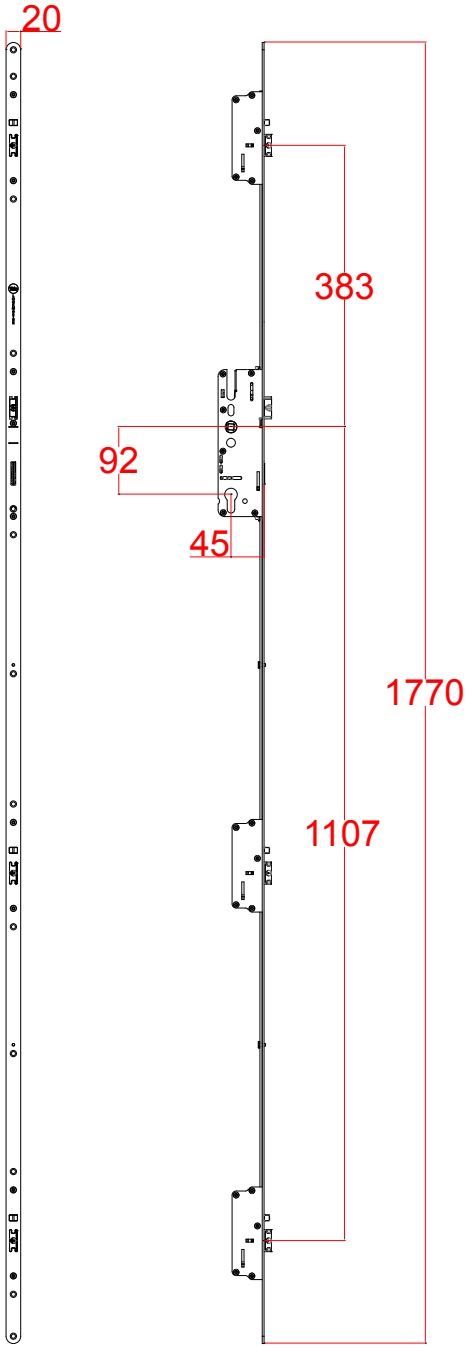

Achieve greater security from the get-go with the Yale Lockmaster AutoEngage. Every time the door is shut, three separate latch bolts are triggered independently with 20mm of latch engage- ment each. A centre deadbolt provides the fourth and final locking point. Simply turn the key, to engage the centre deadbolt, deadlock all the locking points and fully secure the closed door. This heritage option features a raised gearbox, making it perfectly suited to more traditional non-lever door styles commonly found on town houses and period properties. An extra security latch ensures even seal compression to prevent leaks or bowing.

- Key retractable auto engaging locking mechanism
- Available in 45mm backset
- 20mm Yale-branded faceplate
- Independently-operated centre deadbolt gives 20mm secure engagement
- Security latches engage by 20mm automatically every time the door is closed
- Non-handed for minimal stock holding
- Flexible gearbox enables key or lever operation
- Fits timber and composite doors

HANDLES TO SUIT
Pull Handles see pages 228-233

Escutcheon Plates & Cylinder Pulls
see pages 226-227

KEEPS TO SUIT

Composite Door Left Hand	Centre Keep Right Hand	Latch Keep Non-Handed
YAE90000	YAE90001	YAE90002

YAE90000

YAE90001

YAE90002

DESCRIPTION	CENTRE CASE	CENTRES	BACKSET	SPINDLE	ADDITIONAL LOCKING	NO. OF KEEPS REQUIRED		PART CODE
						CENTRE	LATCH	
Lockmaster AutoEngage Heritage 20mm Faceplate Radiused Ends	Latch & Deadbolt	92mm	45mm	Single	3 Security Latches	1	3	YAE14504

Avantis 10-year mechanical

SBD Approved

PAS 24 PASSED

650 Series Door Lock, 2 Hook, 2 Roller, Extendable

Avantis More than manufacturing

The Avantis 650 door lock has been rigorously tested to ensure unbeatable weatherproofing worthy of meeting current British Standard EN 1375, as well as superior security performance that's earned both the Secured by Design stamp of approval and PAS 24 compliance. Designed to last and backed by a 10-year mechanical guarantee, this proven lock provides robust, trouble-free operation perfectly suited to residential properties.

Features:
- 16mm faceplate, 35mm back set
- PZ92/62mm dual follower centre case
- Sash rebates: min. 1852mm (1688mm with reduced handle height). Max. 2200mm
- Class-leading compression: 25mm direct drive centre bolt & optional roller cams
- Accredited protection: large, strong security hooks and exclusive cylinder guard
- Profile-specific fully adjustable one-piece keeps for simple installation
- Suitable for PVCu doors

Guarantees and certifications:
- Tested to PAS 24 & BS 6375
- Secured by Design accredited
- Corrosion-resistant to EN 1670: grade 4
- Tested over 50,000 cycles with a 10-year mechanical guarantee

KEEPS TO SUIT

Profile Specific 1 Piece Keep

Left Hand	**Right Hand**
AVT260**L	AVT260**R

Shootbolt Keeps
AVT910**

* Note, for the correct keeps, please contact our sales office on 01234 242724.

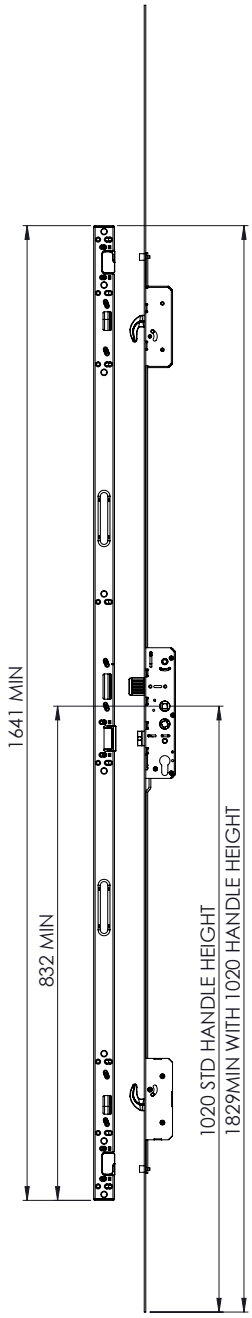

DESCRIPTION	CENTRE CASE	CENTRES	BACKSET	SPINDLE	ROLLER	HOOK	NO. OF KEEPS REQUIRED CENTRE	NO. OF KEEPS REQUIRED HOOK	PART CODE
650 Series, 16 x 2200mm Faceplate	Latch & Deadbolt	92/62mm	35mm	Twin	2	2	1 x One Piece Keep		AVT165001
650 Series, Extendable, 16 x 2200mm Faceplate	Latch & Deadbolt	92/62mm	35mm	Twin	2	2	1 x One Piece Keep		AVT165001S

750 Series Door Lock 2 Hookbolt, Composite or Timber

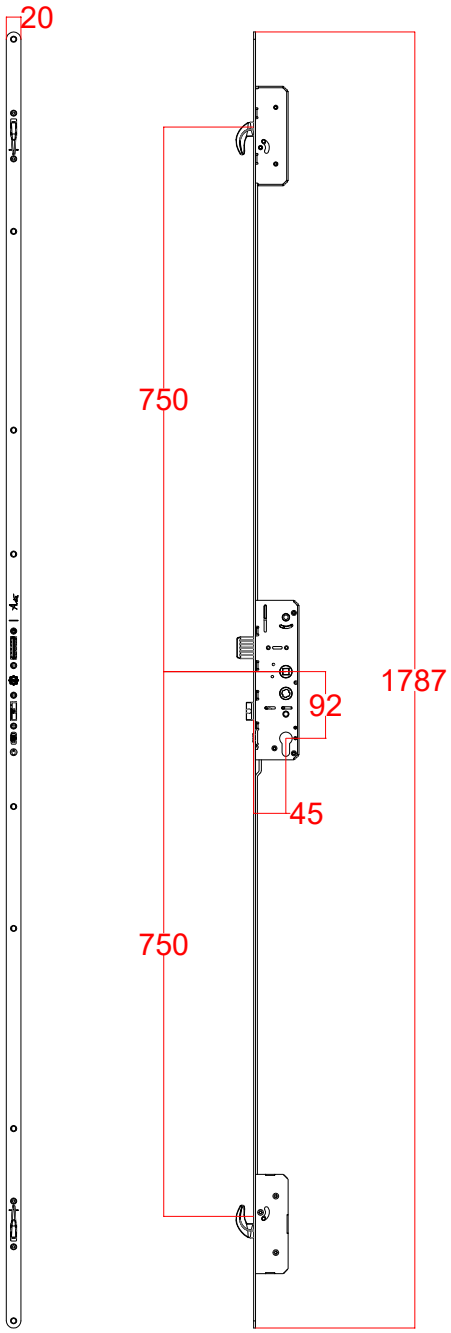

This high-security locking system for timber and compositive doors is armed with an impressive array of defences as standard. Every lock comes with Avantis' unique twin fix cylinder guard, which achieves anti-pick, anti-bump, anti-snap and anti-drill cylinder protection. In addition, the large hook and bolt system is capable of defeating even the most aggressive and determined attack, as well as ensure the door is pulled in top and bottom for a firm, even seal that prevents bowing.

Features:
- 16mm and 20mm faceplates, square and radius cut
- 35mm and 45mm back sets available
- PZ92/62mm dual follower centre case
- Sash rebates: min. 1852mm (1688mm with reduced handle height). Max. 2200mm
- Excellent compression: 25mm direct drive centre bolt & optional roller cams
- Accredited protection: large, strong security hooks and exclusive cylinder guard
- Profile-specific fully adjustable one-piece keeps simplify installation
- Suitable for timber and composite doors

Guarantees and certifications:
- Tested to PAS 24 & BS 6375
- Secured by Design accredited
- Corrosion-resistant to EN 1670: grade 4
- Tested over 50,000 cycles with a 10-year mechanical guarantee

KEEPS TO SUIT
Centre Latch & Hookbolt Keep

Left Hand	Right Hand	Hookbolt Keep
AVT30001	AVT30002	AVT30000

For the correct keeps, please contact our sales office on 01234 242724.

DESCRIPTION	CENTRE CASE	CENTRES	BACKSET	SPINDLE	HOOK	NO. OF KEEPS REQUIRED		PART CODE
						CENTRE	HOOK	
750 Series, 16 x 2200mm Radius End Faceplate	Latch & Deadbolt	92/62mm	35mm	Twin	2	1	2	AVT175001
750 Series, 20 x 2200mm Radius End Faceplate	Latch & Deadbolt	92/62mm	45mm	Twin	2	1	2	AVT175011

Avantis 10-year mechanical

SBD Approved

PAS 24 PASSED

550 Series French Door Lock, 2 Hook, 2 Roller, Extendable

Avantis More than manufacturing

Looking for a super-secure French door lock that's designed to last? The Avantis 550 series multi-point lock for offers some of the strongest SBD-accredited and PAS 24 approved reinforcements for double-door sets in the industry. Large opposing chamfered security hooks, a unique triangulated 25mm deep throw centre deadbolt, optional roller cams and strong, laminated high-security shootbolts all add up to even, weathertight compression and ultimate protection against forced entry.

Features:
- 16mm faceplate, 35mm back set
- PZ92/62mm dual follower centre case
- Sash rebates: min. 1852mm (1688mm with reduced handle height). Max. 2200mm
- Class-leading compression: 25mm direct drive centre bolt & optional roller cams
- Accredited protection: large, strong security hooks and unique cylinder guard
- Profile-specific fully adjustable one-piece shootbolt keeps ensure easy installation
- Unique French door keeps give increased clearance
- Suitable for PVCu doors

Guarantees and certifications:
- Tested to PAS 24 & BS 6375
- Secured by Design accredited
- Corrosion-resistant to EN 1670: grade 4
- Tested over 50,000 cycles with a 10-year mechanical guarantee

KEEPS TO SUIT
Profile Specific 1 Piece Keeps

Left Hand	**Right Hand**
AVT250**L	AVT250**R

Shootbolt Keeps
AVT910**

For the correct keeps, please contact our sales office on 01234 242724.

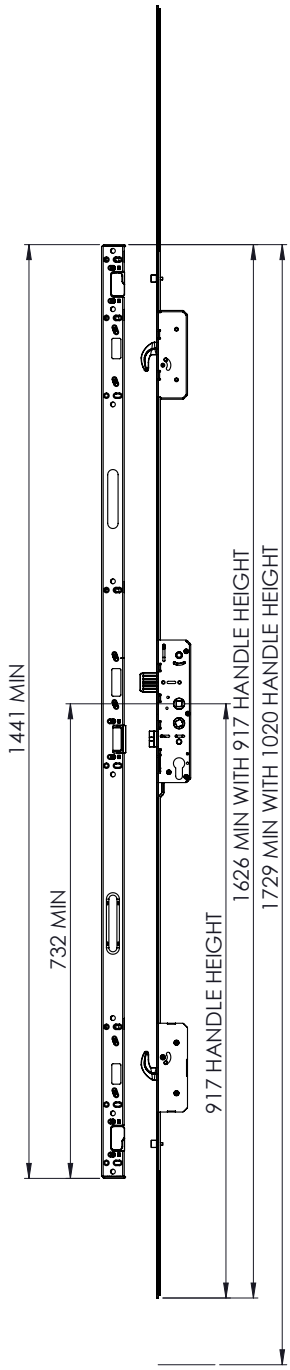

DESCRIPTION	CENTRE CASE	CENTRES	BACKSET	SPINDLE	ROLLER	HOOK	NO. OF KEEPS REQUIRED CENTRE	NO. OF KEEPS REQUIRED HOOK	PART CODE
550 Series, Extendable, 16 x 2200mm Faceplate	Latch & Deadbolt	92/62mm	35mm	Twin	2	2	1 x One Piece Keep		AVT155001S

550 Series French Door Slave Lock

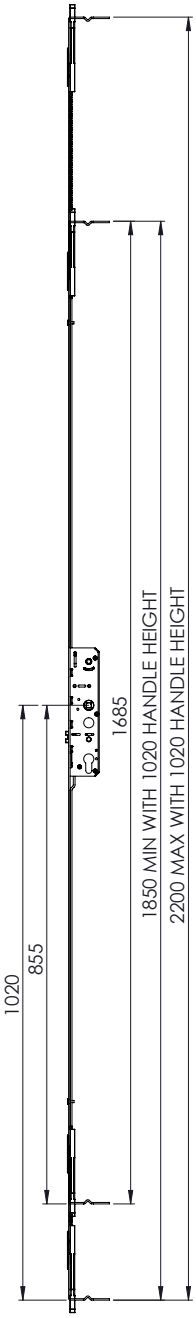

10-year mechanical

SBD Approved

PAS 24 PASSED

This slave door lock fits the secondary leaf on a French /double door configuration and works with the Avantis 550 series multi-point lock on the master door to deliver a super-secure, PAS 24 and SBD certified locking solution.

Features:
- 16mm faceplate, 35mm back set
- PZ92/62mm dual follower centre case
- Sash rebates: min. 1852mm (1688mm with reduced handle height). Max. 2200mm
- Profile-specific fully adjustable one-piece shootbolt keeps ensure easy installation
- Unique French door keeps give increased clearance
- Suitable for PVCu doors

Guarantees and certifications:
- Tested to PAS 24 & BS 6375
- Secured by Design accredited
- Corrosion-resistant to EN 1670: grade 4
- Tested over 50,000 cycles with a 10-year mechanical guarantee

KEEPS TO SUIT
Shootbolt Keeps
AVT910**

For the correct keeps, please contact our sales office on 01234 242724.

DESCRIPTION	CENTRE CASE	CENTRES	BACKSET	SPINDLE	ADDITIONAL LOCKING	NO. OF KEEPS REQUIRED SHOOTBOLTS	PART CODE
550 Series French Door Slave Lock 16 x 2200mm Faceplate	No Locking Points	92/62	35mm	Single	Shootbolts	2	AVT100000

PAS 24 PASSED

10 year warranty

C-TS 2 Hook, 2 Roller with 16x 1800mm Faceplate

- Highly secure multipoint locking system Lever/Lever Function
- Non handed lock design
- Forged steel dead locking hook bolts
- Passive hook design for security and not weather performance
- Compression and weather performance via MACO standard locking cams
- Faceplate length of 1800mm ideal for use as the master lock on a double door application
- PAS 24-2012 security tested
- MACO silver look surface treatment tested to 480 hours Class 5 EN 1670 corrosion resistance
- 10 year product warranty
- Endurance tested to 50,000 operations

HANDLES TO SUIT
HOPPE Atlanta 220 (page 245)
TROJAN Sparta 212 (page 238 & 240)
TROJAN PAS 24 (page 242)

For profile related keeps please speak to our sales department

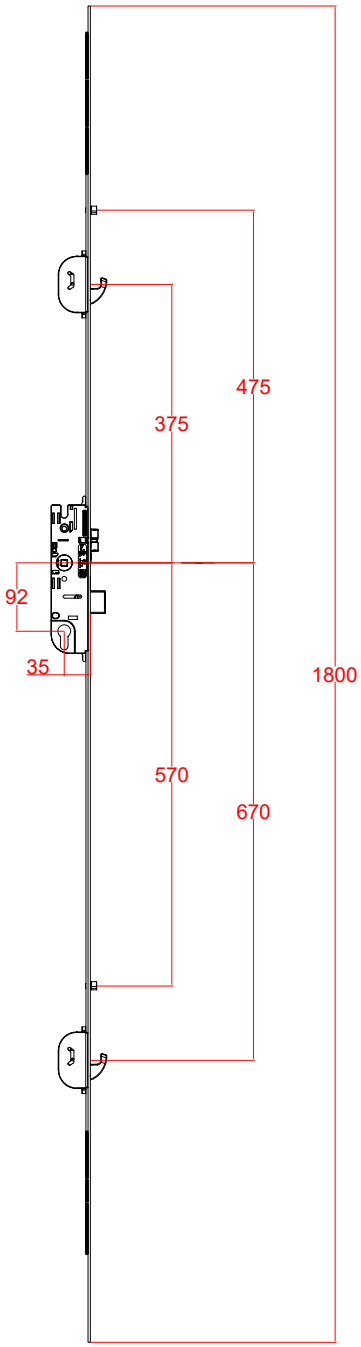

* Length of croppable teeth

DESCRIPTION	CENTRE CASE	CENTRES	BACKSET	SPINDLE	ROLLER	HOOK	NO. OF KEEPS REQUIRED CENTRE	NO. OF KEEPS REQUIRED HOOK	PART CODE
C-TS Door Lock 16 x 1800mm Faceplate	Latch & Deadbolt	92mm	35mm	Single	2	2	1	2	MAC242411

C-TS 2 Hook, 2 Roller with 16 x 2200mm Faceplate

10 year warranty

PAS 24 PASSED

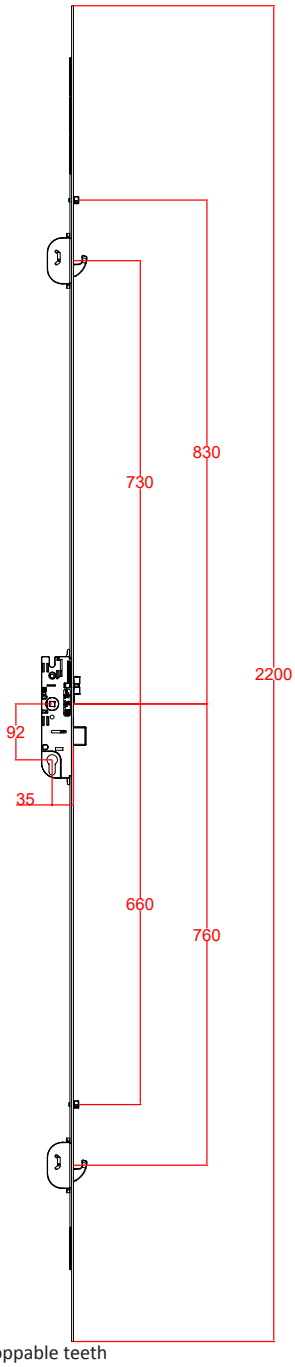

* Length of croppable teeth

- Highly secure multipoint locking system
- Non handed lock design
- Forged steel dead locking hook bolts
- Passive hook design for security and not weather performance
- Compression and weather performance via MACO standard locking cams
- Faceplate lengths available 2200mm for single doors
- PAS 24-2012 security tested
- MACO silver look surface treatment tested to 480 hours Class 5 EN 1670 corrosion resistance
- 10 year product warranty
- Endurance tested to 50,000 operations

HANDLES TO SUIT
HOPPE Atlanta 220 (page 245)
TROJAN Sparta 212 (page 238 & 240)
TROJAN PAS 24 (page 242)

For profile related keeps please speak to our sales department

DESCRIPTION	CENTRE CASE	CENTRES	BACKSET	SPINDLE	ROLLER	HOOK	NO. OF KEEPS REQUIRED CENTRE	NO. OF KEEPS REQUIRED HOOK	PART CODE
C-TS Door Lock 16 x 2200mm Faceplate	Latch & Deadbolt	92mm	35mm	Split (True)	2	2	1	2	MAC242371

PAS 24 PASSED

10 year warranty

C-TS Slave Door Lock

- Single function lock for use as a lift lever operated door lock
- Non handed lock design
- Faceplate lengths available 1500mm for double doors
- PAS 24-2012 security tested
- MACO silver look surface treatment tested to 480 hours Class 5 EN 1670 corrosion resistance
- 10 year product warranty
- Endurance tested to 50,000 operations

HANDLES TO SUIT
HOPPE Atlanta 220 (page 245)
TROJAN Sparta 212 (page 238 & 240)
TROJAN PAS 24 (page 242)

For profile related keeps please speak to our sales department
For shootbolts please see the table below

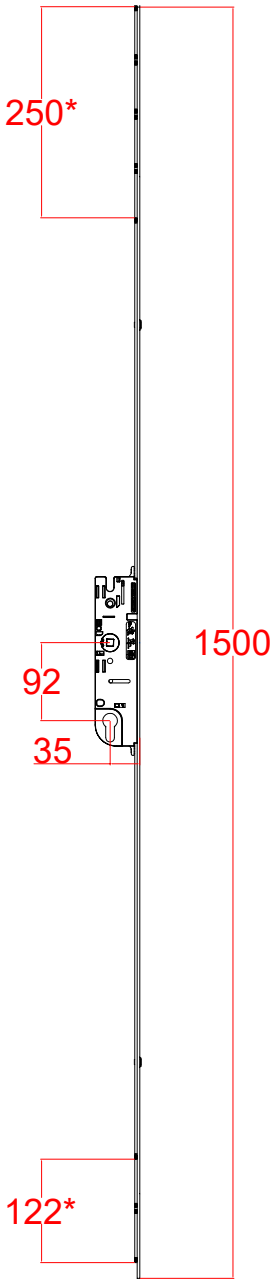

* Length of croppable teeth

DESCRIPTION	CENTRE CASE	CENTRES	BACKSET	SPINDLE		PART CODE
C-TS Slave Door Lock 16 x 1500mm Faceplate	No Locking Points	92mm	35mm	Single		MAC24351
C-TS Slave Door Lock 16 x 1500mm Faceplate	No Locking Points	92mm	45mm	Single		MAC243653

Z-TA Slam Lock 2 Hook with 20mm Faceplate

10 year warranty

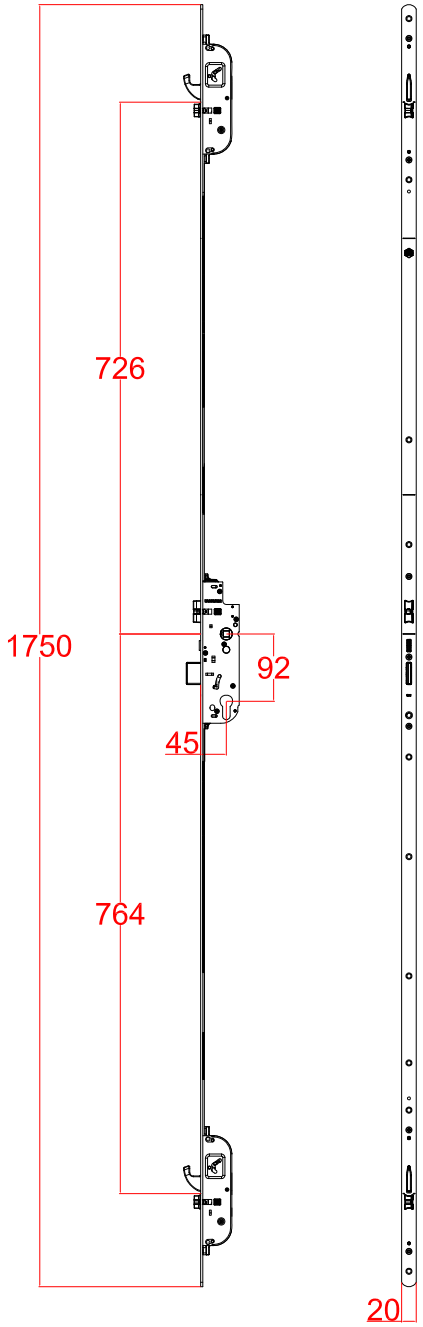

- The Z-TA door lock automatically throws the hook bolts once the door is shut
- Even gasket compression and security over the entire door height
- Additional security can be achieved by turning the key to block the lock mechanism
- 45mm backset with 20mm faceplate and radiused ends for composite/timber applications
- Key will retract all locking points upon turn

NB: Using a standard lever/lever handle allows access from both sides of the door even if the hook bolts have thrown - unless the key has been used to fully lock the door. We recommend that an external fixed pad handle is used with this door lock or that a lever fixing kit is supplied to stop the external handle from operating the door lock from outside

Routing prep available on request

KEEPS TO SUIT

Composite Door Centre Keep		**Hook Keep**
Left Hand	**Right Hand**	**Non-Handed**
MAC219483	MAC219481	MAC219482

MAC219483 MAC219481 MAC219482

DESCRIPTION	CENTRE CASE	CENTRES	BACKSET	SPINDLE	HOOK	NO. OF KEEPS REQUIRED		PART CODE
						CENTRE	HOOK	
Z-TA Door Lock, 20mm Faceplate Radiused Ends	Latch & Deadbolt	92mm	45mm	Single	2	1	2	MAC241672

10 year warranty

Z-TA VARIA Slam Lock 2 Hook with 20mm Faceplate

- The Z-TA Varia door lock automatically throws the hook bolts once the door is shut
- Even gasket compression and security over the entire door height
- Additional security can be achieved by turning the key to block the lock mechanism
- 45mm backset with 20mm faceplate and radiused ends for composite/timber applications
- Key will retract all locking points upon turn

Routing prep availble on request

HANDLES TO SUIT
Pull Handles see pages 228-233

Escutcheon Plates & Cylinder Pulls
see pages 226-227

KEEPS TO SUIT

Composite Door Centre Keep		Hook Keep
Left Hand	**Right Hand**	**Non-Handed**
MAC219483	MAC219481	MAC219482

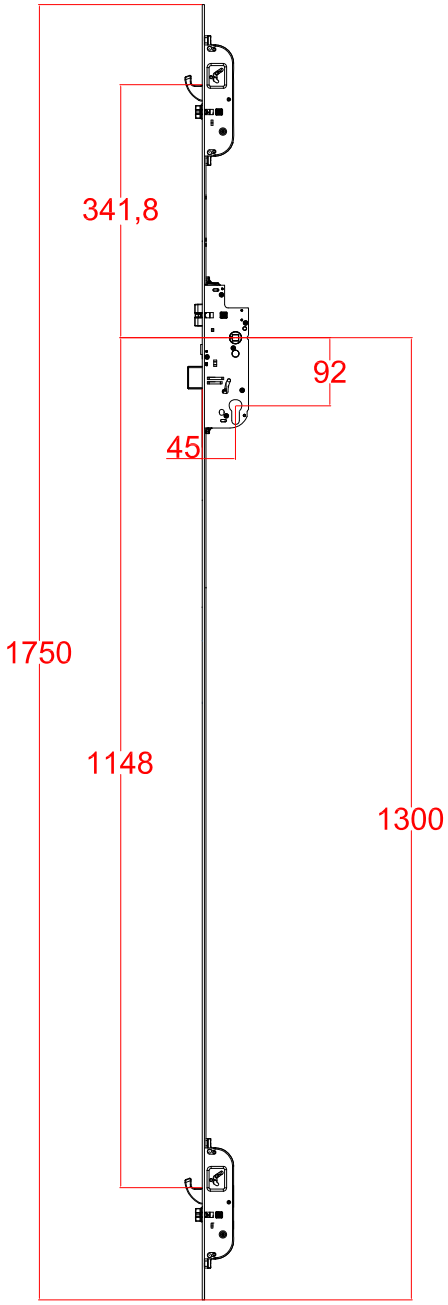

MAC219483

MAC219481

MAC219482

DESCRIPTION	CENTRE CASE	CENTRES	BACKSET	SPINDLE	HOOK	NO. OF KEEPS REQUIRED		PART CODE
						CENTRE	HOOK	
Z-TA Varia Door Lock, 20mm Faceplate Radiused Ends	Latch & Deadbolt	92mm	45mm	Single	2	1	2	MAC244592

GU Secury Automatic Slam Lock Standard Contempory Level Lockcase

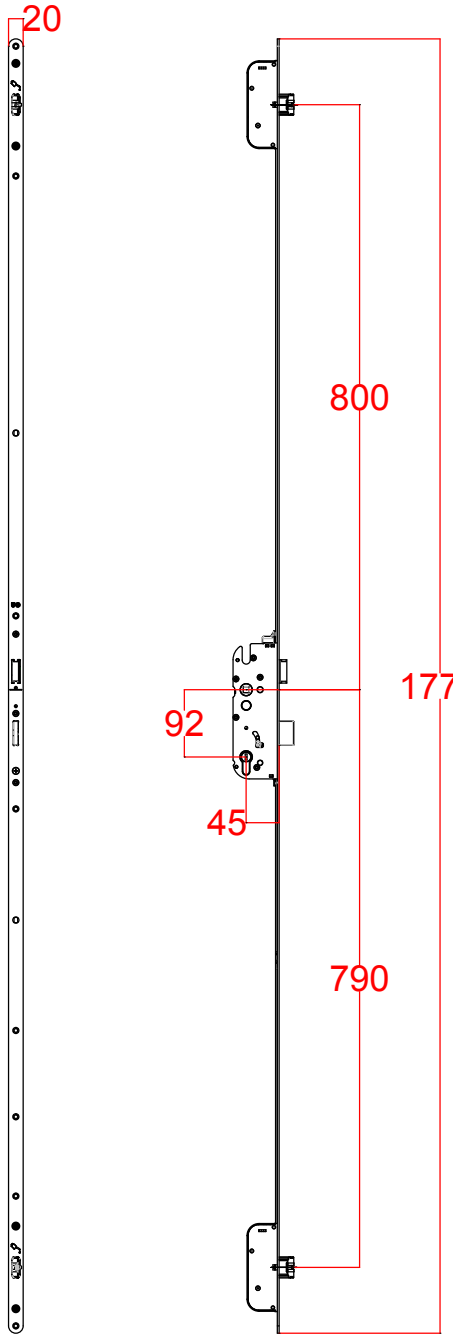

- 92mm centres
- 45mm backset
- 20mm wide radius ended faceplate
- Locking points automatically engage when the door is closed
- Non-handed fully reversible deadbolts & centre latch
- All bolts can be retracted via the cylinder
- PAS 23 & 24 Compliant
- Also available in Heritage "Classic" style gearbox position see next page

Routing prep available on request

KEEPS TO SUIT

Standard Lip = 8mm (44mm composite door)

Composite Door Left Hand	Centre Keep Right Hand	Deadbolt Keep Non-Handed
GSL10014L	GSL10014R	GSL10014

Longer Lip = 15mm (54mm composite door)

Composite Door Left Hand	Centre Keep Right Hand	Deadbolt Keep Non-Handed
GSL10009L	GSL10009R	GSL10010

GSL10014L

GSL10014R

GSL10014

DESCRIPTION	CENTRE CASE	CENTRES	BACKSET	SPINDLE	DEADBOLT	NO. OF KEEPS REQUIRED		PART CODE
						CENTRE	DEADBOLT	
Secury Standard Slam Lock, 20mm Faceplate Radiused Ends	Latch & Deadbolt	92mm	45mm	Single	2	1	2	GSL36037

GU Secury Automatic Slam Lock Heritage "Classic" High Level Lockcase

- 92mm centres
- 45mm backset
- 20mm wide radius ended faceplate
- Locking points automatically engage when the door is closed
- Non-handed fully reversible deadbolts & centre latch
- All bolts can be retracted via the cylinder
- PAS 23 & 24 Compliant
- Also available in standard handle height style gearbox position see previous page

Routing prep available on request

HANDLES TO SUIT
Pull Handles see pages 228-233

Escutcheon Plates & Cylinder Pulls
see pages 226-227

KEEPS TO SUIT
Standard Lip = 8mm (44mm composite door)

Composite Door Centre Keep		Deadbolt Keep
Left Hand	**Right Hand**	**Non-Handed**
GSL10014L	GSL10014R	GSL10014

Longer Lip = 15mm (54mm composite door)

Composite Door Centre Keep		Deadbolt Keep
Left Hand	**Right Hand**	**Non-Handed**
GSL10009L	GSL10009R	GSL10010

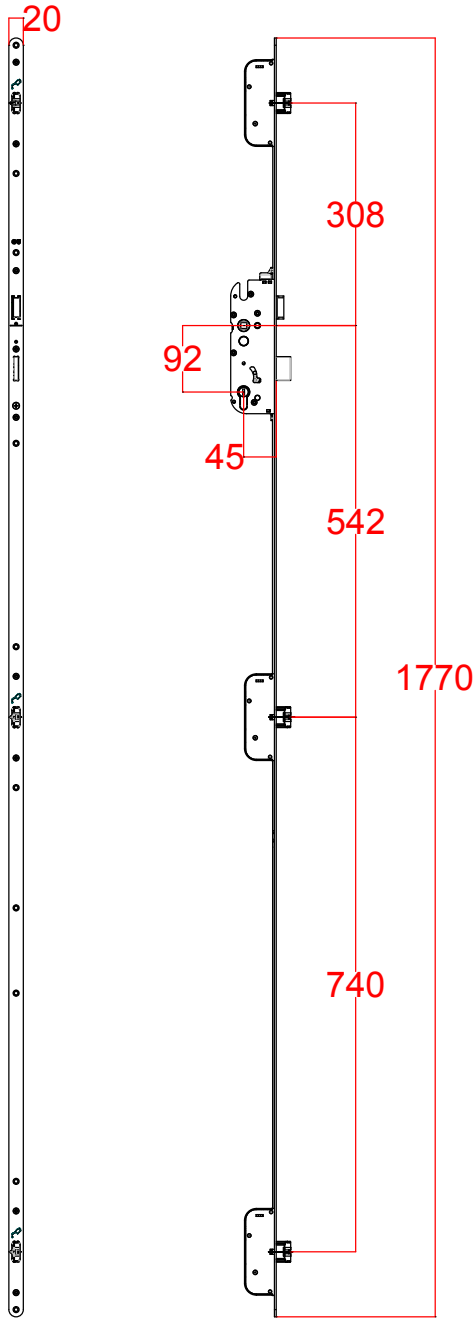

GSL10014L

GSL10014R

GSL10014

DESCRIPTION	CENTRE CASE	CENTRES	BACKSET	SPINDLE	DEADBOLT	NO. OF KEEPS REQUIRED		PART CODE
						CENTRE	DEADBOLT	
Secury Classic Slam Lock, 20mm Faceplate Radiused Ends	Latch & Deadbolt	92mm	45mm	Single	2	1	3	GSL37298

Electric Striker with Key Wind Up Door Lock Setup

SAMPLE SETUP

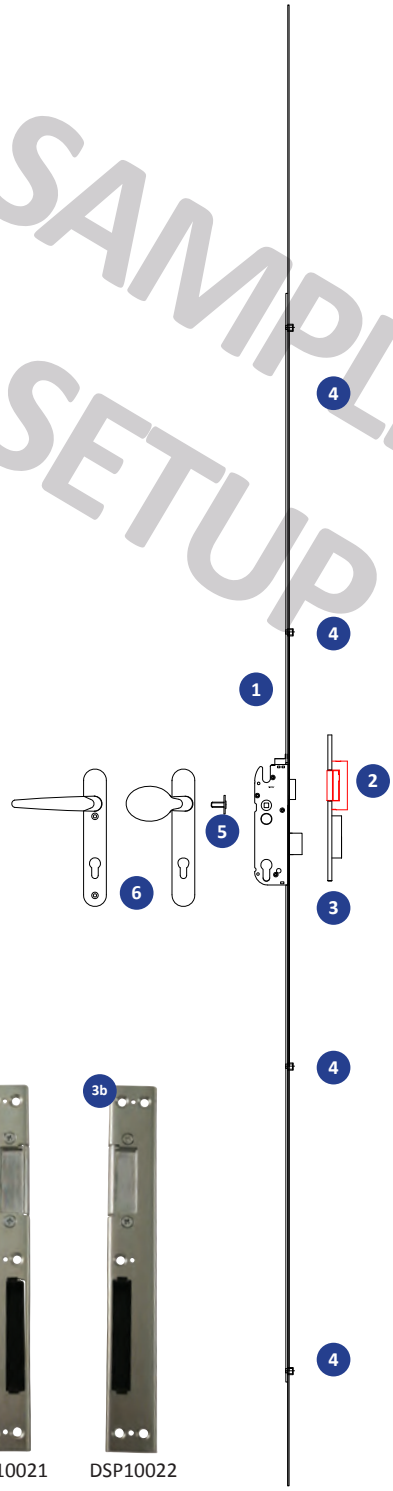

How this set up works:

- The wind up door lock allows for a basic security option to secure premises (Ideally suited for a set up where this is the second door into a building and the first door has a higher security level), the first person to enter the building will have to fully wind back the locking points. Once this is done the lock will be held on the latch which can only be released by use of a key or by the electric striker
- The electric striker can be wired into a button in an office or to a keypad set up (Not sold through Window Ware)
- The lever fixing kit allows for the external handle to be fixed into a permanent positioning meaning only people with keys or people let in through the intercom to enter. On the internal handle the spindle should be cut down and put into the lock spindle hole to allow for an unobstructed exit. It is also recommended that a thumb turn cylinder is fitted

	PART CODE	DESCRIPTION	BACKSET
1	GSB16135	Key Wind Up Lock	35mm
2 2a			
2b or	DSP046704	Electric Striker - Fail Safe	-
	DSP046703	Electric Striker - Fail Secure	-
3 3a			HANDING
3b or	DSP10021	Centre Keep	Left Hand
	DSP10022	Centre Keep	Right Hand
4	+ ######	Profile Related Roller Keep	-
5	HDL80190	Lever Fixing Kit	-
6	HDL9*012	Lever / Pad Door Handle (see pages 238-248)	
		(Alternatively a pull handle can be used)	

Key: # = Profile related items, please contact our Sales Office for part numbers

DSP046704 - Fail Safe

DSP046703 - Fail Secure

6-12v AC/DC

Fail-Secure Electric Striker

STRAND HARDWARE LIMITED
THE BEST WAY OUT...

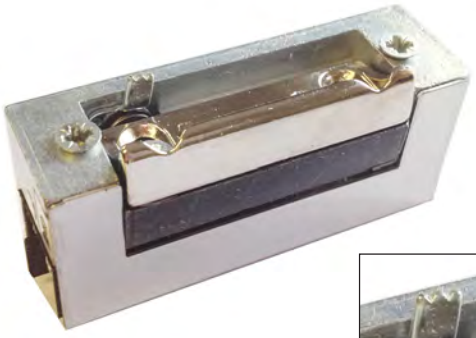

- Latch is released on electrical impulse and when power is discontinued the locking function automatically restores
- Fully reversible and adjustable latch
- Hold-open lever - for entry/exit
- For use with typical PVCu striker plates with 52mm centres

Specification:
- Voltage: 6-12v AC/DC
- Power Consumption: 0.5 - 0.8A
- Tested to: 300,000 cycles
- Holding Force: 400kg
- Dimensions: 69 x 21 x 29mm

FAIL SECURE	BOX QTY.
DSP046703	5

12v DC

Fail-Safe Electric Striker

STRAND HARDWARE LIMITED
THE BEST WAY OUT...

- The latch is held in the locked position continuously and when power is discontinued the latch will release - the locking function
  is restored when power is applied
- Fully reversible and adjustable latch Release
- For use with typical PVCu striker plates with 52mm centres

Specification:
- Voltage: 12v DC
- Power Consumption: 0.25A
- Tested to: 300,000 cycles
- Holding Force: 400kg
- Dimensions: 69 x 21 x 29mm

FAIL SAFE	BOX QTY.
DSP046704	1

CODELOCKS
control + convenience

CL500 Mechanical Keypad Exterior

- Heavy duty codelock for high access use
- Stainless steel PVD weather resistant, low maintenance finish
- Easy code change as often as required with 2047 codes to choose from
- Code free option available
- Vandal resistant, with stainless steel buttons and clutch protection if the outside handle is forced
- Inside handle always retracts latch for exit
- Reversible handle
- Complete with key code, tweezers, allen keys, escutcheon plates, spare code tumblers & screws
- Designed for timber applications out of the box. For PVCu applications you must take the DKP11001 spindle pack
- PVCu applications must also use a key wind-up bolt

DESCRIPTION	PART CODE
Keypad	DKP11000
Spindle Kit For 60/70Mm Thick Doors	DKP11001 (Pair)

ESC80009 ESC80001

ESC80005 ESC80000 ESC40001

Mechanical/Digital Keypad setup

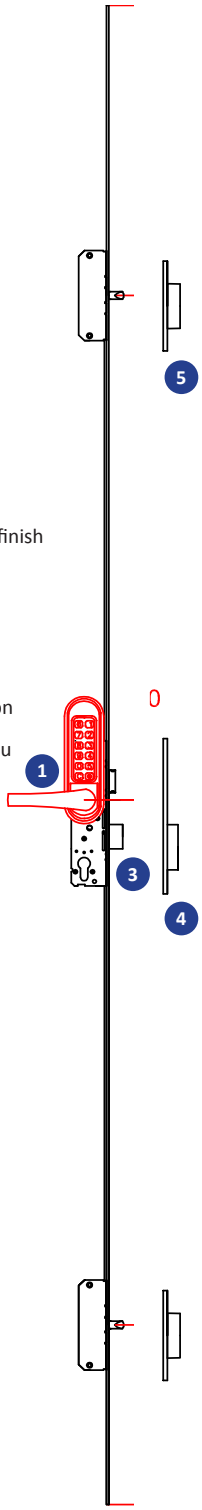

KEY	DESCRIPTION	PART CODE	
1	**Digital/ Mechanical Keypad** (comes as a set with internal and external handles provided)	**DKP1100**	
2	**PVC Spindle** (must be used on PVCu applications)	**DKP11001**	
3	**Wind Up Door Bolt with 35mm backset** (please note, not all profiles will accept a 35mm backset due to the overall width of the keypad which is 56mm including the seal that sits around the keypad)	**WDL10035S**	
4	**Centre Keep** If you are unsure about compatibility please speak to our Technical Team on 01234 242738	**DSP10021**	**Left Hand**
		DSP10022	**Right Hand**
5	**Pin Bolt Strikers** (2 required per kit)	**DSP10023**	
6	**Profile related packers** (7 required per kit - packers not shown)		
7	**PROFILE RELATED SCUTCHEON PLATE**		
	WHITE	ESC80000	2 Sets
	CHROME	ESC80001	2 Sets
	BLACK	ESC80005	2 Sets
	PVD GOLD	ESC80009	2 Sets
	SATIN STAINLESS STEEL	ESC40001	1 Single
8	Also available if required		
	Thumb Turn Cylinder see pages 218-225		

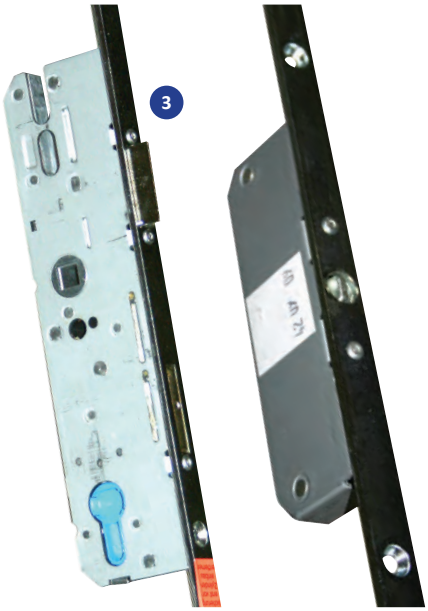

Key Wind Up 2 Pin Bolt Door Lock

- For use with the 500 Digital Key Pad
- Key wind up. All locking points work off the cylinder, although the handle will still retract the latch

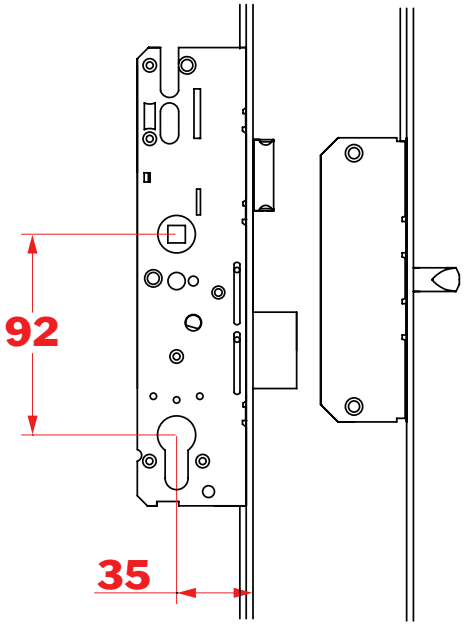

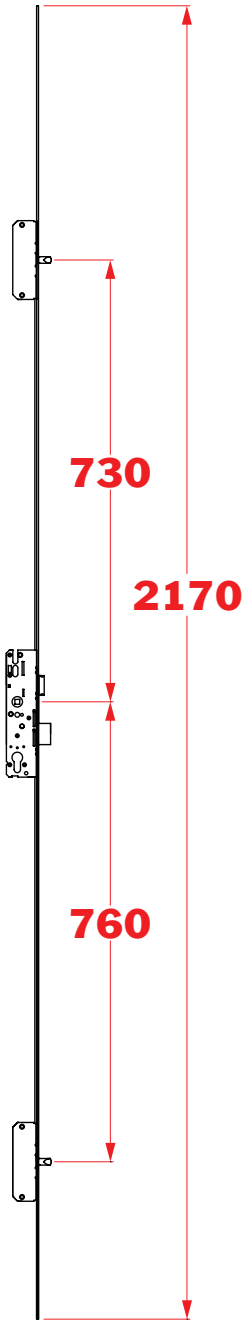

DESCRIPTION	CENTRE CASE	CENTRES	BACKSET	SPINDLE	ANTI SAW PIN BOLT	PART CODE
3 Key Wind-Up Pin Bolt Lock	Latch & Deadbolt	92mm	35mm	Wind Up	2	WDL10035S

Stable Door Lock

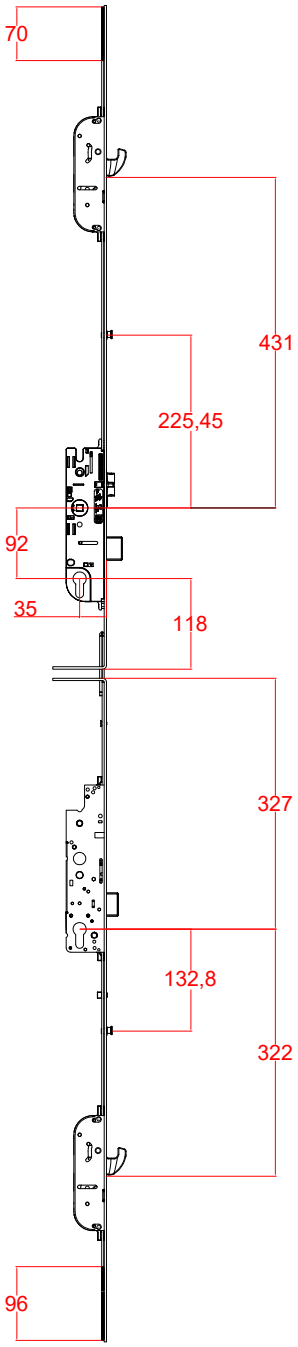

- 92mm Centre
- 35mm Backset
- Available in long and short pin versions
- Top lock operation Lever/Lever
- Bottom lock operation Key-wind
- 2 Hook-Bolts and 2 iS Cam locking

A secure and flexible method which allows you to meet the needs of a stable door whilst retaining security and weather tightness of a residential door lock.

KEEPS TO SUIT
Please contact our sales office on 01234 242724.

DESCRIPTION	TOP LOCK CASE	CENTRES	BACKSET	SPINDLE	BOTTOM LOCK CASE	i.S.ROLLER	HOOK	PIN SIZE	PART CODE
Stable Door, 16mm Faceplate	Latch & Deadbolt	92mm	35mm	Single	Key Wind	2	2	Short	MSD104706
Stable Door with Shootbolt 16mm Faceplate	Latch & Deadbolt	92mm	35mm	Single	Key Wind	2	2	Long	MSD104711

BBA Approved

Rhino, 2 Hook Bolt Stable Door Lock

- The GU Rhino Bolt is designed to be cropped and used as a stable door bolt
- Top leaf is operated by a normal door handle and is secured by the lock case with latch and deadbolt and top claw
- Bottom leaf is operated by an internal only tilt and turn handle and is secured by a claw and a roller cam
- The two leaves always operate independently but the door can open as one unit when a snapper catch is used
- The system can work as either an ''open–in'' or an ' 'open–out'' door

	PART CODE	DESCRIPTION		BACKSET
1	FER32486	GU G4 Rhino Bolt		35mm
or	or FER32487	GU G4 Rhino Bolt		28mm
+	GUL33905	Tidy Box for Deadbolt		-
				HANDING
+	GUL30014LS	Centre Latch/Deadbolt Keep		Left Hand
or	GUL30014RS	Centre Latch/Deadbolt Keep		Right Hand
+	GUL30013S	Hook Bolt Keep		Right Hand
+	GUL370##B	Profile Related Packers		-
+	#	Profile Related Roller Keep		-
2	GUT80874	Corner Transmission		
				BACKSET
3	GUP47512	Open In Drive Gear		15mm
or	GUT10225	Open Out Drive Gear		25mm*
	GUT10230	Open Out Drive Gear		30mm*
4	FER29498S	Clamping Piece		-
5	GUT26372S	Snapper Catch		-
6	GUT11952S	Snapper Catch Pin		-
			SPINDLE	FINISH
7	TBT11000	Locking Handle	30mm	WHITE
	TBT11002	Locking Handle	30mm	CHROME
	TBT11009	Locking Handle	30mm	GOLD
or	TBT11010	Locking Handle	50mm	WHITE
	TBT11012	Locking Handle	50mm	CHROME
	TBT11011	Locking Handle	50mm	SATIN SILVER
	TBT11029	Locking Handle	50mm	GOLD
+	ASMSM540Z	Machine Screws	-	-
	EXTENSIONS IF REQUIRED			LENGTH
8	GUT80625S	without Mushroom		250mm
or 9	GUT32142	with Mushroom		500mm

Key:
= Profile related items, please contact our Sales Office for part numbers

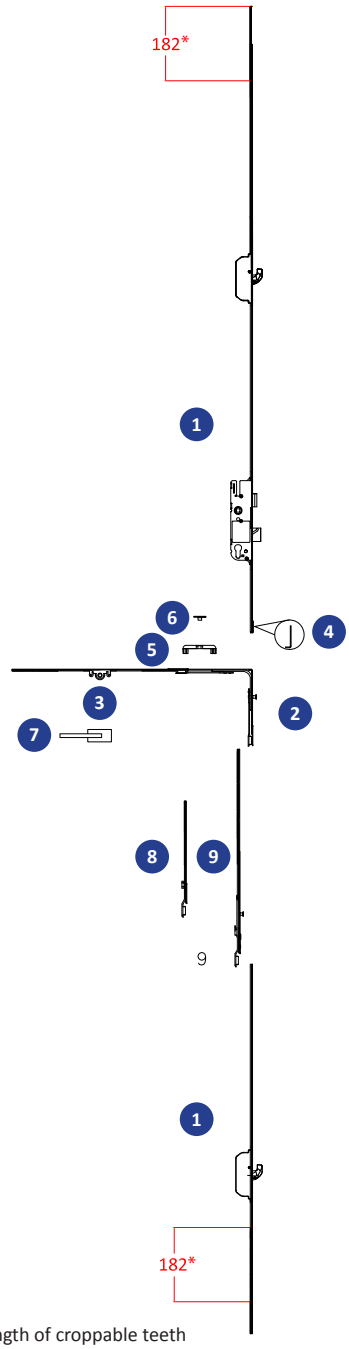

* Length of croppable teeth

DESCRIPTION	CENTRE CASE	CENTRES	BACKSET	SPINDLE	CLAW	NO. OF KEEPS REQUIRED CENTRE	CLAW	PART CODE
G4 1 Deadbolt 2 Claw Lever/Lever Sprung, 16mm Faceplate	Latch & Deadbolt	92mm	28mm	Single	2	1	2	FER32487
G4 1 Deadbolt 2 Claw Lever/Lever Sprung, 16mm Faceplate	Latch & Deadbolt	92mm	35mm	Single	2	1	2	FER32486

Inline Sliding Patio Door Lock 4 or 6 Hook Versions

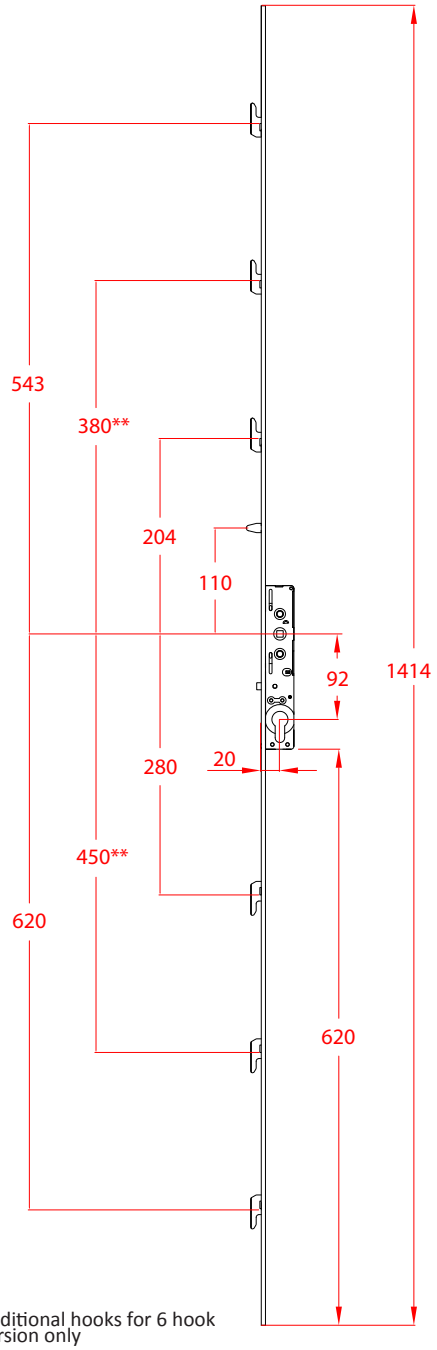

* Additional hooks for 6 hook version only

- Inline sliding patio door lock with four or six high security bi-parting hooks
- Anti-mishandling device as standard
- Lever operated hooks
- Profile cylinder deadlocking
- Static alignment probe also serves as an anti-lift device
- Non-handed system
- Silver Triklad finish
- Tested to over 100,000 cycles

4 Point Keep

6 Point Keep

KEEPS TO SUIT

PROFILE	4 POINT	6 POINT	BOX QTY.
Deceunick	WPL20011		10
Duraflex	WPL20006	WPL26001	10
Eurocell	WPL20012		10
KBE	WPL20004		10
Plastmo	WPL20005		10
Rehau		WPL26003	10
Smarts	WPL20008		10
Status	WPL20007		10
Synseal	WPL20002		10
Trocal	WPL20003		10
WHS	WPL20001	WPL26002	10
Wymar	WPL20010		10

Please contact our sales department for a packer to suit your profile

SHOOTBOLT EXTENSIONS

262mm	432mm	KIT	BOX QTY.
WPL11001	WPL11002	WPL11099	50

SHOOTBOLT KEEPS

PROFILE	PART CODE	BOX QTY.
Duraflex	PAD90115	100
Halo Eclipse	PAD90116	100

HANDLES TO SUIT
TROJAN Sparta Patio (see next page)

INLINE SLIDING PATIO ROLLERS

- Have an adjustment screw that can be loosened to raise the height of the rollers
- Maximum load 80kg per sliding panel (2 rollers fitted per sliding panel)

2.5mm	3mm	BOX QTY.
WPL30025	WPL30030	50

INLINE SLIDING PATIO DOOR STOP

WHITE	BROWN	BLACK	BOX QTY.
WPL49910	WPL49912	WPL49915	10

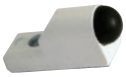

DESCRIPTION	CENTRE CASE	CENTRES	BACKSET	SPINDLE	HOOK	NO. OF KEEPS REQUIRED 1 PIECE KEEP	SHOOTBOLT	PART CODE
Inline Sliding Patio Door Lock	Latch Only	92mm	20mm	Single	4	1	2 if used	WPL10001
Inline Sliding Patio Door Lock	Latch Only	92mm	20mm	Single	6	1	2 if used	WPL10002

Inline Sliding Patio Handles

TROJAN ...The Strength of Hardware Design

- Modern stylish design
- Compliments the Sparta window and door handle range
- Locking and non-locking options
- Symmetrical grip for both left and right hand use
- Supplied with spindles and screws

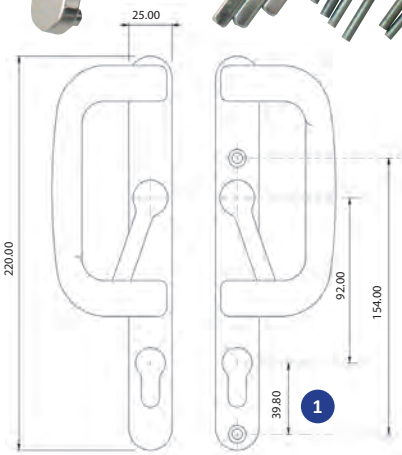

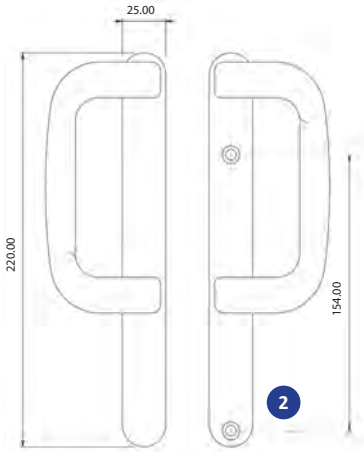

DESCRIPTION		WHITE	BLACK	GOLD	CHROME	SATIN SILVER	BOX QTY.
LOCKING	1	WPL41010	WPL41015	WPL41019	WPL41012	WPL41011	10
DUMMY	2	WPL41020	WPL41025	WPL41029	WPL41022	WPL41021	10

2 YEAR GUARANTEE MECHANICAL

Inline Sliding Patio Door Lock

Yale®

- Suitable for use on most sliding doors
- Comes with additional bolt tidy
- Offers an optional ventilation position
- Simply press the bolt in to lock and use keys supplied to unlock
- Comes complete with 2 keys and fixing screws
- 2 year guarantee

WHITE	GREY	BOX QTY.
YPL10000A	YPL10001A	1

Lockmaster Bi-fold Short with 24mm U-channel or AluK profile

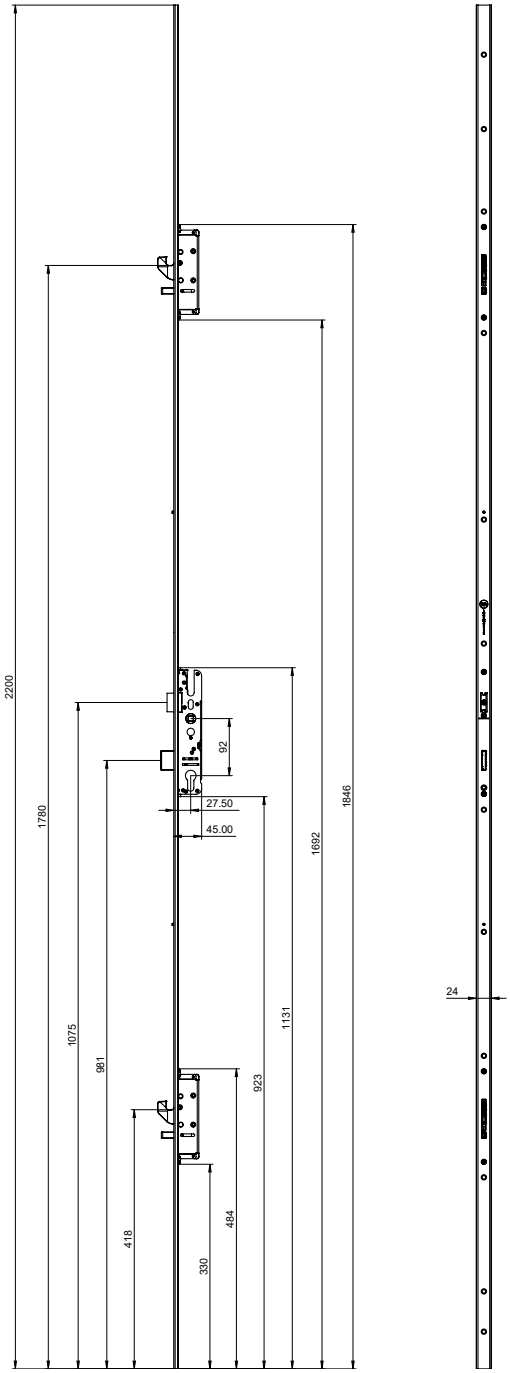

Yale's hugely popular multipoint locking system now comes in a slim 28mm backset gearbox specifically designed to secure aluminium bi-fold doors. This 24mm u-channel variant suits the AluK profile to give fabricators and installers a high-security, top-quality, user-friendly bi-fold locking solution that's backed by one of the best-known brands in the business for added confidence and peace of mind.

Key features

- 24mm Yale-branded u-channel variant to suit the AluK profile
- Lockmaster renowned twin hook and anti-lift bolts for enhanced security, strength & usability.
- Deadbolt centre with an easily reversible latch to minimise stock holding
- 28mm backset with PZ92mm centre case
- Slave mechanism for French doors also available
- 2 lock lengths for flexibility to fit a range of door heights
- Quality manufactured in Britain
- Box quantity – 5 locks

Guarantee & certifications:

- Secure - PAS 24: 2016 compliant
- Long service - Tested to 100,000 cycles with a 10-year mechanical guarantee
- Trusted - Yale Lifetime Security Guarantee
- Durable – Anti-corrosion performance tested to BS EN 1670:2007 Grade 4 with a 10-year surface finish guarantee

Material Specifications

- Lock Case: Galvanised Mild Steel
- Faceplate : Mild Steel, BZP and Clear Trivalent
- U-channel: Mild Steel CS4 – ST2473
- Deadbolt and Latchbolt: Zinc Alloy Casting
- Keeps : Mild Steel, BZP and Clear Trivalent

KEEPS TO SUIT
3 Piece Keep Set

Left Hand	**Right Hand**
YBF10003	YBF10004

DESCRIPTION	CENTRE CASE	CENTRES	BACKSET	SPINDLE	ROLLER	HOOK & ANTI LIFT PINS	NO. OF KEEPS REQUIRED		PART CODE
							CENTRE	HOOK	
Lockmaster Bi-fold - Short	Latch & Deadbolt	92mm	28mm	Single	2	2	1	2	YBF00428

10 YEAR GUARANTEE SURFACE & MECHANICAL

BBA Approved

SBD Approved

Lockmaster Bi-fold Long with 24mm U-channel for AluK profile

Yale

Yale's hugely popular multipoint locking system now comes in a slim 28mm backset gearbox specifically designed to secure aluminium bi-fold doors. This 24mm u-channel variant suits the AluK profile to give fabricators and installers a high-security, top-quality, user-friendly bi-fold locking solution that's backed by one of the best-known brands in the business for added confidence and peace of mind.

Key features

- 24mm Yale-branded u-channel variant to suit the AluK profile
- Lockmaster renowned twin hook and anti-lift bolts for enhanced security, strength & usability.
- Deadbolt centre with an easily reversible latch to minimise stock holding
- 28mm backset with PZ92mm centre case
- Slave mechanism for French doors also available
- 2 lock lengths for flexibility to fit a range of door heights
- Quality manufactured in Britain
- Box quantity – 5 locks

Guarantee & certifications:

- Secure - PAS 24: 2016 compliant
- Long service - Tested to 100,000 cycles with a 10-year mechanical guarantee
- Trusted - Yale Lifetime Security Guarantee
- Durable – Anti-corrosion performance tested to BS EN 1670:2007 Grade 4 with a 10-year surface finish guarantee

Material Specifications

- Lock Case: Galvanised Mild Steel
- Faceplate : Mild Steel, BZP and Clear Trivalent
- U-channel: Mild Steel CS4 – ST2473
- Deadbolt and Latchbolt: Zinc Alloy Casting
- Keeps : Mild Steel, BZP and Clear Trivalent

KEEPS TO SUIT
3 Piece Keep Set

Left Hand	**Right Hand**
YBF10003	YBF10004

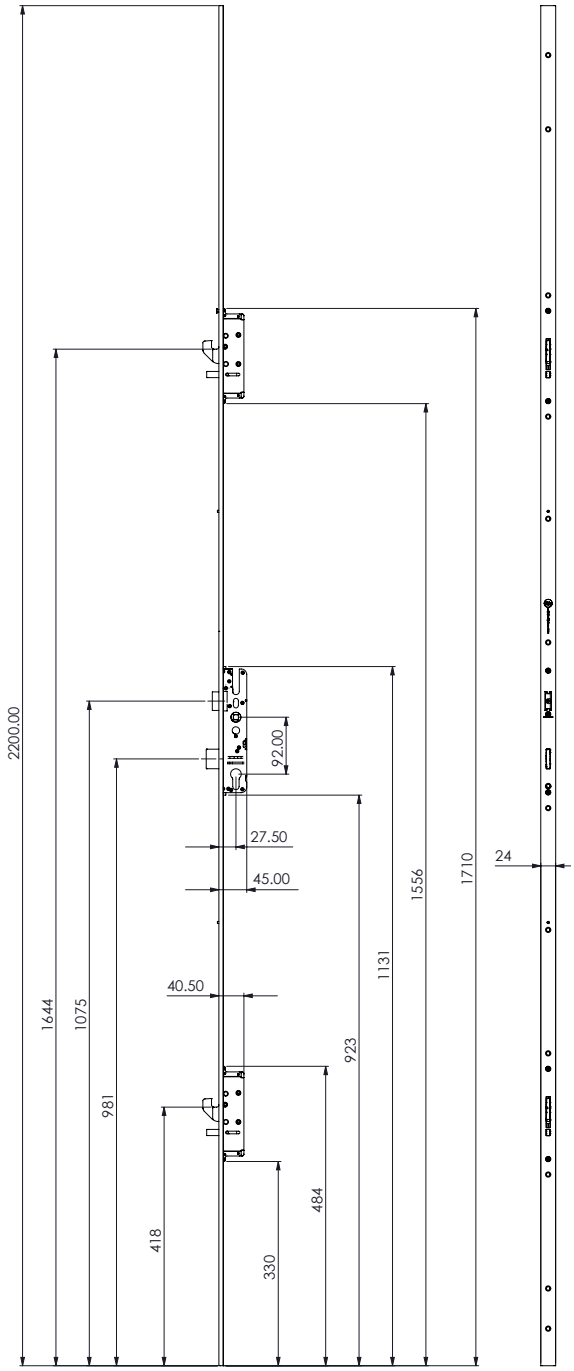

DESCRIPTION	CENTRE CASE	CENTRES	BACKSET	SPINDLE	ROLLER	HOOK & ANTI LIFT PINS	NO. OF KEEPS REQUIRED		PART CODE
							CENTRE	HOOK	
Lockmaster Bi-fold - Long	Latch & Deadbolt	92mm	28mm	Twin	2	2	1	2	YBF00528

Lockmaster Bi-fold Short with 16mm faceplate for Smarts & Exlabesa profiles

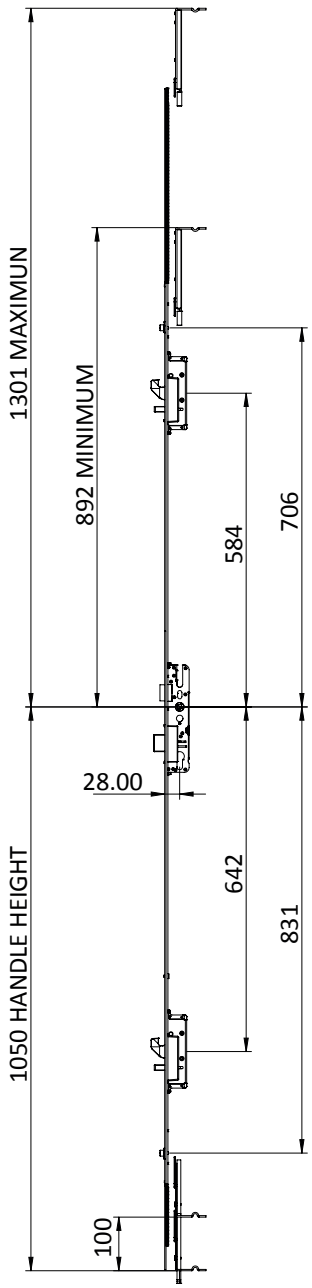

Yale's top-selling multipoint door lock now comes in a 28mm backset gearbox to fit modern narrow door sets and the slim sightline profiles of today's increasingly popular aluminium bi-fold doors. This 16mm euro groove version works with Smarts and Exlabesa profiles, to deliver industry-leading security, British quality, proven usability and long service life. For fabricators that already know and prefer the Lockmaster brand, this latest offering lets them suite across their entire door range.

Key features
- Standard Yale-branded 16mm faceplate to suit Smarts and Exlabesa profiles
- Lockmaster renowned twin hook and anti-lift bolts for enhanced security, strength & usability.
- Deadbolt centre with an easily reversible latch to minimise stock holding
- Pre-compression roller engagements cams achieve excellent weather-proofing
- 28mm backset with PZ92mm centre case
- Slave mechanism for French doors also available
- Quality manufactured in Britain
- Box quantity – 5 locks

Guarantee & certifications:
- Secure - PAS 24: 2016 compliant
- Long service - Tested to 100,000 cycles with a 10-year mechanical guarantee
- Trusted - Yale Lifetime Security Guarantee
- Durable – Anti-corrosion performance tested to BS EN 1670:2007 Grade 4 with a 10-year surface finish guarantee

Material Specifications
- Lock Case: Galvanised Mild Steel
- Faceplate : Mild Steel, BZP and Clear Trivalent
- U-channel: Mild Steel CS4 –ST2473
- Deadbolt and Latchbolt: Zinc Alloy Casting
- Keeps : Mild Steel, BZP and Clear Trivalent

KEEPS TO SUIT

1 Piece Keep includes packers for Smarts

Left Hand	Right Hand
YBF11241	YBF11242

1 Piece Keep without packers

Left Hand	Right Hand
YBF10001	YBF10002

Packers

Smarts	Exlabesa
PAD80124	PAD80027

DESCRIPTION	CENTRE CASE	CENTRES	BACKSET	SPINDLE	ROLLER	HOOK & ANTI LIFT PINS	NO. OF KEEPS REQUIRED		PART CODE
							CENTRE	HOOK	
Lockmaster Bi-fold	Latch & Deadbolt	92mm	28mm	Single	2	2	1 x One Piece Handed		YBF00128
Lockmaster Bi-fold - Slave	No Locking Points	92mm	28mm	Single	-	-	-	-	YBF00328

10 YEAR GUARANTEE SURFACE & MECHANICAL

BBA Approved

SBD Approved

Lockmaster Double Door Bi-fold Lock with 16mm Faceplate for Smarts & Exlabesa profiles

Yale's top-selling multipoint door lock now comes in a 28mm backset gearbox to fit modern narrow door sets and the slim sightline profiles of today's increasingly popular aluminium bi-fold doors. Available in a **16mm eurogroove** version which works with Smarts profile. For fabricators that already know and prefer the Lockmaster brand, this latest offering lets them suite across their entire door range.

Key features

- Standard Yale-branded **16mm eurogroove faceplate** to suit Smarts profile
- Lockmaster renowned twin hook with 20mm projection for enhanced security, strength & usability
- Deadbolt centre with an easily reversible latch to minimise stock holding
- Pre-compression roller engagements cams achieve excellent weather-proofing
- 28mm backset with PZ92mm centre case
- **16mm eurogroove** slave mechanism for French doors also available
- Yale Lockmaster 28mm 1-piece handed keep also available with or without packers **for standard 16mm eurogroove lock**
- Quality manufactured in Britain

Guarantee & certifications:

- Secure - PAS 24: 2016 compliant
- Long service - Tested to 100,000 cycles with a 10-year mechanical guarantee
- Trusted - Yale Lifetime Security Guarantee
- Durable - Anti-corrosion performance tested to BS EN 1670:2007 Grade 4 with a 10-year surface finish guarantee

Material Specifications

- Lock Case: Galvanised Mild Steel
- Faceplate : Mild Steel, BZP and Clear Trivalent
- U-channel: Mild Steel CS4 –ST2473
- Deadbolt and Latchbolt: Zinc Alloy Casting
- Keeps : Mild Steel, BZP and Clear Trivalent

KEEPS TO SUIT

1 Piece Keep includes packers for Smarts

Left Hand	Right Hand
YBF11243	YBF11244

1 Piece Keep without packers

Left Hand	Right Hand
YBF10001	YBF10002

Packers

Smarts	Exlabesa
PAD80124	PAD80027

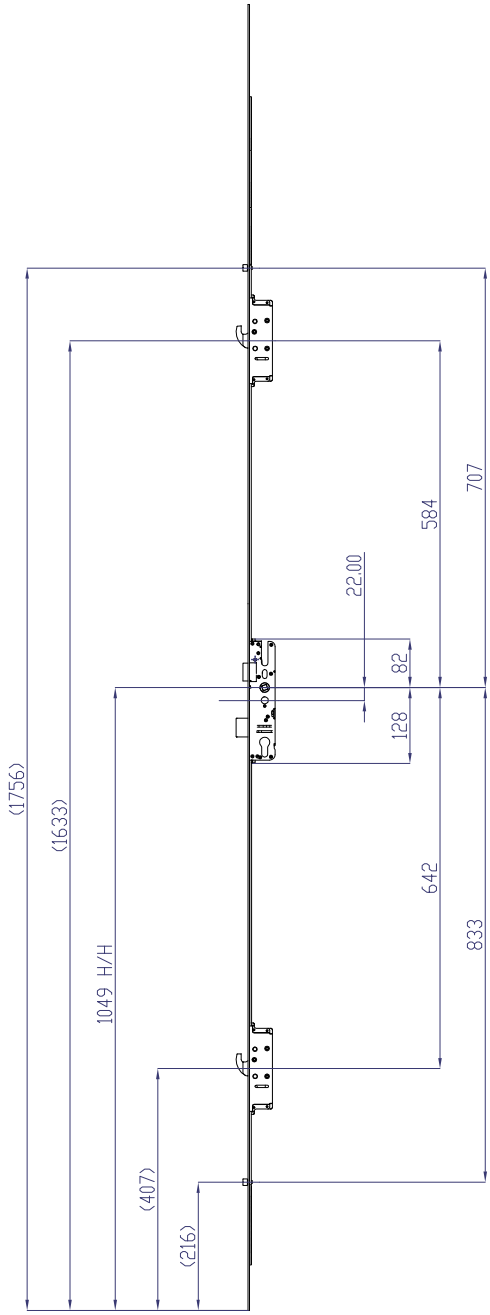

DESCRIPTION	CENTRE CASE	CENTRES	BACKSET	SPINDLE	ROLLER	HOOK	NO. OF KEEPS REQUIRED		PART CODE
							CENTRE	HOOK	
Lockmaster Double Door Bi-fold Lock, 16 x 2200mm Faceplate	Latch & Deadbolt	92mm	28mm	Single	2	2	1 x One Piece Handed		YBF00628

CALDWELL Bi-fold Hardware

100kg MAX PER PANEL

10 YEAR WARRANTY

PAS 24 PASSED

KEY	DESCRIPTION	PAGE NO.	KEY	DESCRIPTION	PAGE NO.
A	Top Guide Assembly	338	H1	Flat Door Handle with escutcheon	343
B	Roller Assembly	338	H2	Flat Door Handle without Escutcheon	343
C	Mullion Top Guide for Slave Door	339	J	Shootbolt Rods	343
D	Mullion Roller for Slave Door	339	K	Shootbolt Rod Cone	343
E	Door Hinge	341	L	Shootbolt Rod Guide	343
F1 & F2	Door Magnets	341	M	Shootbolt Gearbox	342
G1	D-Handle with Hinge	340	N	Shootbolt Gearbox Cover	342
G2	Stack-in D-Handle Hinge	340			

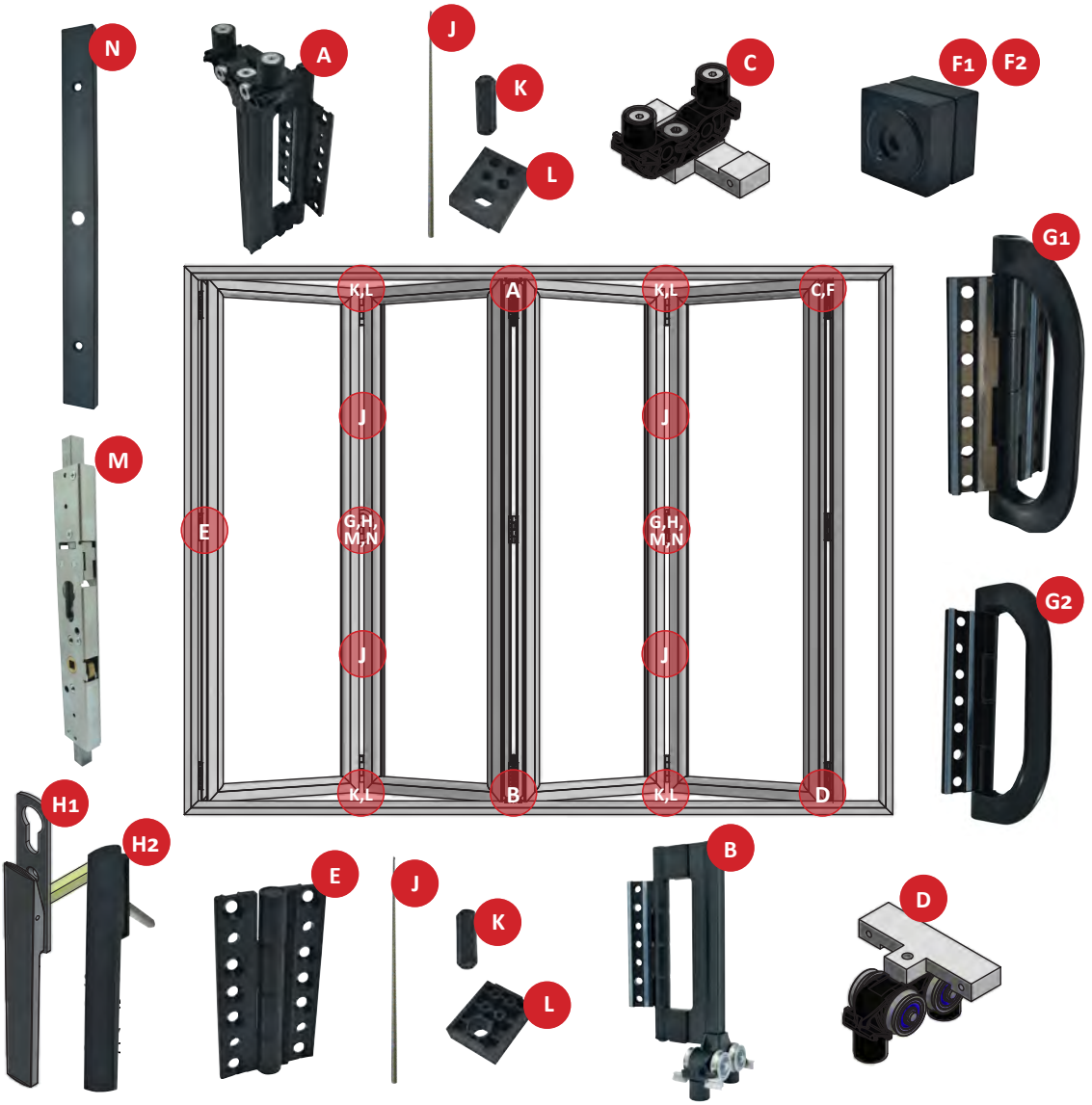

100kg MAX PER PANEL | 10 YEAR WARRANTY | Q Quality EN 9001:2015 | PAS 24 PASSED

Caldwell Bi-fold Hardware

Hardware to suit all folding door configurations and materials

Features:

- Complete range of hinges, handles, rollers and more
- High-quality components
- Strong and durable
- Smooth slide and open mechanism
- Fully tested to PAS 24

For further details please see pages 337 to 339 or contact our sales office on 01234 242724

Supporting fabricators with essential product information and fitting advice

When you choose fold and slide hardware from Caldwell, you get quality assured products that deliver class-leading mechanical and security performance as standard. All parts are…

- ✔ Security tested to PAS 24
- ✔ Rigorously tested and quality manufactured according to BS EN ISO 9001:2015
- ✔ Designed and built for strength and durability
- ✔ Suitable for door panels up to 100kg and 1200mm wide
- ✔ Covered by a 10-year manufacturer's warranty
- ✔ Ready-to-go with all fittings, fasteners and clamp plates included where required
- ✔ Supplied in boxes of 10 (excl. shootbolt rods, end guides and cones)
- ✔ Available in 4 standard finishes: Black RAL9005, HIPCA White, polished chrome and brushed steel
- ✔ Versatile to suit most door materials and configurations

Want to know more? Our fabricators bi-fold manual has all the answers!

Call sales on **01234 242724** to request your copy or download a PDF now at **windowware.co.uk/caldwell-literature**

This highly-detailed 28-page document is available to download or request free of charge and contains comprehensive information designed to help fabricators with product selection, system build and correct fitting. Inside, you'll find:

Features:

- Example PAS 24 layouts
- Product dimension and technical drawings
- Step-by-step fitting instructions
- Routing details for the Caldwell bi-fold shootbolt gearbox
- Recommended install order for an example layout
- Bi-fold door toe and heel guidance
- Manufacture warranty information
- Width to height ratios to prevent overload

REPLACEMENT DOOR LOCKS OVERVIEW

Yale® PART CODES	CENTRE CASE: LATCH & DEADBOLT	LATCH & HOOKBOLT	SLAVE	CENTRES (mm)	BACKSET (mm)	SPINDLE	SPRUNG	UN-SPRUNG	LOCKING POINTS: ROLLER	MUSHROOM	HOOK	ANTI-LIFT PINS	EXTENDABLE	FACEPLATE: LENGTH (mm)	WIDTH (mm)	ENDS: RADIUS	SQUARE	U-CHANNEL	PROFILE: PVCu	TIMBER/COMPOSITE	ALUMINIUM	MULTI-POINT LOCKS: LEVER OPERATED	CONTEMPORARY	HERITAGE	NIGHT LATCH	PAGE
YAL10000		•		92	35	Split (True)	•				2			2135	16	•			•			•	•		•	159
YAL10001		•		92	35	Split (True)	•		2	2				1518	16	•			•			•	•		•	160
YAL10003		•		92	45	Split (True)	•		2	2				1518	16	•			•			•	•		•	160
YAL10002		•		92	35	Split (True)	•		2		2			2065	16	•			•			•	•		•	161
YAL10004		•		92	45	Split (True)	•		2		2			2065	16	•			•			•	•		•	161
YAL10007		•		92	35	Split (True)	•		2		2			2065	16	•				•		•	•		•	161
YAL10008		•		92	45	Split (True)	•		2		2			2065	16	•				•		•	•		•	161
YAL10005		•		92	45	Split (True)	•		2		2			2065	20	•				•		•	•		•	161
PAD17200SS		•		92/62	35	Twin		•	4		2	2	•	2117	16		•		•			•	•		•	162
PAD17400SS	•			92	35	Single	•		4		2	2	•	2117	16		•		•			•	•		•	164
PAD17401SS	•			92/62	35	Twin		•	4		2	2	•	2117	16		•		•			•	•		•	164
PAD14301SS		•		92/62	35	Twin		•	4		2	2	•	2200	16		•		•			•	•		•	166
PAD14400SS	•			92	35	Single	•		4		2	2	•	2200	16		•		•			•	•		•	168
PAD13120SSP	•			92	35	Single	•		4		2	2		2200	16		•		•			•	•		•	170
PAD13121SS	•			92/62	35	Twin		•	4		2	2		2200	16		•		•			•	•		•	170
YLM45100		•		92	35	Single	•		2		2	2	•	2200	16		•		•			•	•		•	172
YLM45101		•		92/62	35	Twin		•	2		2	2	•	2200	16		•		•			•	•		•	172
PAD45121S	•			92/62	35	Twin		*	4		2	2	•	2219	16		•		•			•	•		•	174
PAD30100SS			•	92	35	Single	•							2219	16		•		•			•	•		•	176
PAD30101SS			•	92/62	35	Twin		•						2219	16		•		•			•	•		•	176
PAD30200SS			•	92	35	Single	•						•	2219	16		•		•			•	•		•	176
PAD30201SS			•	92/62	35	Twin		•					•	2219	16		•		•			•	•		•	176

WINK HAUS PART CODES	CENTRE CASE: LATCH & DEADBOLT	LATCH & HOOKBOLT	CENTRES (mm)	BACKSET (mm)	SPINDLE	SPRUNG	UN-SPRUNG	LEFT HANDED	RIGHT HANDED	LOCKING POINTS: ROLLER	HOOK	ANTI-LIFT PINS	EXTENDABLE	FACEPLATE: LENGTH (mm)	WIDTH (mm)	ENDS: RADIUS	SQUARE	PROFILE: PVCu	COMPOSITE	ALUMINIUM	MULTIPOINT LOCKS: LEVER OPERATED	CONTEMPORARY	HERITAGE	NIGHT LATCH	PAGE
WIN10001		•	92	35	Split (True)	•				2	2		•	2134	16		•	•			•	•		•	192
WIN24500L	•		92	45	Single	•		•			2			2105	16		•	•			•	•			193
WIN24500R	•		92	45	Single	•			•		2			2105	16		•	•			•	•			193
WIN25520L	•		92	55	Single	•		•			2			1770	20	•		•			•	•			194
WIN25520R	•		92	55	Single	•			•		2			1770	20	•		•			•	•			194
WIN33501S	•		92	35	Split (True)	•					2			2105	16		•		•		•	•		•	195
WIN34501S	•		92	45	Split (True)	•					2			2105	16		•	•			•	•		•	195
WIN33510S	•		92	35	Single	•					2			1770	20	•		•			•	•			196
WIN34510S	•		92	45	Single	•					2			1770	20	•			•		•	•			197
WIN34511S	•		92	45	Split (True)	•					2			1770	20	•			•		•	•		•	197
WIN35511S	•		92	55	Split (True)	•					2			1770	20	•			•		•	•		•	197
WIN43501S	•		92	35	Split (True)	•					2			2105	16		•	•			•	•		•	198

PART CODES	CENTRE CASE							LOCKING POINTS					FACEPLATE				PROFILE			MULTIPOINT LOCKS					PAGE
	LATCH & DEADBOLT	LATCH ONLY	CENTRES (mm)	BACKSET (mm)	SPINDLE	SPRUNG	UN-SPRUNG	ROLLER	MUSHROOM	HOOK/CLAW	DEADBOLT	EXTENDABLE	LENGTH (mm)	WIDTH (mm)	ENDS: RADIUS	ENDS: SQUARE	PVCu	TIMBER	ALUMINIUM	LEVER OPERATED	KEY WIND UP	CONTEMPORARY	HERITAGE	NIGHT LATCH	
FER28000S		•	70	28	Single	•		4					2200	16		•	•			•		•			179
FER25000S		•	70	35	Single	•		4					2200	16		•	•			•		•			179
FER21138	•		70	40	Single	•				2			2149	20	•			•		•		•			180
FER11997	•		70	50	Single	•				2			2149	20	•			•		•		•			180
FER32686	•		92	35	Single	•		2				•	1830	16		•	•			•		•			181
FER32688	•		92	35	Single	•		2				•	1830	16		•	•			•		•			182
FER32581	•		92	28	Single	•		4					2285	16		•	•			•		•			183
FER32580	•		92	35	Single	•		4					2285	16		•	•			•		•			183
FER32694	•		92	35	Split (True)	•		4					2285	16		•	•			•		•		•	183
FER32771	•		92	28	Split (True)	•		2	2			•	2285	16		•	•			•		•		•	184
FER32770	•		92	35	Single	•		2	2			•	2285	16		•	•			•		•			184
FER32487	•		92	28	Single	•				2		•	2285	16		•	•			•		•			185
FER32486	•		92	35	Single	•				2		•	2285	16		•	•			•		•			185
FER32600	•		92	35	Split (True)	•				2		•	2285	16		•	•			•		•		•	186
FER32602	•		92	35	Single	•		2		2		•	2285	16		•	•			•		•			186
FER32610	•		92	35	Split (True)	•		2		2		•	2285	16		•	•			•		•		•	186
FER324804	•		92	40	Single	•				2			2285	16		•	•			•		•			187
FER324805	•		92	45	Single	•				2			2285	16		•	•			•		•			187
FER32755	•		92	28	Single	•					2	•	2285	16		•	•			•		•			188
FER32754	•		92	35	Single	•					2	•	2285	16		•	•			•		•			188
FER32219	•		92	28	Single	•					2		2285	16		•	•			•		•			189
FER32218	•		92	35	Single	•					2		2285	16		•	•			•		•			189
FER32570	Slave		92	35	Single	•						•	1830	16		•	•			•		•			190
GSB16126S	•		92	26	Single	•		4					2285	16		•	•				•	•			191
GSB16130	•		92	30	Single	•		4					2285	16		•	•				•	•			191
GSB16135	•		92	35	Single	•		4					2285	16		•	•				•	•			191
GSB16145S	•		92	45	Single	•		4					2285	16		•	•				•	•			191

PART CODES	CENTRE CASE							LOCKING POINTS						FACEPLATE				PROFILE			MULTIPOINT LOCKS					PAGE
	LATCH & DEADBOLT	LATCH & HOOKBOLT	CENTRES (mm)	BACKSET (mm)	SPINDLE	SPRUNG	UN-SPRUNG	ROLLER	MUSHROOM	HOOK	LINEAR BOLT	DEADBOLTS	EXTENDABLE	LENGTH (mm)	WIDTH (mm)	ENDS: RADIUS	ENDS: SQUARE	PVCu	COMPOSITE	ALUMINIUM	LEVER OPERATED	CONTEMPORARY	HERITAGE	NIGHT LATCH	
MIL10001		•	117/86	35	Twin			2		2	2			2200	16		•	•			•	•			199
full'ex																									
FUL10002	•		68	45	Twin		•					2		1720	20	•			•		•	•		•	200
FUL16074	•		68	55	Single	•						2		1770	20	•			•		•	•			201
FUL16009	•		68	35	Single	•						2		2200	16		•	•			•	•			202
FUL16017	•		68	35	Split	•						2		2200	16		•	•			•	•		•	203

REPLACEMENT LOCKCASES

PART CODES	BRAND	CENTRE CASE: LATCH & DEADBOLT	CENTRE CASE: LATCH & HOOKBOLT	CENTRE CASE: CENTRES (mm)	CENTRE CASE: BACKSET (mm)	CENTRE CASE: SPINDLE	CENTRE CASE: SPRUNG	CENTRE CASE: UN-SPRUNG	PAGE
PAD99999HK	Yale		•	92/62	35	Twin		•	156
PAD99945S	Yale	•		92	45	Single	•		156
PAD99945U	Yale	•		92/62	45	Twin		•	156
PAD99999S	Yale	•		92	35	Single	•		156
PAD99999U	Yale	•		92/62	35	Twin		•	156
YGB10001	Yale	•		92	35	Single	•		157
YGB10003	Yale		•	92/62	35	Twin		•	157
FGB10002	Fullex		•	92/62	35	Twin		•	157
FGB10003	Fullex		•	92/62	45	Twin		•	157
FGB10000	Fullex	•		68	37	Single	•		157
FGB10001	Fullex	•		68	35	Single	•		157
MGB10000	MACO	•		92	35	Single	•		158
FUH10000	Fuhr	•		92	35	Split (True)	•		158
ERA20035	ERA	•		92	35	Twin		•	158
ERA20045	ERA	•		92	45	Twin		•	158
YGB10000A	GU	•		92	28	Twin		•	158
YGB10000	GU	•		92	35	Single	•		158

Un-sprung Hookbolt 35mm BS Lockcase LOCKMASTER®

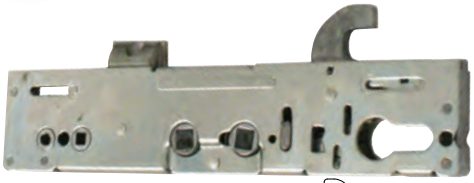

- Part of the Lockmaster range of replacement hardware
- Designed to suit Lockmaster multipoint locks with centre hook

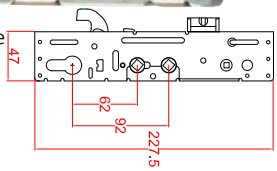

BACKSET	SPINDLE	CENTRES	PART CODE
35mm	TWIN	92/62mm	PAD99999HK

Sprung 45mm BS Lockcase LOCKMASTER®

- Part of the Lockmaster range of replacement hardware
- Designed to suit Lockmaster multipoint locks

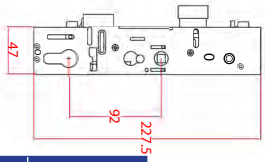

BACKSET	SPINDLE	CENTRES	PART CODE
45mm	Single	92mm	PAD99945S

Un-sprung 45mm BS Lockcase LOCKMASTER®

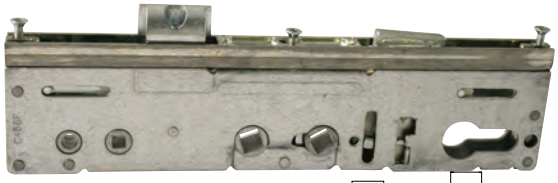

- Part of the Lockmaster range of replacement hardware
- Designed to suit dual spindle Lockmaster multipoint locks

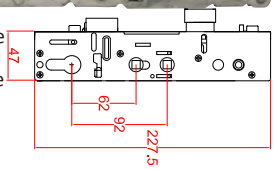

BACKSET	SPINDLE	CENTRES	PART CODE
45mm	Twin	92/62mm	PAD99945U

Sprung 35mm BS Lockcase LOCKMASTER®

- Part of the Lockmaster range of replacement hardware
- Designed to suit Lockmaster multipoint locks

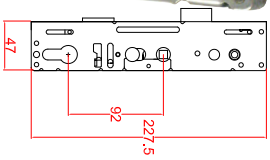

BACKSET	SPINDLE	CENTRES	PART CODE
35mm	Single	92mm	PAD99999S

Un-sprung 35mm BS Lockcase LOCKMASTER®

- Part of the Lockmaster range of replacement hardware
- Designed to suit dual spindle Lockmaster multipoint locks

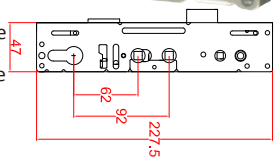

BACKSET	SPINDLE	CENTRES	PART CODE
35mm	Twin	92/62mm	PAD99999U

Doormaster™ Replacement 35mm BS Lockcase Yale G2000 style

- Part of the Yale Doormaster™ range of replacement hardware
- Lockcases designed to suit and replace Yale G2000 lock bodies

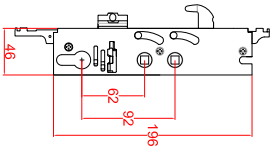

BACKSET	SPINDLE	CENTRES	PART CODE
35mm	Twin	92/62mm	YGB10003

Doormaster™ Replacement 35mm BS Lockcase Mila style

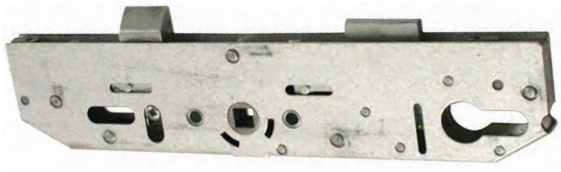

- Part of the Yale Doormaster™ range of replacement hardware
- Lockcases designed to suit and replace MILA lock bodies

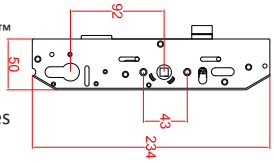

BACKSET	SPINDLE	CENTRES	PART CODE
35mm	Single	92mm	YGB10001

XL Double Spindle 35mm BS Lockcase

- This Fullex XL lockcase is available in a 35mm backset and is ideal for use in repairs

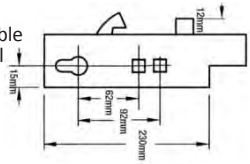

BACKSET	SPINDLE	CENTRES	PART CODE
35mm	Twin	92/62mm	FGB10002

XL Double Spindle 45mm BS Lockcase

- This Fullex XL lockcase is available in a 45mm backset and is ideal for use in repairs

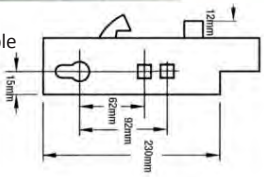

BACKSET	SPINDLE	CENTRES	PART CODE
45mm	Twin	92/62mm	FGB10003

Old Style 'A' Case Replacement 37mm BS Gearbox

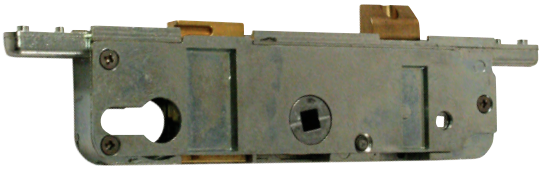

- Replacement gearbox for the Fullex range of locks
- 68mm centres
- 37mm backset gearbox

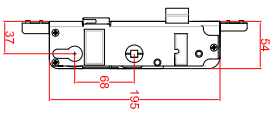

BACKSET	SPINDLE	CENTRES	PART CODE
37mm	Single	68mm	FGB10000

SL 16 Replacement 35mm BS Gearbox

- Replacement gearbox for the Fullex range of locks
- 68mm centres
- 35mm backset gearbox

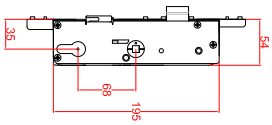

BACKSET	SPINDLE	CENTRES	PART CODE
35mm	Single	68mm	FGB10001

REPLACEMENT LOCKCASES

MACO GTS 35mm BS Lockcase

- Replacement 92mm centres lockcases to suit MACO GTS locks

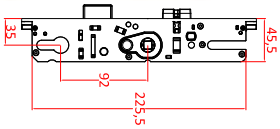

BACKSET	SPINDLE	CENTRES	PART CODE
35mm	Single	92mm	MGB10000

Fuhr Split Spindle 35mm BS Lockcase

- Replacement 92mm centres lockcases to suit Fuhr locks

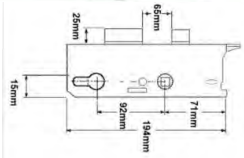

BACKSET	SPINDLE	CENTRES	PART CODE
35mm	Split (True)	92mm	FUH10000

ERA Split Spindle Nightlatched 35mm BS Lockcase

The Door Lock People

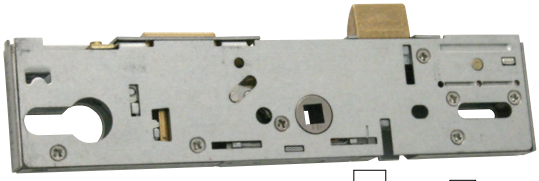

- Replacement 92mm centres lockcases to suit ERA locks

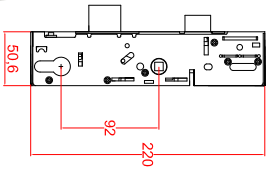

BACKSET	SPINDLE	CENTRES	PART CODE
35mm	Twin	92mm	ERA20035

ERA Split Spindle Nightlatched 45mm BS Lockcase

The Door Lock People

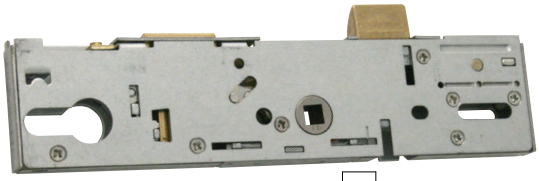

- Replacement 92mm centres lockcases to suit ERA locks

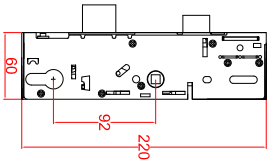

BACKSET	SPINDLE	CENTRES	PART CODE
45mm	Twin	92mm	ERA20045

GU Style Replacement 28mm BS Lockcase

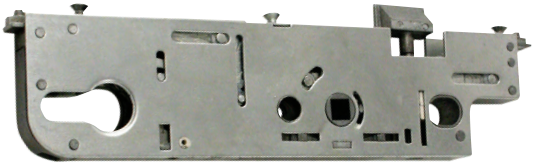

- Lockcases designed to suit and replace GU lock bodies

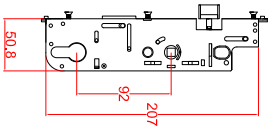

BACKSET	SPINDLE	CENTRES	PART CODE
28mm	Twin	92mm	YGB10000A

GU style Replacement 35mm BS Lockcase

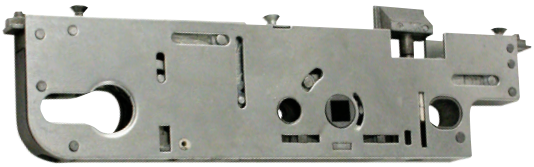

- Lockcases designed to suit and replace GU lock bodies

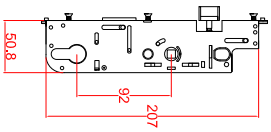

BACKSET	SPINDLE	CENTRES	PART CODE
35mm	Single	92mm	YGB10000

SBD Approved

10 YEAR GUARANTEE

Doormaster™ Lock Range Adjustable

- Yale Doormaster™ Adjustable is a high security lock designed to replace up to 90% of PVCu door locks with top and bottom hooks or bolts, a 35mm backset, and a 16mm faceplate
- Its adjustable design utilises the latest patented technology from Yale to ensure the adjustable lock is installer friendly, making it the ideal choice where a higher level of security on a PVCu door is required

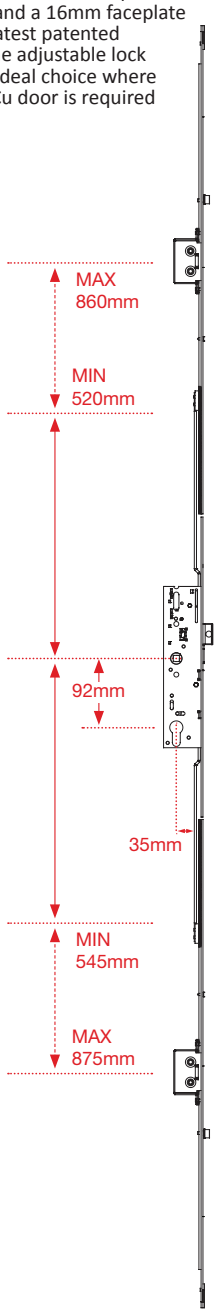

DESCRIPTION	CENTRE CASE	CENTRES	BACKSET	SPINDLE	HOOK	NO. OF KEEPS INCLUDED		PART CODE
						CENTRE	HOOK	
Adjustable PVCu 16mm Faceplate	Latch & Hookbolt	92mm	35mm	Split (True)	2	1	2	YAL10000

YALE DOORMASTER™ LOCK RANGE

Doormaster™ Lock Range Universal

10 YEAR GUARANTEE

- Yale Doormaster™ Universal is designed to replace any PVCu door lock with a 35mm backset and a 16mm faceplate
- Simple to fit, Doormaster™ Universal uses the latest patented technology from Yale to ensure security and simplicity of installation

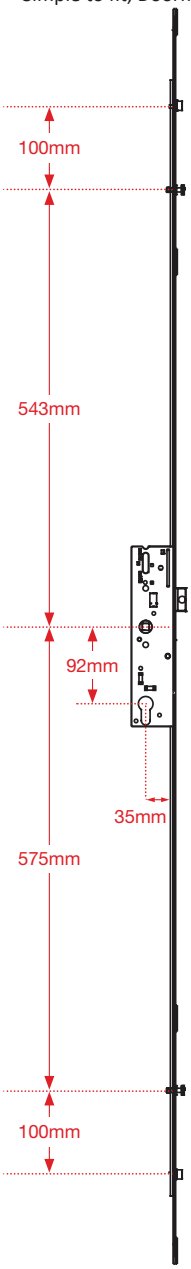

DESCRIPTION	CENTRE CASE	CENTRES	BACKSET	SPINDLE	ROLLER	MUSH	NO. OF KEEPS INCLUDED	PART CODE
Universal PVCu 16mm Faceplate	Latch & Hookbolt	92mm	35mm	Split (True)	2	2	1 x One Piece Keep	YAL10001
Universal PVCu 16mm Faceplate	Latch & Hookbolt	92mm	45mm	Split (True)	2	2	1 x One Piece Keep	YAL10003

SBD Approved

10 YEAR GUARANTEE

Doormaster™ Lock Range Professional

- Yale Doormaster™ Professional is a high security replacement lock with three hooks and two rollers
- Designed with the professional installer in mind, this lock includes 'crop & mate' technology to maximise the scope of installation
- Several patented features plus a choice of faceplate widths and backset sizes, makes the professional lock the ideal choice where a higher level of security is required
- Available for PVCu or composite doors (16mm or 20mm face plate versions available)
- Tested to Police Approved (Secured By Design) standard and PAS 24 door set capable
- Supplied with split spindles for night latch operation

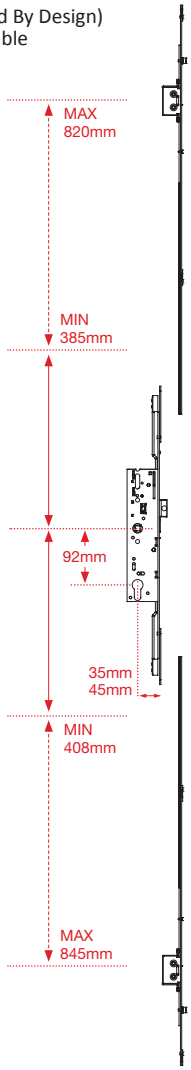

DESCRIPTION	CENTRE CASE	CENTRES	SPINDLE	ROLLER	HOOK	NO. OF KEEPS INCLUDED CENTRE	NO. OF KEEPS INCLUDED HOOK	35mm BACKSET PART CODE	45mm BACKSET PART CODE
Professional PVCu 16mm Faceplate	Latch & Hookbolt	92mm	Split (True)	2	2	1	2	YAL10002	YAL10004
Professional Composite 16mm Faceplate	Latch & Hookbolt	92mm	Split (True)	2	2	1	2	YAL10007	YAL10008
Professional Composite 20mm Faceplate	Latch & Hookbolt	92mm	Split (True)	2	2	1	2	-	YAL10005

Yale LOCKMASTER®

Lockmaster PL172 3 Hook, 4 Roller, Extendable

10 YEAR GUARANTEE MECHANICAL

BBA Approved

- 3 hook, 2 anti-lift pins, 4 roller, extendable
- Unsprung lockcase has twin followers to give both front door night latch operation and standard back door lever/lever action
- Opposing centre hook which engages when the lever is lifted
- High security 25mm throw hooks
- Silver triklad finish with 240 hours salt spray protection
- BBA assessment report: S2/42984
- 10 year manufacturer guarantee
- Corrosion resistant salt spray: 240 hours, BS EN 1670 Grade 4

HANDLES TO SUIT
HERO (page 237)
HOPPE Atlanta 240 (page 246)
TROJAN Sparta 240 (page 239, 241 & 243)
TROJAN DDA Long Lever (page 244)

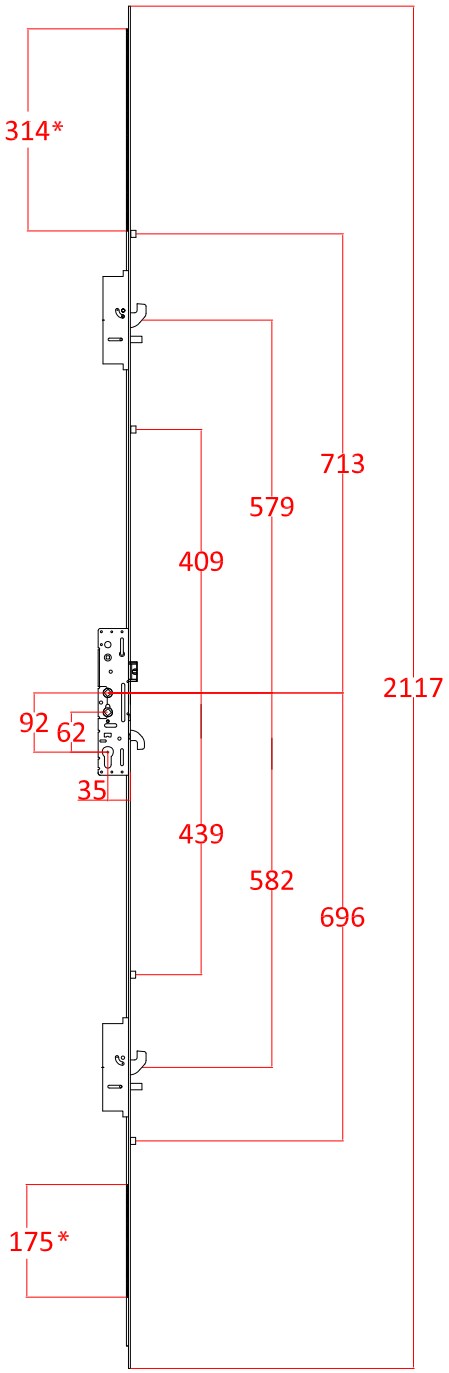

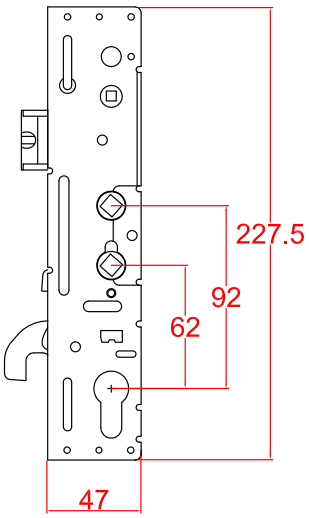

Un-sprung Hookbolt
35mm BS Lockcase

* Length of croppable teeth

DESCRIPTION	CENTRE CASE	CENTRES	BACKSET	SPINDLE	ROLLER	HOOK & ANTI LIFT PINS	NO. OF KEEPS REQUIRED CENTRE	HOOK	PART CODE
Lockmaster Night Latch Un-sprung Extendable	Latch & Hookbolt	92/62mm	35mm	Twin	4	2	1	2	PAD17200SS

KEEPS TO SUIT

Centre Latch & Hookbolt Keep

Left Hand	**Right Hand**	**Centre Latch Bucket**
PAD90124S	PAD90125S	PAD90004HK

2 Hook, 4 Roller Keep set

Left Hand	**Right Hand**
PAD90061S	PAD90062S

1 Piece Keep also available

Left Hand	**Right Hand**
PAD91011	PAD91012

For the correct packers please contact our sales office on 01234 242724.

For shootbolts please see the table below

SHOOTBOLT TYPE	OVERALL SHOOTBOLT LENGTH		SASH REBATE ON PAD17200SS		PART CODE
	TOP	BOTTOM	MIN	MAX	
Standard	200mm	200mm	1979mm	2452mm	PAD90011SS
Short High Security	150mm	132mm	1783mm	2334mm	PAD90088S

For PAS 24 solutions please contact our Technical Department on 01234 242738 or email technical@windowware.co.uk

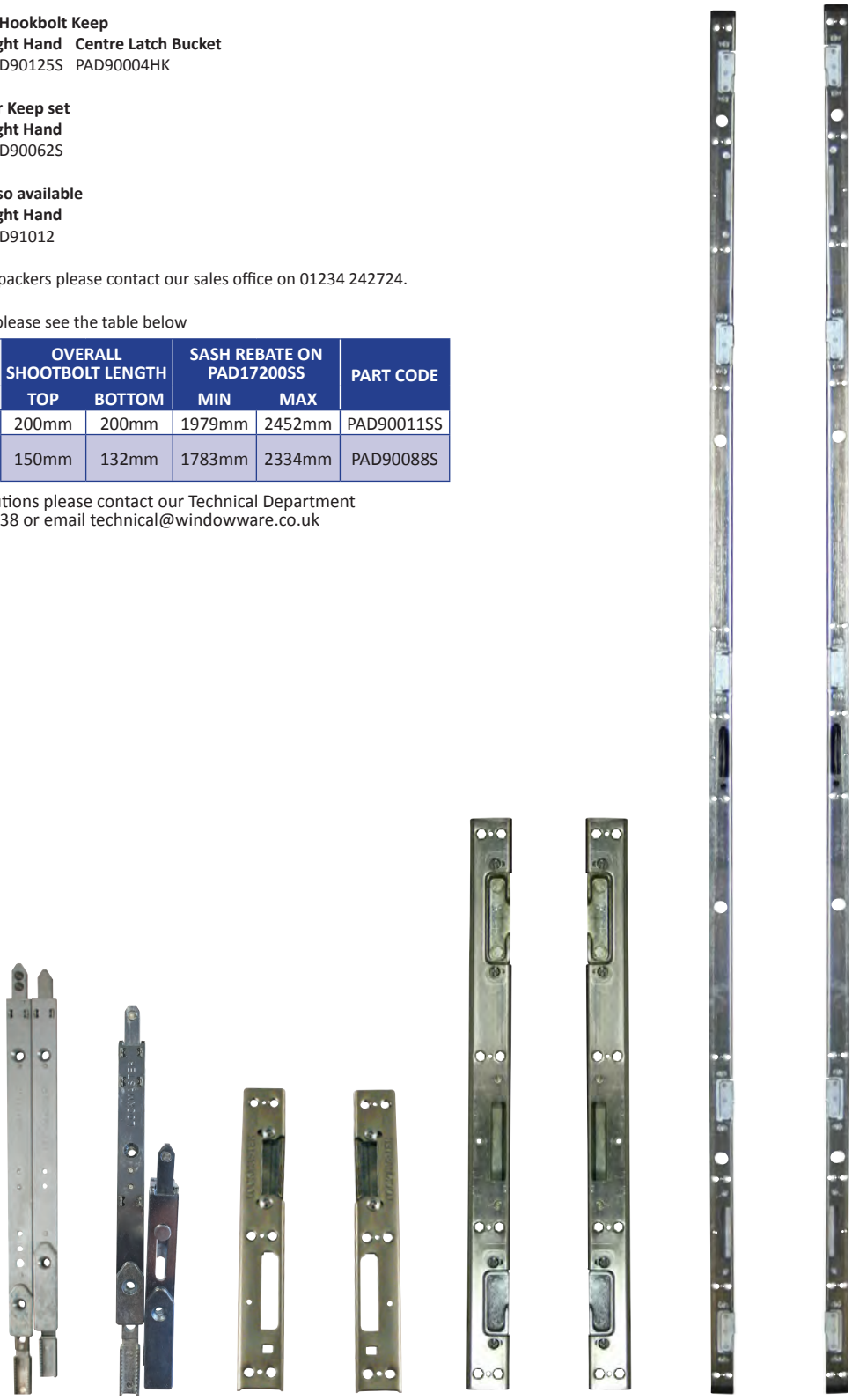

PAD90011SS PAD90088S PAD90124S PAD90125S PAD90061S PAD90062S PAD91011 PAD91012

Yale LOCKMASTER®

Lockmaster PL172 2 Hook, 4 Roller, Extendable

10 YEAR GUARANTEE MECHANICAL

BBA Approved

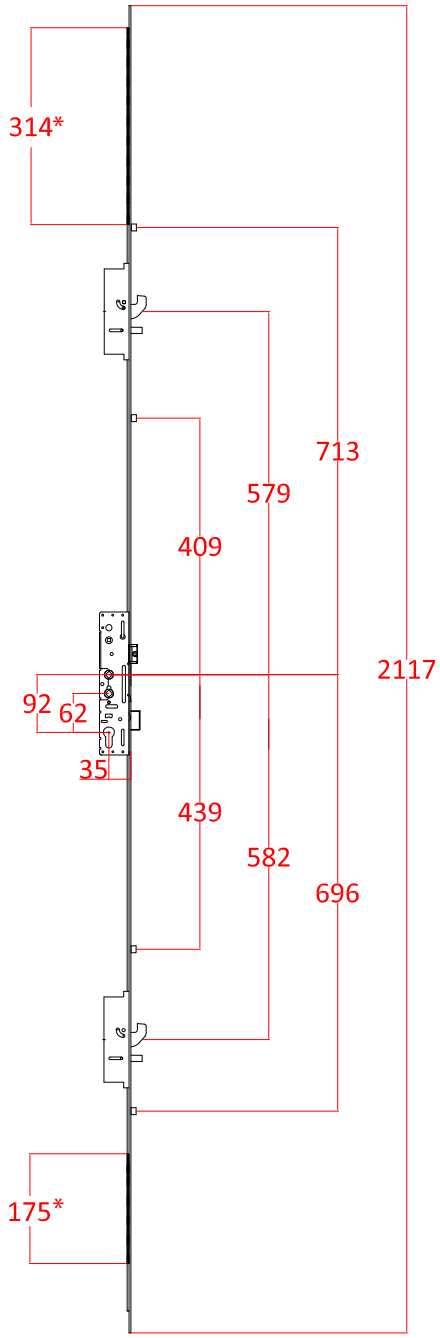

- Sprung lockcase with single follower to give lift-lever action for use with lever/lever furniture
- Un-sprung lockcase has twin followers to give both front door night latch operation and standard back door lever/lever action
- Pre-compression rollers unique to Lockmaster ensure a smooth action and positive door alignment
- Other features include: easily reversible latch, deadbolts with hardened pins, hook bolts with 25mm throw, anti-lift pins and mushroom cams
- Un-sprung lockcase also includes snib (latch hold-back facility)
- 35mm backset as standard
- BBA assessment report: S2/42984
- 10 year manufacturer guarantee
- Corrosion resistant salt spray: 240 hours, BS EN 1670 Grade 4

HANDLES TO SUIT
HERO (page 237)
HOPPE Atlanta 240 (page 246)
TROJAN Sparta 240 (page 239, 241 & 243)
TROJAN DDA Long Lever (page 244)

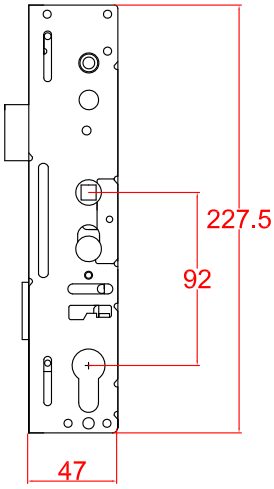

Sprung 35mm BS Lockcase

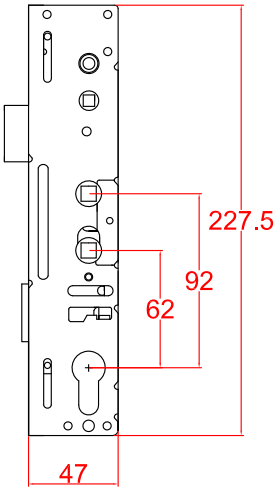

Un-sprung 35mm BS Lockcase

* Length of croppable teeth

DESCRIPTION	CENTRE CASE	CENTRES	BACKSET	SPINDLE	ROLLER	HOOK & ANTI LIFT PINS	NO. OF KEEPS REQUIRED CENTRE	NO. OF KEEPS REQUIRED HOOK	PART CODE
Lockmaster Lever/Lever Sprung Extendable	Latch & Deadbolt	92mm	35mm	Single	4	2	1	2	PAD17400SS
Lockmaster Lever/Lever Un-sprung Extendable	Latch & Deadbolt	92/62mm	35mm	Twin	4	2	1	2	PAD17401SS

KEEPS TO SUIT
Centre Latch & Deadbolt Keep

Left Hand	**Right Hand**
PAD90021AK	PAD90022AK

Centre Latch Bucket

Full Depth	**Shallow Depth**
PAD90004	PAD90004P

2 Hook, 4 Roller Keep set

Left Hand	**Right Hand**
PAD90061S	PAD90062S

1 Piece Keep also available

Left Hand	**Right Hand**
PAD91011	PAD91012

For the correct packers please contact our sales office on 01234 242724.

For shootbolts please see the table below

SHOOTBOLT TYPE	OVERALL SHOOTBOLT LENGTH		SASH REBATE ON PAD17400SS		PART CODE
	TOP	BOTTOM	MIN	MAX	
Standard	200mm	200mm	1979mm	2452mm	PAD90011SS
Short High Security	150mm	132mm	1783mm	2334mm	PAD90088S

For PAS 24 solutions please contact our Technical Department on 01234 242738 or email technical@windowware.co.uk

PAD90011SS

PAD90088S

PAD90021AK

PAD90022AK

PAD90061S

PAD90062S

PAD91011

PAD91012

YALE LEVER OPERATED MULTIPOINT DOOR LOCKS

Yale LOCKMASTER®

Lockmaster PL143HK 3 Hook, 4 Roller, Extendable

10 YEAR GUARANTEE MECHANICAL

BBA Approved

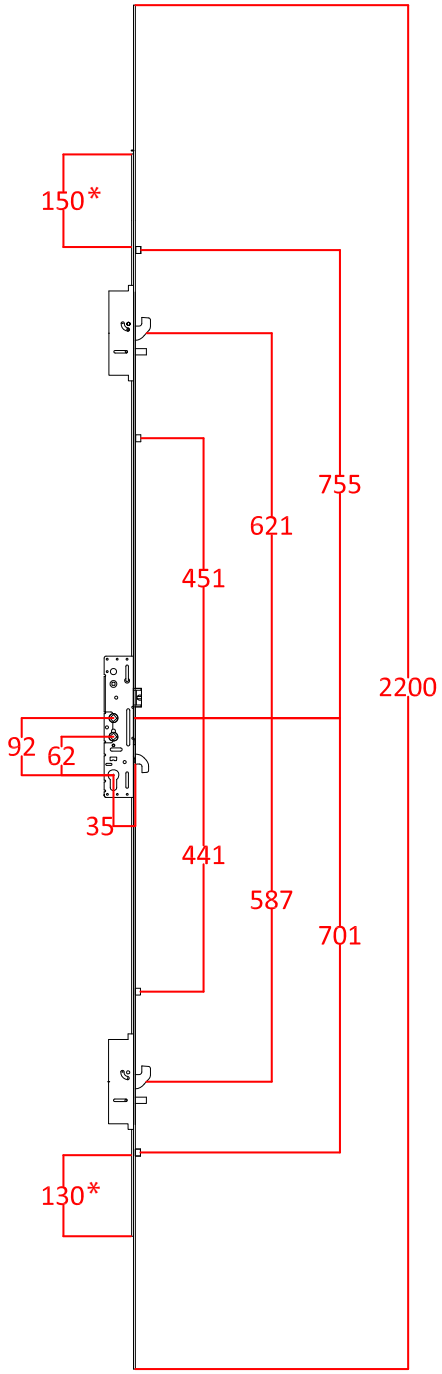

- Un-sprung lockcase has twin followers to give both front door night latch operation and standard back door lever/lever action
- Pre-compression rollers unique to Lockmaster ensure a smooth action and positive door alignment
- Other features include snib (latch hold-back) facility, easily reversible latch, deadbolts with hardened pins, hook bolts with 25mm throw and anti-lift pins
- 35mm backset as standard
- BBA assessment report: S2/42984
- 10 year manufacturer guarantee
- Corrosion Resistant Salt Spray: 240 hours, BS EN 1670 Grade 4

HANDLES TO SUIT
HERO (page 237)
HOPPE Atlanta 240 (page 246)
TROJAN Sparta 240 (page 239, 241 & 243)
TROJAN DDA Long Lever (page 244)

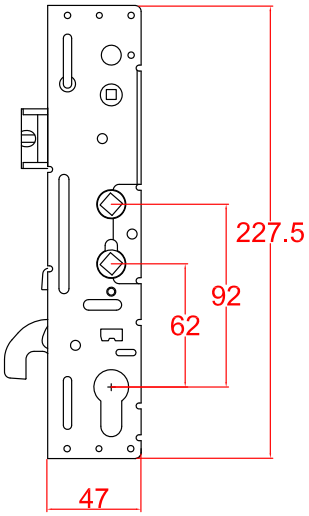

Un-sprung Hookbolt
35mm BS Lockcase

* Length of croppable teeth

DESCRIPTION	CENTRE CASE	CENTRES	BACKSET	SPINDLE	ROLLER	HOOK & ANTI LIFT PINS	NO. OF KEEPS REQUIRED CENTRE	HOOK	PART CODE
Lockmaster Night Latch Un-sprung Extendable	Latch & Hookbolt	92/62mm	35mm	Twin	4	2	1	2	PAD14301SS

KEEPS TO SUIT
Centre Latch & Hookbolt Keep

Left Hand	**Right Hand**	**Centre Latch Bucket**
PAD90124S	PAD90125S	PAD90004HK

2 Hook, 4 Roller Keep set

Left Hand	**Right Hand**
PAD90061S	PAD90062S

1 Piece Keep also available

Left Hand	**Right Hand**
PAD91011	PAD91012

For the correct packers please contact our sales office on 01234 242724.

For shootbolts please see the table below

SHOOTBOLT TYPE	OVERALL SHOOTBOLT LENGTH		SASH REBATE ON PAD14301SS		PART CODE
	TOP	BOTTOM	MIN	MAX	
Standard	200mm	200mm	1979mm	2452mm	PAD90011SS
Short High Security	150mm	132mm	1783mm	2334mm	PAD90088S

For PAS 24 solutions please contact our Technical Department on 01234 242738 or email technical@windowware.co.uk

PAD90011SS

PAD90088S

PAD90124S

PAD90125S

PAD90061S

PAD90062S

PAD91031

PAD91032

Yale LOCKMASTER®

Lockmaster PLSP143 2 Hook, 4 Roller, Extendable

10 YEAR GUARANTEE MECHANICAL

BBA Approved

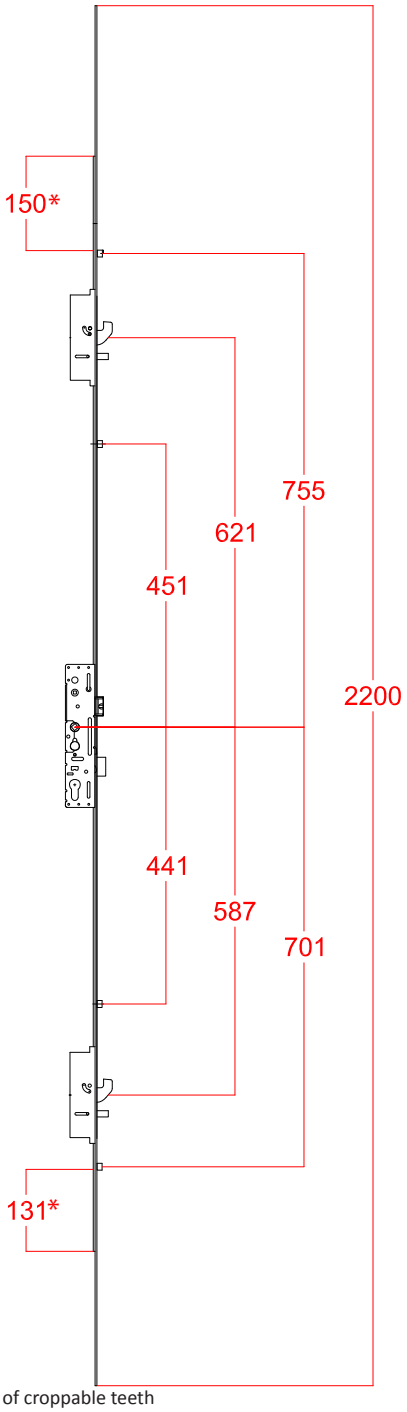

- Sprung lockcase with single follower to give lift lever action for use with lever/lever furniture
- Pre-compression rollers unique to Lockmaster ensure a smooth action and positive door alignment
- Other features include: easily reversible latch, deadbolts with hardened pins, hook bolts with 25mm throw, anti-lift pins and mushroom cams
- 35mm backset as standard
- BBA assessment report: S2/42984
- 10 year manufacturer guarantee
- Corrosion resistant salt spray: 240 hours, BS EN 1670 Grade 4

HANDLES TO SUIT
HERO (page 237)
HOPPE Atlanta 240 (page 246)
TROJAN Sparta 240 (page 239, 241 & 243)
TROJAN DDA Long Lever (page 244)

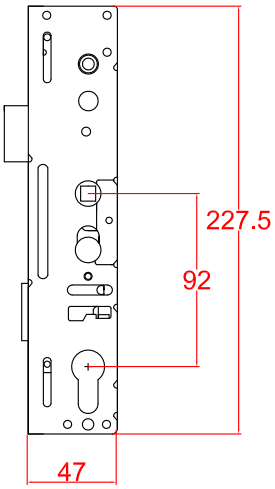

Sprung 35mm BS Lockcase

* Length of croppable teeth

DESCRIPTION	CENTRE CASE	CENTRES	BACKSET	SPINDLE	ROLLER	HOOK & ANTI LIFT PINS	NO. OF KEEPS REQUIRED CENTRE	HOOK	PART CODE
Lockmaster Lever/Lever Sprung Extendable	Latch & Deadbolt	92mm	35mm	Single	4	2	1	2	PAD14400SS

KEEPS TO SUIT
Centre Latch & Deadbolt Keep

Left Hand	**Right Hand**
PAD90021AK	PAD90022AK

Centre Latch Bucket

Full Depth	**Shallow Depth**
PAD90004	PAD90004P

2 Hook, 4 Roller Keep set

Left Hand	**Right Hand**
PAD90061S	PAD90062S

1 Piece Keep also available

Left Hand	**Right Hand**
PAD91031	PAD91032

For the correct packers please contact our sales office on 01234 242724.

For shootbolts please see the table below

SHOOTBOLT TYPE	OVERALL SHOOTBOLT LENGTH		SASH REBATE ON PAD14400SS		PART CODE
	TOP	BOTTOM	MIN	MAX	
Standard	200mm	200mm	1975mm	2099mm	PAD90011SS
Short High Security	150mm	132mm	1857mm	1981mm	PAD90088S

For PAS 24 solutions please contact our Technical Department on 01234 242738 or email technical@windowware.co.uk

PAD90011SS

PAD90088S

PAD90021AK

PAD90022AK

PAD90061S

PAD90062S

PAD91031

PAD91032

Yale LOCKMASTER®

Lockmaster PLSP132ER
2 Hook, 4 Roller

10 YEAR GUARANTEE MECHANICAL

BBA Approved

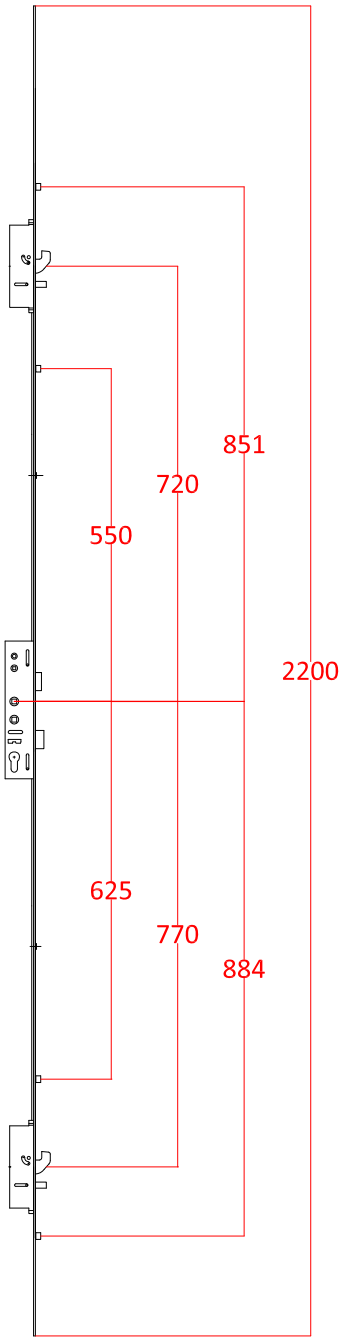

- Un-sprung lockcase has twin followers to give both front door night latch operation and standard back door lever/lever action
- Pre-compression rollers unique to Lockmaster ensure a smooth action and positive door alignment
- Other features include snib (latch hold-back) facility, easily reversible latch, deadbolts with hardened pins, hook bolts with 25mm throw and anti-lift pins
- 35mm backset as standard
- BBA assessment report: S2/42984
- 10 year manufacturer guarantee
- Corrosion resistant salt spray: 240 hours, BS EN 1670 Grade 4

HANDLES TO SUIT
HERO (page 237)
HOPPE Atlanta 240 (page 246)
TROJAN Sparta 240 (page 239, 241 & 243)
TROJAN DDA Long Lever (page 244)

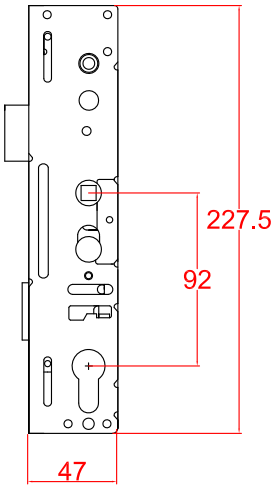

Sprung 35mm BS Lockcase

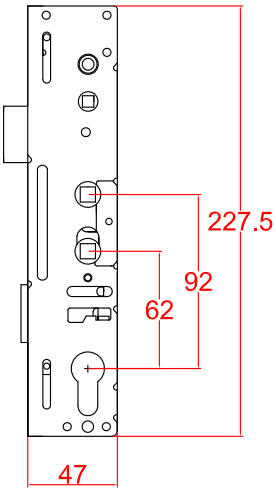

Un-sprung 35mm BS Lockcase

DESCRIPTION	CENTRE CASE	CENTRES	BACKSET	SPINDLE	ROLLER	HOOK & ANTI LIFT PINS	NO. OF KEEPS REQUIRED CENTRE	NO. OF KEEPS REQUIRED HOOK	PART CODE
Lockmaster Night Latch Sprung	Latch & Deadbolt	92mm	35mm	Single	4	2	1	2	PAD13120SSP
Lockmaster Night Latch Un-sprung	Latch & Deadbolt	92/62mm	35mm	Twin	4	2	1	2	PAD13121SS

KEEPS TO SUIT

Centre Latch & Deadbolt Keep

Left Hand	**Right Hand**
PAD90021AK	PAD90022AK

Centre Latch Bucket

Full Depth	**Shallow Depth**
PAD90004	PAD90004P

2 Hook, 4 Roller Keep set

Left Hand	**Right Hand**
PAD90061S	PAD90062S

1 Piece Keep also available

Left Hand	**Right Hand**
PAD91041	PAD91042

For the correct packers please contact our sales office on 01234 242724.

For PAS 24 solutions please contact our Technical Department on 01234 242738 or email technical@windowware.co.uk

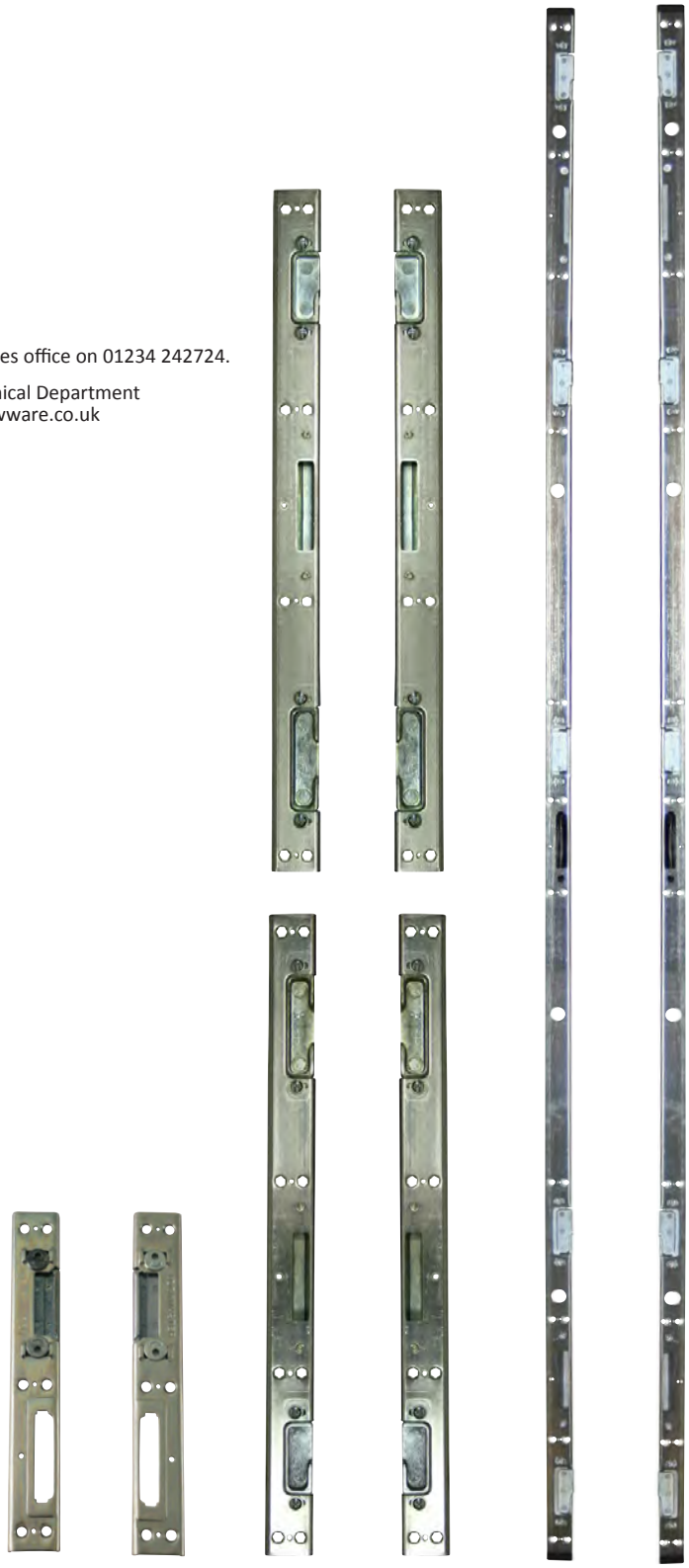

PAD90021AK PAD90022AK PAD90061S PAD90062S PAD91041 PAD91042

Yale LOCKMASTER®

Lockmaster PLSP45 2 Hook, 2 Roller, Extendable

10 YEAR GUARANTEE MECHANICAL

BBA Approved

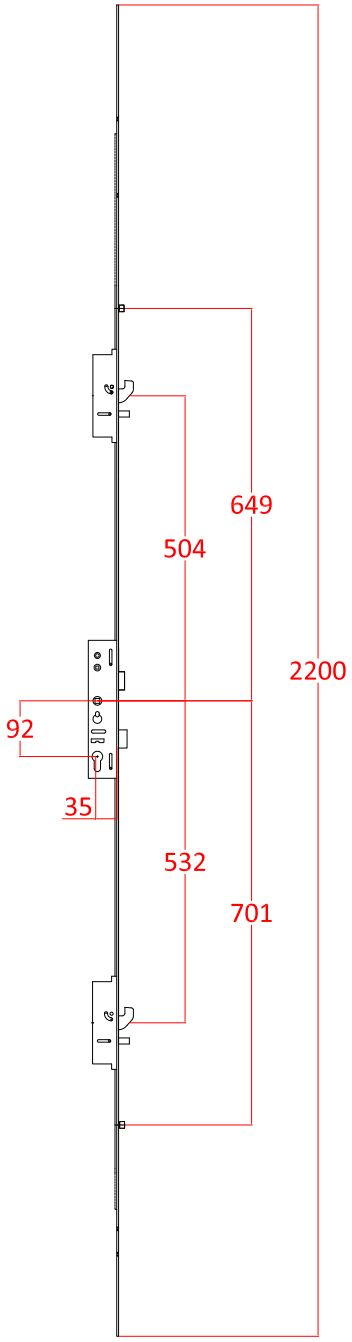

- Sprung lockcase with single follower to give lift-lever action for use with lever/lever furniture
- Un-sprung lockcase has twin followers to give both front door night latch operation and standard back door lever/lever action
- Pre-compression rollers unique to Lockmaster ensure a smooth action and positive door alignment
- Other features include: easily reversible latch, deadbolts with hardened pins, hook bolts with 25mm throw, anti-lift pins and mushroom cams
- Un-sprung lockcase also includes snib (latch hold-back facility)
- 35mm backset as standard
- BBA assessment report: S2/42984
- 10 year manufacturer guarantee
- Corrosion resistant salt spray: 240 hours, BS EN 1670 Grade 4

HANDLES TO SUIT
HERO (page 237)
HOPPE Atlanta 240 (page 246)
TROJAN Sparta 240 (page 239, 241 & 243)
TROJAN DDA Long Lever (page 244)

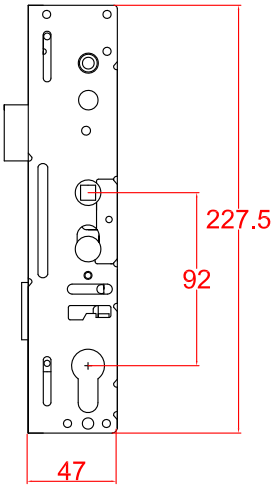

Sprung 35mm BS Lockcase

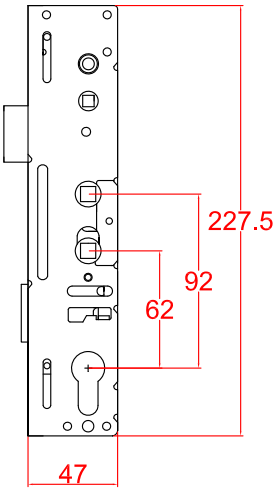

Un-sprung 35mm BS Lockcase

DESCRIPTION	CENTRE CASE	CENTRES	BACKSET	SPINDLE	ROLLER	HOOK & ANTI LIFT PINS	NO. OF KEEPS REQUIRED CENTRE	NO. OF KEEPS REQUIRED HOOK	PART CODE
Lockmaster Lever/Lever Sprung Extendable	Latch & Hookbolt	92mm	35mm	Single	2	2	1	2	YLM45100
Lockmaster Lever/Lever Un-sprung Extendable	Latch & Hookbolt	92/62mm	35mm	Twin	2	2	1	2	YLM45101

KEEPS TO SUIT
Centre Latch & Deadbolt Keep

Left Hand	**Right Hand**
PAD90021AK	PAD90022AK

Centre Latch Bucket

Full Depth	**Shallow Depth**
PAD90004	PAD90004P

Hook & Roller Keep
PAD90023AK

1 Piece Keep also available

Left Hand	**Right Hand**
PAD91021	PAD91022

For the correct packers please contact our sales office on 01234 242724.

For shootbolts please see the table below

SHOOTBOLT TYPE	OVERALL SHOOTBOLT LENGTH		SASH REBATE ON YLM45100		PART CODE
	TOP	BOTTOM	MIN	MAX	
Standard	200mm	200mm	1866mm	2132mm	PAD90011SS
Short High Security	150mm	132mm	1748mm	2014mm	PAD90088S

For PAS 24 solutions please contact our Technical Department on 01234 242738 or email technical@windowware.co.uk

PAD90011SS

PAD90088S

PAD90021AK

PAD90022AK

PAD90023AK

PAD91021

PAD91022

YALE LEVER OPERATED MULTIPOINT DOOR LOCKS

Yale LOCKMASTER®

Lockmaster PL45-2ER-19 2 Hook, 4 Roller, Extendable

10 YEAR GUARANTEE MECHANICAL

BBA Approved

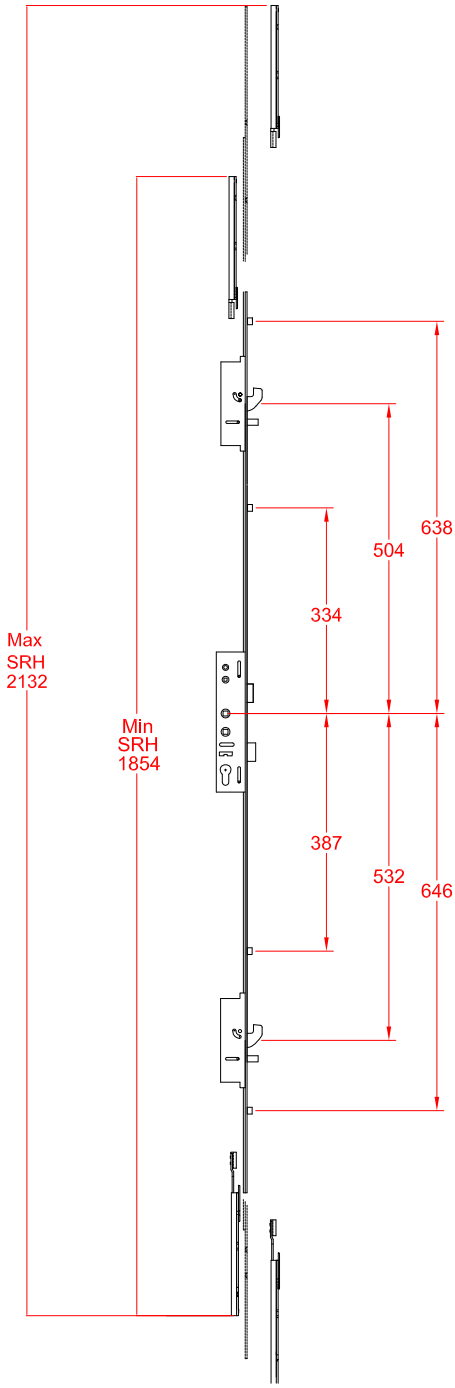

- Un-sprung lockcase has twin followers to give both front door night latch operation and standard back door lever/lever action
- Pre-compression rollers unique to Lockmaster ensure a smooth action and positive door alignment
- Other features include snib (latch hold-back) facility, easily reversible latch, deadbolts with hardened pins, hook bolts with 25mm throw and anti-lift pins
- 35mm backset as standard
- BBA assessment report: S2/42984
- 10 year manufacturer guarantee
- Corrosion resistant salt spray: 240 hours, BS EN 1670 Grade 4

HANDLES TO SUIT
HERO (page 237)
HOPPE Atlanta 240 (page 246)
TROJAN Sparta 240 (page 239, 241 & 243)
TROJAN DDA Long Lever (page 244)

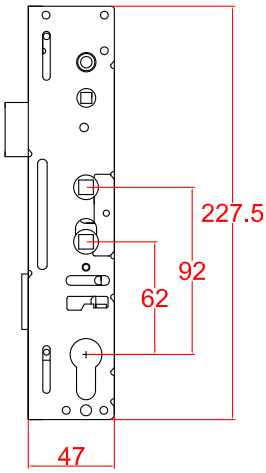

Un-sprung 35mm BS Lockcase

DESCRIPTION	CENTRE CASE	CENTRES	BACKSET	SPINDLE	ROLLER	HOOK & ANTI LIFT PINS	NO. OF KEEPS REQUIRED CENTRE	HOOK	PART CODE
Lockmaster Night Latch Un-sprung Extendable	Latch & Deadbolt	92/62mm	35mm	Twin	4	2	1	2	PAD45121S

KEEPS TO SUIT
Centre Latch & Deadbolt Keep

Left Hand	**Right Hand**
PAD90021AK	PAD90022AK

Centre Latch Bucket

Full Depth	**Shallow Depth**
PAD90004	PAD90004P

2 Hook, 4 Roller Keep set

Left Hand	**Right Hand**
PAD90061S	PAD90062S

For the correct packers please contact our sales office on 01234 242724.

For shootbolts please see the table below

SHOOTBOLT TYPE	OVERALL SHOOTBOLT LENGTH		SASH REBATE ON PAD45121S		PART CODE
	TOP	BOTTOM	MIN	MAX	
Standard	200mm	200mm	1866mm	2132mm	PAD90011SS
Short High Security	150mm	132mm	1748mm	2014mm	PAD90088S

PAD90011SS

PAD90088S

PAD90021AK

PAD90022AK

PAD90061S

PAD90062S

YALE LEVER OPERATED MULTIPOINT DOOR LOCKS

Yale LOCKMASTER®

Lockmaster PLSP30 Slave Lock

10 YEAR GUARANTEE MECHANICAL

BBA Approved

- Specifically designed range of extendable, lever/lever sprung door locks for use on french doors
- Pre-compression rollers unique to Lockmaster ensure a smooth action and positive door alignment
- Other features include: easily reversible latch, deadbolts with hardened pins, hook bolts with 25mm throw and anti-lift pins
- 35mm backset
- BBA assessment report: S2/42984
- 10 year manufacturer guarantee
- Corrosion resistant salt spray: 240 hours, BS EN 1670 Grade 4

HANDLES TO SUIT
HERO (page 237)
HOPPE Atlanta 240 (page 246)
TROJAN Sparta 240 (page 239, 241 & 243)
TROJAN DDA Long Lever (page 244)

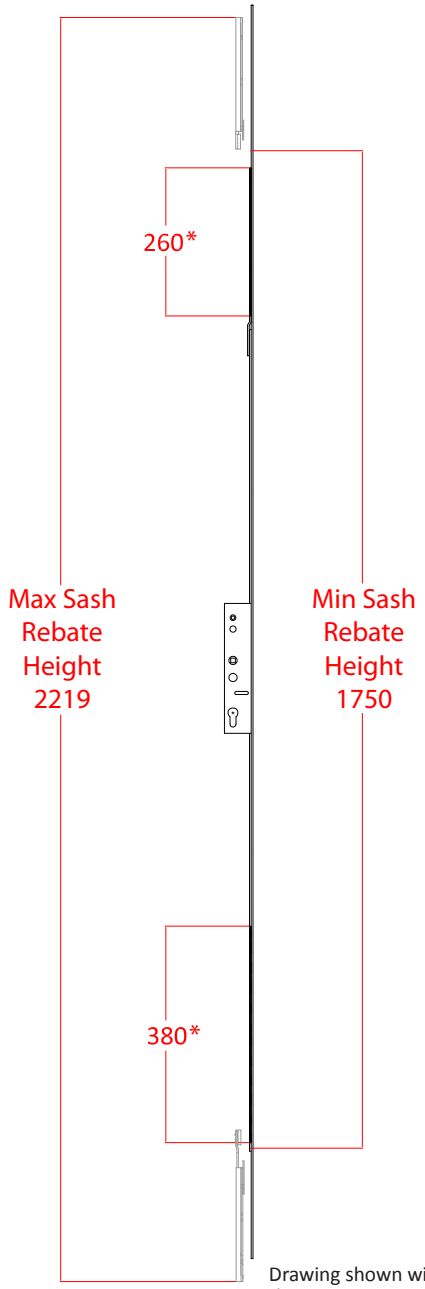

Drawing shown with the PAD90011SS Shootbolt

* Length of croppable teeth

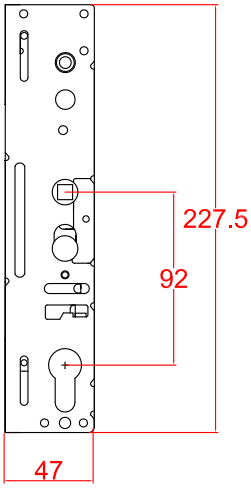

Sprung 35mm BS Lockcase

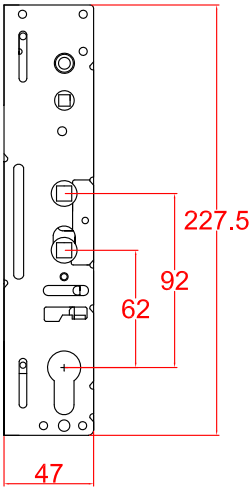

Un-sprung 35mm BS Lockcase

DESCRIPTION	CENTRE CASE	CENTRES	BACKSET	SPINDLE	PART CODE
Lockmaster Slave Sprung	No Locking Points	92mm	35mm	Single	PAD30100SS
Lockmaster Slave Un-sprung	No Locking Points	92/62mm	35mm	Twin	PAD30101SS
Lockmaster Slave Sprung inc. PAD90088S Shootbolt Set	No Locking Points	92mm	35mm	Single	PAD30200SS
Lockmaster Slave Un-sprung inc. PAD90088S Shootbolt Set	No Locking Points	92/62mm	35mm	Twin	PAD30201SS

KEEPS TO SUIT
Not required

SHOOTBOLTS TO SUIT
PAD90011SS

For shootbolts please see the table below

SHOOTBOLT TYPE	OVERALL SHOOTBOLT LENGTH		SASH REBATE ON PAD30100SS		PART CODE
	TOP	BOTTOM	MIN	MAX	
Standard	200mm	200mm	1866mm	2132mm	PAD90011SS
Short High Security	150mm	132mm	1748mm	2014mm	PAD90088S

For PAS 24 solutions please contact our Technical Department on 01234 242738 or email technical@windowware.co.uk

PAD90011SS

PAD90088S

LOCKMASTER SHOOTBOLT KEEPS

Yale LOCKMASTER®

Single and French Door Keeps

Single Door Keeps

PART CODE	BOX QTY.
PAD90051S	50

PART CODE	BOX QTY.
PAD90053S	50

PART CODE	BOX QTY.
PAD90015SS	100

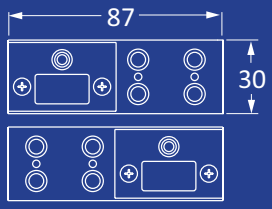

PAD90051S or PAD90053S
(Supplied In Pairs)
Requires 2 Profile Packers Per Keep

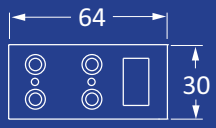

PAD90015SS
(Supplied In Singles)
Requires 2 Profile Packers

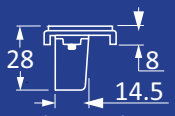

Bucket Detail

French Door Keeps

PART CODE	BOX QTY.
PAD90006SS	100

PART CODE	BOX QTY.
PAD90054S	50

PART CODE	BOX QTY.
PAD90005SS	200

PART CODE	BOX QTY.
PAD90052S	50

PART CODE	BOX QTY.
PAD90026SS	100

PART CODE	BOX QTY.
PAD90005SS	200

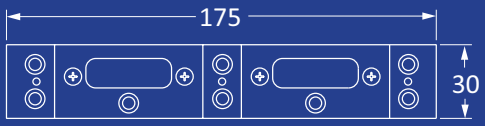

PAD90006SS or PAD90054S
(Supplied In Singles)
Requires 3 Profile Packers Per Keep

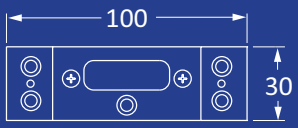

PAD90005SS or PAD90052S
(Supplied In Singles)
Requires 2 Profile Packers Per Keep

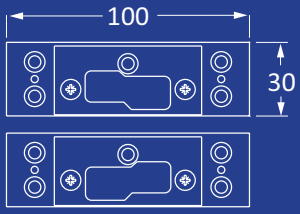

PAD90026SS or PAD90055
(Supplied In Pairs)
Requires 2 Profile Packers Per Keep

4 Roller, Latch, 70mm PZ with 16mm Faceplate

- 35mm backset door lock with 70mm centres
- Easily reversible die-cast zamak latch
- Adjustable compression roller cams

NB: 70mm centre locks require 70mm centre handles
The faceplate of the 35mm backset lock will be stamped Ferco 6.35 and the 28mm will be stamped 5.28

HANDLES TO SUIT
HOPPE London 205 (page 249)
Kore 7-PZ Handles (page 250)

KEEPS TO SUIT
Centre Latch Only Keep
FER80710S

Single Replacement Roller/Mushroom Keep
FER11637S

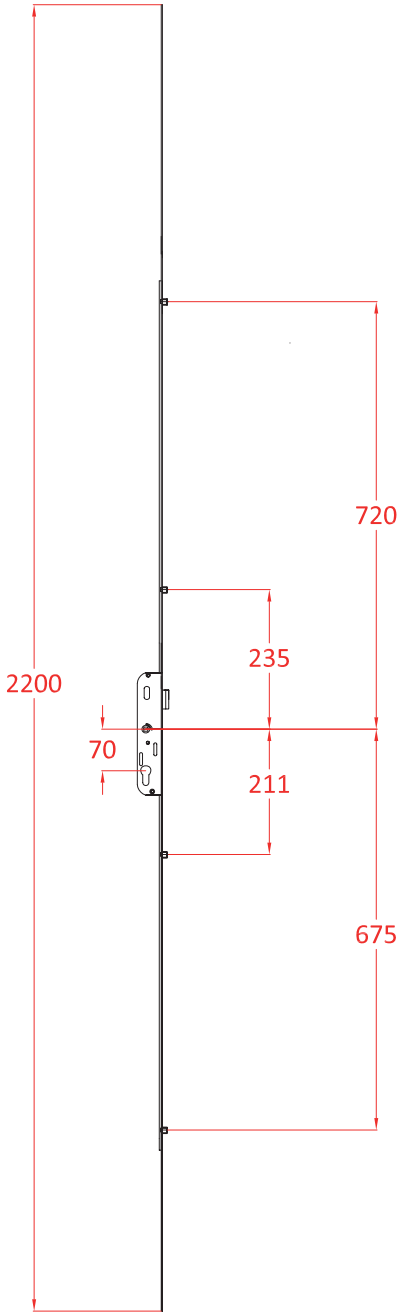

FER80710S FER11637S

DESCRIPTION	CENTRE CASE	CENTRES	BACKSET	SPINDLE	ROLLER	NO. OF KEEPS REQUIRED		PART CODE
						CENTRE	ROLLER	
70mm Centres Lever/Lever Sprung 16mm Faceplate	Latch Only	70mm	28mm	Single	4	1	4	FER28000S
70mm Centres Lever/Lever Sprung 16mm Faceplate	Latch Only	70mm	35mm	Single	4	1	4	FER350005

Tripact 2 Small Hook, 70mm PZ with 20mm Faceplate

Ideal Repair Lock

- 70mm centre door lock with 2 small hooks
- Available with a 40 or 50mm backset
- Designed for timber applications
- 20mm wide faceplate

HANDLES TO SUIT
HOPPE London 205 (page 249)
Kore 7-PZ Handles (page 250)

KEEPS TO SUIT
Centre Keep
FER13338S

Hook Keep
FER11413S

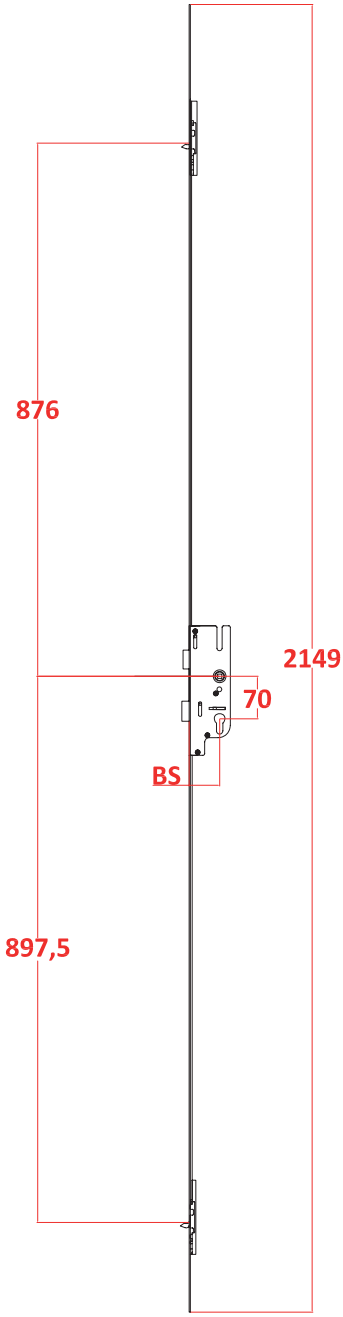

FER13338S FER11413S

DESCRIPTION	CENTRE CASE	CENTRES	BACKSET	SPINDLE	HOOK	NO. OF KEEPS REQUIRED		PART CODE
						CENTRE	HOOK	
Tripact F40 Lever/Lever 20mm Faceplate with Radiused Ends	Latch & Deadbolt	70mm	40mm	Single	2	1	2	FER21138
Tripact F50 Lever/Lever 20mm Faceplate with Radiused Ends	Latch & Deadbolt	70mm	50mm	Single	2	1	2	FER11997

Europa 2 Roller with 16mm Faceplate

- Adjustable roller cams
- Easily reversible die-cast zamak latch
- Shootbolt extensions can be fitted on this product
- Standard lever/lever only, allowing entry from both sides of the door. To lock the door throw the handle upwards to engage locking points and then deadlock with the key

HANDLES TO SUIT
HOPPE Atlanta 220 (page 245)
TROJAN Sparta 212 (page 238, 240 & 242)

KEEPS TO SUIT
Centre Latch & Deadbolt Keep

Left Hand	**Right Hand**
GUL30014LS	GUL30014RS

Single Replacement Roller/Mushroom Keep
FER11637S

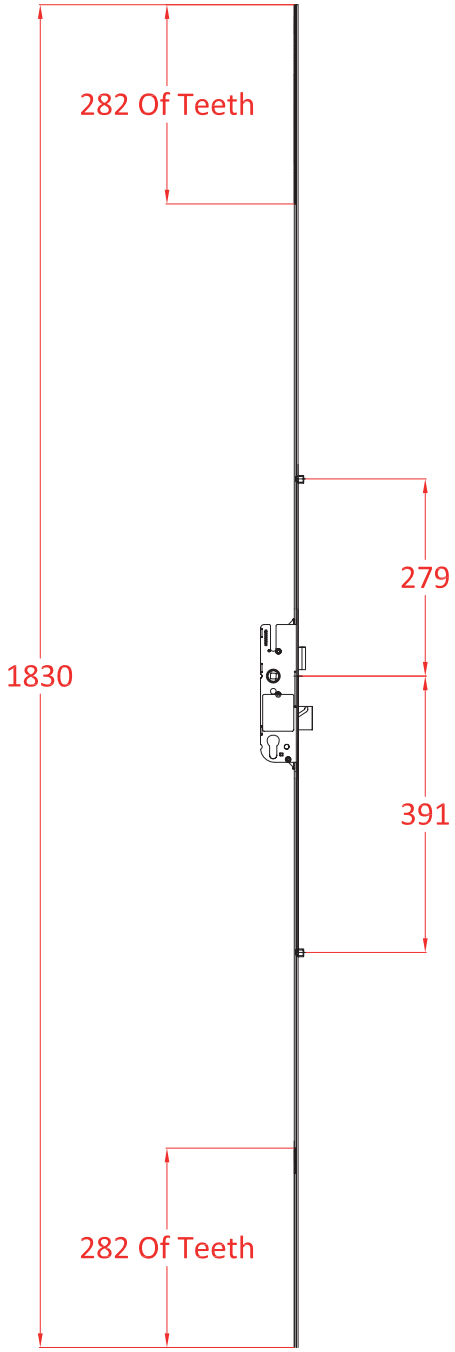

GUL30014LS

GUL30014RS

FER11637S

DESCRIPTION	CENTRE CASE	CENTRES	BACKSET	SPINDLE	ROLLER	NO. OF KEEPS REQUIRED		PART CODE
						CENTRE	ROLLER	
G4 French 1 Deadbolt 2 Roller Lever/Lever Sprung 16mm Faceplate	Latch & Deadbolt	92mm	35mm	Single	2	1	2	FER32686

Europa 2 Roller, Fixed Bottom Shootbolt with 16mm Faceplate

Ideal Repair Lock

- Adjustable roller cams
- Easily reversible die-cast zamak latch
- Shootbolt extensions can be fitted on this product
- Standard lever/lever only, allowing entry from both sides of the door. To lock the door throw the handle upwards to engage locking points and then deadlock with the key

HANDLES TO SUIT
HOPPE Atlanta 220 (page 245)
TROJAN Sparta 212 (page 238, 240 & 242)

KEEPS TO SUIT
Centre Latch & Deadbolt Keep

Left Hand	**Right Hand**
GUL30014LS	GUL30014RS

Single Replacement Roller/Mushroom Keep
FER11637S

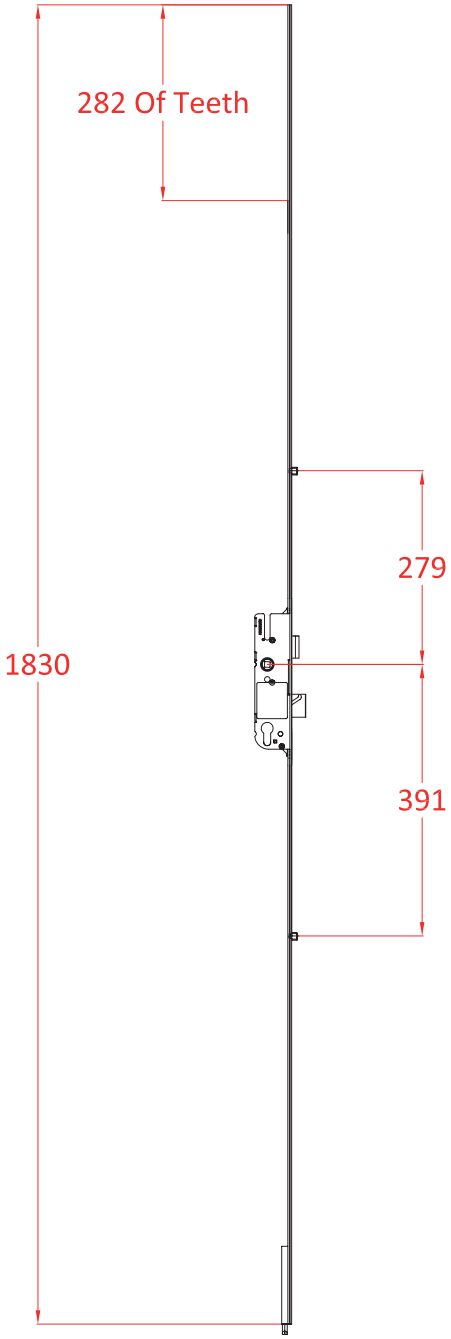

GUL30014LS GUL30014RS FER11637S

DESCRIPTION	CENTRE CASE	CENTRES	BACKSET	SPINDLE	ROLLER	NO. OF KEEPS REQUIRED		PART CODE
						CENTRE	ROLLER	
G4 French 1 Deadbolt 2 Roller Fixed Bottom Shootbolt Lever/Lever Sprung 16mm Faceplate	Latch & Deadbolt	92mm	35mm	Single	2	1	2	FER32688

Ideal Repair Lock

Europa 4 Roller with 16mm Faceplate

- Available in 28mm and 35mm backsets with 92mm centres
- Available in a choice of actions - standard lever/lever and night latch
- Easily reversible die-cast zamak latch
- Adjustable compressions roller cams
- Option to have Shootbolt Extensions fitted
- Lever/lever - allows entry from both sides of the door. To lock the door throw the handle upwards to engage locking points and then deadlock with the key
- Split spindle (night latch) - only allows entry from the outside when key is inserted. The locks latch will not retract when external handle is used - all other locking points will move but you will need to use your key to retract the latch to gain entry. To lock the door throw the handle upwards to engage locking points and then deadlock with the key

HANDLES TO SUIT
HOPPE Atlanta 220 (page 245)
TROJAN Sparta 212 (page 238, 240 & 242)

KEEPS TO SUIT
Centre Latch & Deadbolt Keep

Left Hand	**Right Hand**
GUL30014LS	GUL30014RS

Single Replacement Roller/Mushroom Keep
FER11637S

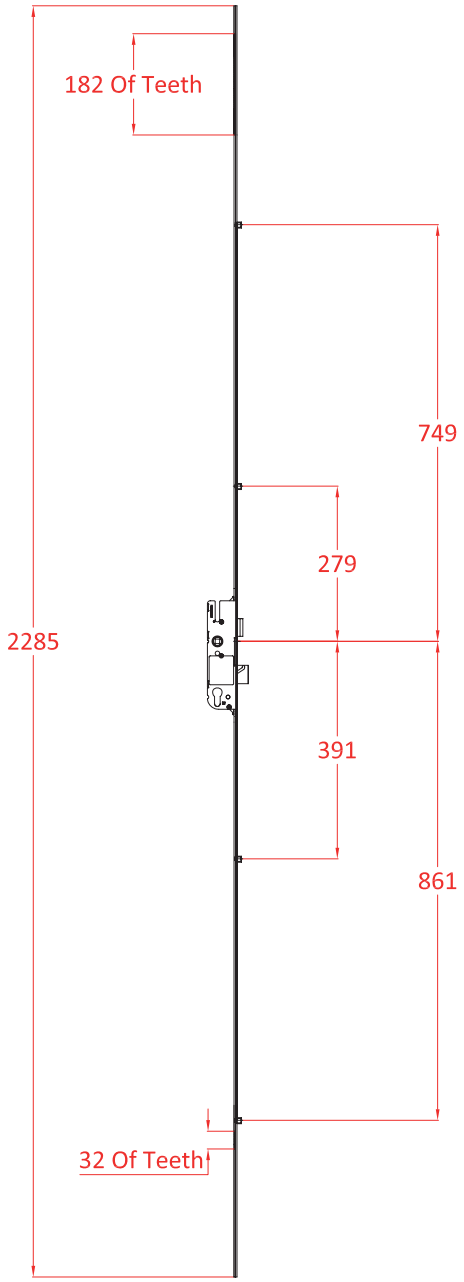

GUL30014LS

GUL30014RS

FER11637S

DESCRIPTION	CENTRE CASE	CENTRES	BACKSET	SPINDLE	ROLLER	NO. OF KEEPS REQUIRED		PART CODE
						CENTRE	ROLLER	
G4 1 Deadbolt 4 Roller Lever/Lever Sprung 16mm Faceplate	Latch & Deadbolt	92mm	28mm	Single	4	1	4	FER32581
G4 1 Deadbolt 4 Roller Lever/Lever Sprung 16mm Faceplate	Latch & Deadbolt	92mm	35mm	Single	4	1	4	FER32580
Europa Night Latch 1 Deadbolt 4 Roller Lever/Lever Sprung 16mm Faceplate	Latch & Deadbolt	92mm	35mm	Split (True)	4	1	4	FER32694

GU FERCO LEVER OPERATED MULTIPOINT DOOR LOCKS

Europa 2 Roller, 2 Mushroom with 16mm Faceplate

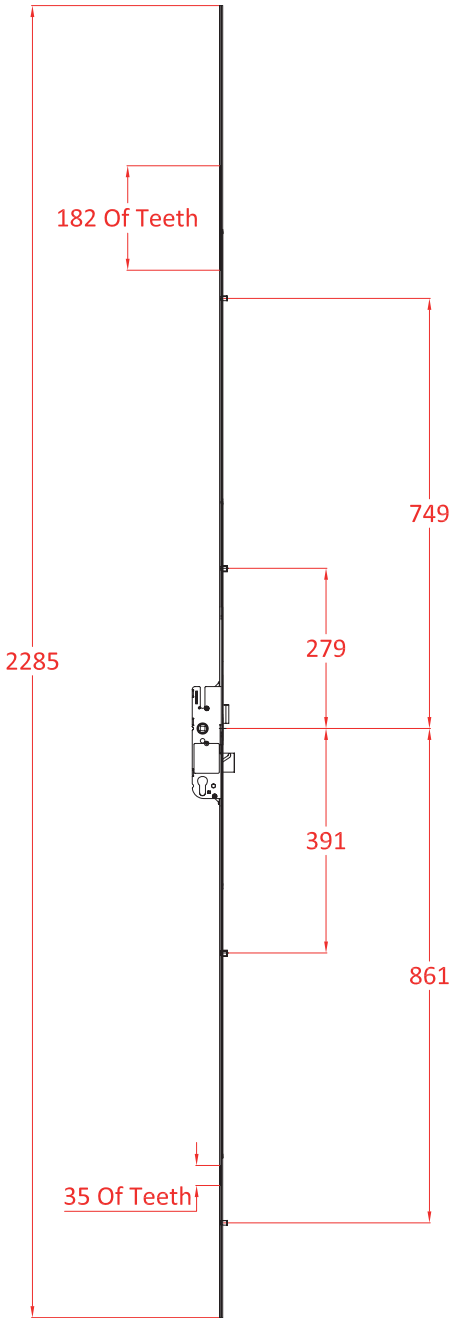

Ideal Repair Lock

- Available in 28mm and 35mm backsets
- 92mm centres
- Standard lever/lever only
- Easy reversible die-cast zamak latch
- Adjustable compressions roller cams and adjustable anti-jemmy steel mushroom cams
- Option to have Shootbolt Extensions fitted
- Lever/lever - allows entry from both sides of the door. To lock the door throw the handle upwards to engage locking points and then deadlock with the key

HANDLES TO SUIT
HOPPE Atlanta 220 (page 245)
TROJAN Sparta 212 (page 238, 240 & 242)

KEEPS TO SUIT
Centre Latch & Deadbolt Keep
Left Hand GUL30014LS
Right Hand GUL30014RS

Single Replacement Roller/Mushroom Keep
FER11637S

GUL30014LS

GUL30014RS

FER11637S

DESCRIPTION	CENTRE CASE	CENTRES	BACKSET	SPINDLE	ROLLER	MUSH	NO. OF KEEPS REQUIRED		PART CODE
							CENTRE	ROLLER & MUSH	
G4 1 Deadbolt 2 Roller 2 Mushroom Lever/Lever Sprung 16mm Faceplate	Latch & Deadbolt	92mm	28mm	Single	2	2	1	4	FER32771
G4 1 Deadbolt 2 Roller 2 Mushroom Lever/Lever Sprung 16mm Faceplate	Latch & Deadbolt	92mm	35mm	Single	2	2	1	4	FER32770

Europa 2 Claw with 16mm Faceplate

- Available in 28mm and 35mm backsets with 92mm centres
- Available in standard lever/lever operation & split spindle (night latch)
- Easy reversible die-cast zamak latch
- Forged tempered steel claws with 23mm projection operate in the same direction to prevent binding if door sash drops
- Door locks have the option to have Shootbolt Extensions fitted
- Lever/lever - allows entry from both sides of the door. To lock the door, throw the handle upwards to engage locking points and then deadlock with the key
- Split spindle (night latch) - only allows entry from the outside when key is inserted. The locks latch will not retract when external handle is used - all other locking points will move but you will need to use your key to retract the latch to gain entry. To lock the door throw the handle upwards to engage locking points and then deadlock with the key

HANDLES TO SUIT
HOPPE Atlanta 220 (page 245)
TROJAN Sparta 212 (page 238, 240 & 242)

KEEPS TO SUIT
Centre Latch & Deadbolt Keep

Left Hand	**Right Hand**
GUL30014LS	GUL30014RS

Single Deadbolt Keep
GUL30013S

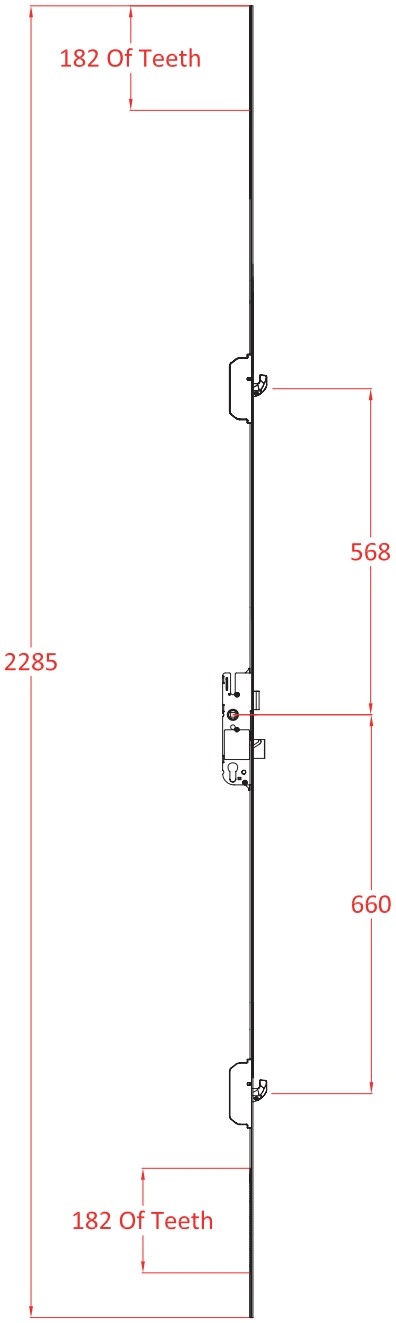

GUL30014LS GUL30014RS GUL30013S

DESCRIPTION	CENTRE CASE	CENTRES	BACKSET	SPINDLE	CLAW	NO. OF KEEPS REQUIRED		PART CODE
						CENTRE	CLAW	
G4 1 Deadbolt 2 Claw Lever/Lever Sprung 16mm Faceplate	Latch & Deadbolt	92mm	28mm	Single	2	1	2	FER32487
G4 1 Deadbolt 2 Claw Lever/Lever Sprung 16mm Faceplate	Latch & Deadbolt	92mm	35mm	Single	2	1	2	FER32486

GU FERCO LEVER OPERATED MULTIPOINT DOOR LOCKS

Europa 2 Claw with 16mm Faceplate

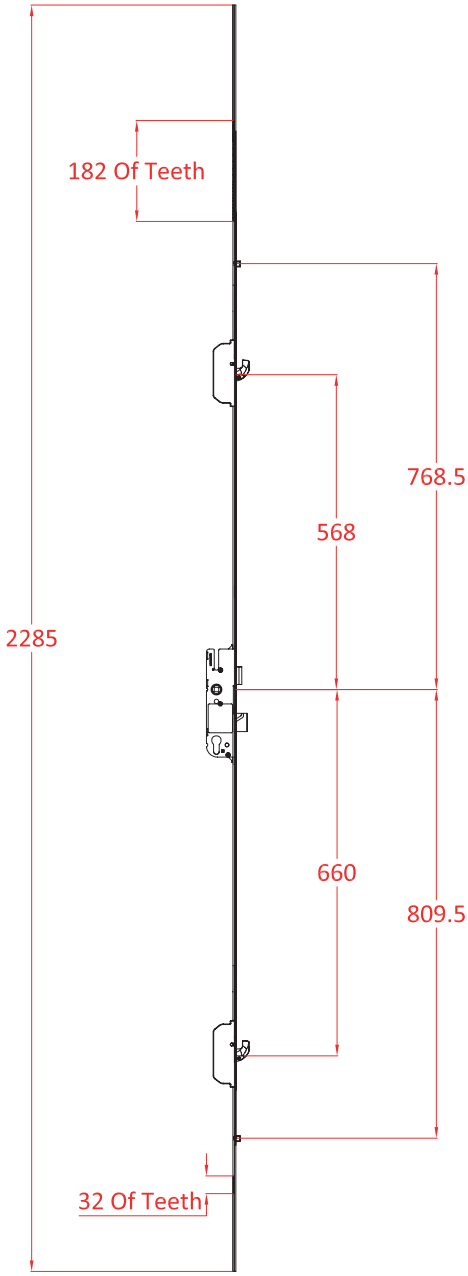

Ideal Repair Lock

- Available in 35mm backsets with 92mm centres
- Easily reversible die-cast zamak latch
- Forged tempered steel claws with 23mm projection operate in the same direction to prevent binding if door sash drops
- Adjustable compressions roller cams
- Option to have Shootbolt Extensions fitted
- Lever/lever - allows entry from both sides of the door. To lock the door throw the handle upwards to engage locking points and then deadlock with the key
- Split spindle (night latch) - only allows entry from the outside when key is inserted. The latch will not retract when external handle is used - all other locking points will move but you will need to use your key to retract the latch to gain entry. To lock the door throw the handle upwards to engage locking points and then dead lock with the key.

HANDLES TO SUIT
HOPPE Atlanta 220 (page 245)
TROJAN Sparta 212 (page 238, 240 & 242)

KEEPS TO SUIT
Centre Latch & Deadbolt Keep

Left Hand	**Right Hand**
GUL30014LS	GUL30014RS

Single Deadbolt Keep
GUL30013S

Single Replacement Roller/Mushroom Keep
FER11637S

GUL30014LS

GUL30014RS

GUL30013S

FER11637S

DESCRIPTION	CENTRE CASE	CENTRES	BACKSET	SPINDLE	ROLLER	CLAW	NO. OF KEEPS REQUIRED			PART CODE
							CENTRE	ROLLER	CLAW	
G4 Night Latch 1 Deadbolt 2 Claw Lever/Lever Sprung 16mm Faceplate	Latch & Deadbolt	92mm	35mm	Split (True)	None	2	1	None	2	FER32600
G4 1 Deadbolt 2 Claw 2 Roller Lever/Lever Sprung 16mm Faceplate	Latch & Deadbolt	92mm	35mm	Single	2	2	1	2	2	FER32602
G4 Night Latch 1 Deadbolt 2 Claw 2 Roller Lever/Lever Sprung 16mm Faceplate	Latch & Deadbolt	92mm	35mm	Split (True)	2	2	1	2	2	FER32610

Ideal Repair Lock

Europa 2 Small Hook with 16mm Faceplate

- Available in 40mm and 45mm backsets with 92mm centres
- Only available in lever/lever style
- Easily reversible die-cast zamak latch
- Central and remote steel deadbolts have 20mm projection
- Lever/lever - allows entry from both sides of the door. To lock the door, throw the handle upwards to engage locking points and then deadlock with the key.

HANDLES TO SUIT
HOPPE Atlanta 220 (page 245)
TROJAN Sparta 212 (page 238, 240 & 242)

KEEPS TO SUIT
Centre Latch & Deadbolt Keep

Left Hand	**Right Hand**
GUL30014LS	GUL30014RS

Single Deadbolt Keep
GUL30013S

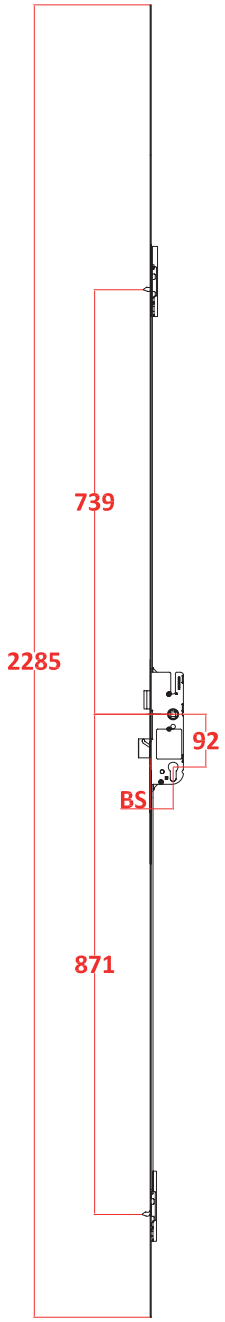

GUL30014LS

GUL30014RS

GUL30013S

DESCRIPTION	CENTRE CASE	CENTRES	BACKSET	SPINDLE	HOOK	NO. OF KEEPS REQUIRED		PART CODE
						CENTRE	HOOK	
G4 1 Deadbolt 2 Hook Lever/Lever 16mm Faceplate	Latch & Deadbolt	92mm	40mm	Single	2	1	2	FER324804
G4 1 Deadbolt 2 Hook Lever/Lever 16mm Faceplate	Latch & Deadbolt	92mm	45mm	Single	2	1	2	FER324805

GU FERCO LEVER OPERATED MULTIPOINT DOOR LOCKS

Europa 3 Dead Bolt Lever/Lever Sprung Extendable with 16mm Faceplate

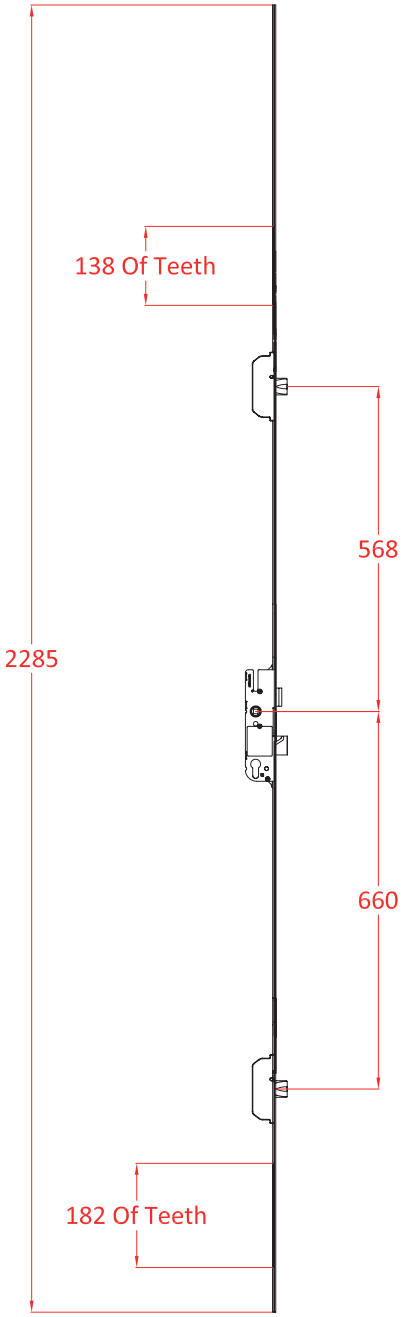

- Available in 28mm and 35mm backsets with 92mm centres
- Easily reversible die-cast zamak latch
- Central and remote steel deadbolts have 20mm projection
- Europa door locks have the option to have Shootbolt Extensions fitted - please check the model before ordering
- Lever/lever - allows entry from both sides of the door, to lock the door throw the handle upwards to engage locking points and then deadlock with the key

HANDLES TO SUIT
HOPPE Atlanta 220 (page 245)
TROJAN Sparta 212 (page 238, 240 & 242)

KEEPS TO SUIT
Centre Latch & Deadbolt Keep

Left Hand	**Right Hand**
GUL30014LS	GUL30014RS

Single Deadbolt Keep
GUL30012

GUL30014LS

GUL30014RS

GUL30012

DESCRIPTION	CENTRE CASE	CENTRES	BACKSET	SPINDLE	DEADBOLT	NO. OF KEEPS REQUIRED		PART CODE
						CENTRE	DEADBOLT	
G4 3 Deadbolt Lever/Lever Sprung 16mm Faceplate, Extendable	Latch & Deadbolt	92mm	28mm	Single	3	1	2	FER32755
G4 3 Deadbolt Lever/Lever Sprung 16mm Faceplate, Extendable	Latch & Deadbolt	92mm	35mm	Single	3	1	2	FER32754

Europa 3 Dead Bolt Leaver/Lever Sprung with 16mm Faceplate

- Available in 28mm and 35mm backsets
- 92mm Centres
- Easily reversible die-cast zamak latch
- Central and remote steel deadbolts have 20mm projection
- Lever/lever - allows entry from both sides of the door. To lock the door throw, the handle upwards to engage locking points and then deadlock with the key

HANDLES TO SUIT
HOPPE Atlanta 220 (page 245)
TROJAN Sparta 212 (page 238, 240 & 242)

KEEPS TO SUIT
Centre Latch & Deadbolt Keep

Left Hand	**Right Hand**
GUL30014LS	GUL30014RS

Single Deadbolt Keep
GUL30012

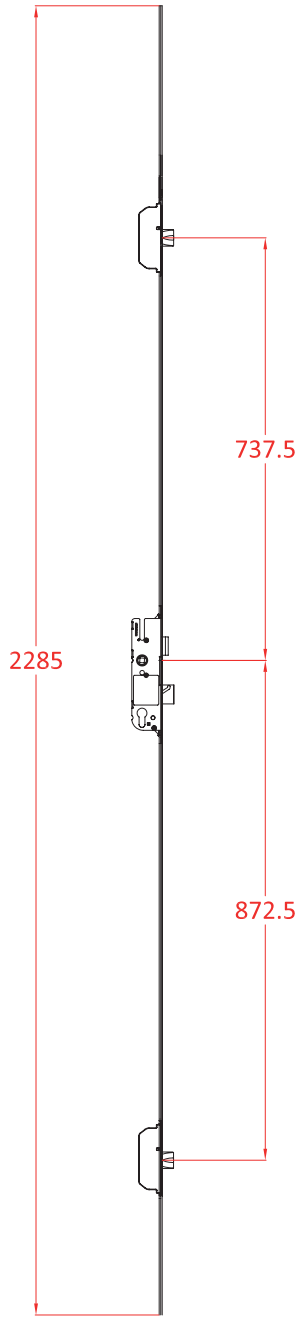

GUL30014LS GUL30014RS GUL30012

DESCRIPTION	CENTRE CASE	CENTRES	BACKSET	SPINDLE	DEADBOLT	NO. OF KEEPS REQUIRED		PART CODE
						CENTRE	DEADBOLT	
G4 3 Deadbolt Lever/Lever Sprung 16mm Faceplate	Latch & Deadbolt	92mm	28mm	Single	2	1	2	FER32219
G4 3 Deadbolt Lever/Lever Sprung 16mm Faceplate	Latch & Deadbolt	92mm	35mm	Single	2	1	2	FER32218

Europa 2 Small Hook with 16mm Faceplate

Ideal Repair Lock

- Passive leaf or slave mechanism
- Available in 35mm backset

HANDLES TO SUIT
HOPPE Atlanta 220 (page 245)
TROJAN Sparta 212 (page 238, 240 & 242)

KEEPS TO SUIT
Not Applicable

EXTENSIONS TO SUIT
FER67600S
FER16798S

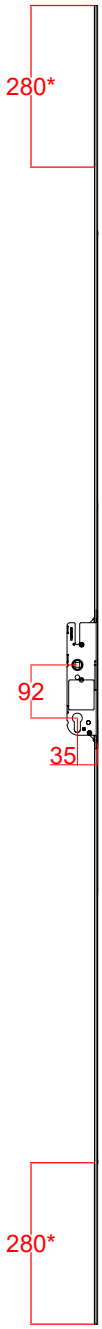

FER67600S FER16798S

DESCRIPTION	CENTRE CASE	CENTRES	BACKSET	SPINDLE	NO. OF SHOOTBOLT KEEPS REQUIRED	PART CODE
G4 Slave Sprung Extendable 16mm Faceplate	No Locking Points	92mm	35mm	Single	2	FER32570

GU Ferco Secury Europa 4 Roller Key Wind Up Door Lock

- Safety door locks with 4 roller cams
- The adjustable roller cams allow for compression adjustment
- Fire rated version available on request
- Reversible latch and deadbolts make the locks non-handed
- The lock case is fully enclosed - dirt or other foreign bodies cannot obstruct the operation of the lock
- All openings in the lock case are provided with bushings - drilling swarf cannot fall into the drive mechanism
- The dimensions of the lock case and the additional locks correspond to the specifications of DIN 18251 part 3
- Suitable for timber, PVC-u and aluminium doors
- Optimum corrosion protection with hardware surface
- Finish Specification (G4) Silver - FerGuard
- Locking and unlocking: manual. The roller cams are operated via the cylinder key

KEEPS TO SUIT
Centre Latch & Deadbolt Keep

Left Hand	**Right Hand**
DSP10021	DSP10022

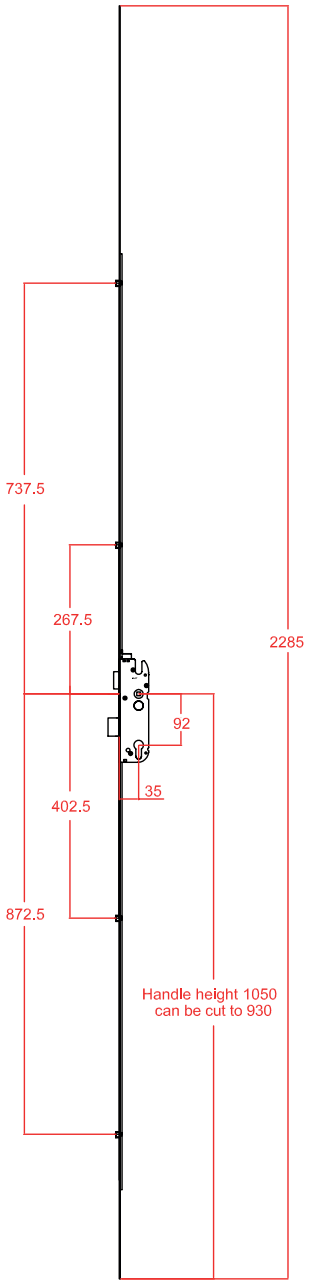

DSP10021 DSP10022

DESCRIPTION	CENTRE CASE	CENTRES	BACKSET	SPINDLE	ROLLER	NO. OF KEEPS REQUIRED		PART CODE
						CENTRE	ROLLER	
Key Wind Up Lever/Lever	Latch & Deadbolt	92mm	26mm	Single	4	1	4	GSB16126S
Key Wind Up Lever/Lever	Latch & Deadbolt	92mm	30mm	Single	4	1	4	GSB16130
Key Wind Up Lever/Lever	Latch & Deadbolt	92mm	35mm	Single	4	1	4	GSB16135
Key Wind Up Lever/Lever	Latch & Deadbolt	92mm	45mm	Single	4	1	4	GSB16145S

SLK Scorpion 3 Hook, 2 Roller with 16mm Faceplate

10 YEAR WARRANTY

Ideal Repair Lock

- Split spindle (night latch) feature
- 92mm PZ centre and 35mm backset
- Cycle tested to 100,000 cycles
- 10 year warrenty
- 38mm wide tensile steel keeps for increased security

HANDLES TO SUIT
HOPPE Atlanta 220 (page 245)
TROJAN Sparta 212 (page 238, 240 & 242)

KEEPS TO SUIT
Centre Latch & Hookbolt Keep
Not available

Single Hookbolt Keep
DSP10023

Single Replacement Roller/Mushroom Keep
FER116375

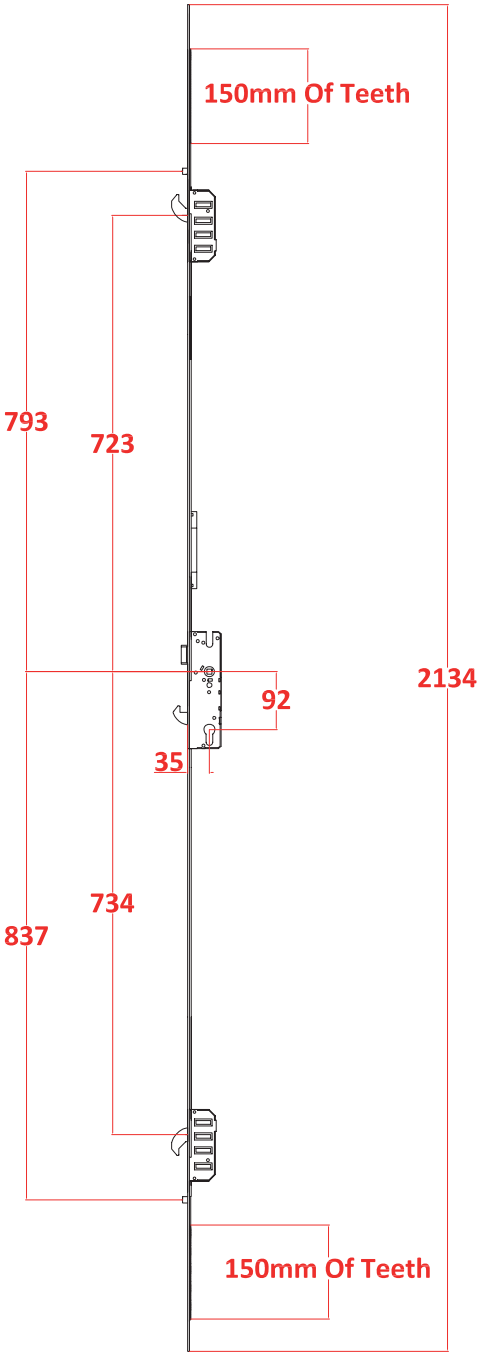

DSP10023

FER11637S

DESCRIPTION	CENTRE CASE	CENTRES	BACKSET	SPINDLE	ROLLER	HOOK	NO. OF KEEPS REQUIRED			PART CODE
							CENTRE	ROLLER	HOOK	
SLK Night Latch 3 Hook 2 Roller Sprung 16mm Faceplate	Latch & Hookbolt	92mm	35mm	Split (True)	2	2	1	2	2	WIN10001

Ideal Repair Lock

Trulock+ 2 Hook with 16mm Faceplate

- Primarily designed for the composite, steel and timber door market
- Enhanced tensile steel hook design with a 4.5mm chamfer, which offers reduced operating forces and increased on-site installation tolerance
- 16mm wide faceplate
- Tested in Doors to PAS 23/24 Enhanced
- 92mm Centres
- Lever/lever - allows entry from both sides of the door. To lock the door, throw the handle upwards to engage locking points and then deadlock with the key
- Split spindle (night latch) - only allows entry from the outside when key is inserted. The locks latch will not retract when external handle is used - all other locking points will move but you will need to use your key to retract the latch to gain entry. To lock the door throw the handle upwards to engage locking points and then deadlock with the key

HANDLES TO SUIT
HOPPE Atlanta 220 (page 245)
TROJAN Sparta 212 (page 238, 240 & 242)

KEEPS TO SUIT
Centre Latch & Deadbolt Keep

Left Hand	**Right Hand**
DSP10021	DSP10022

Single Hookbolt Keep
DSP10023

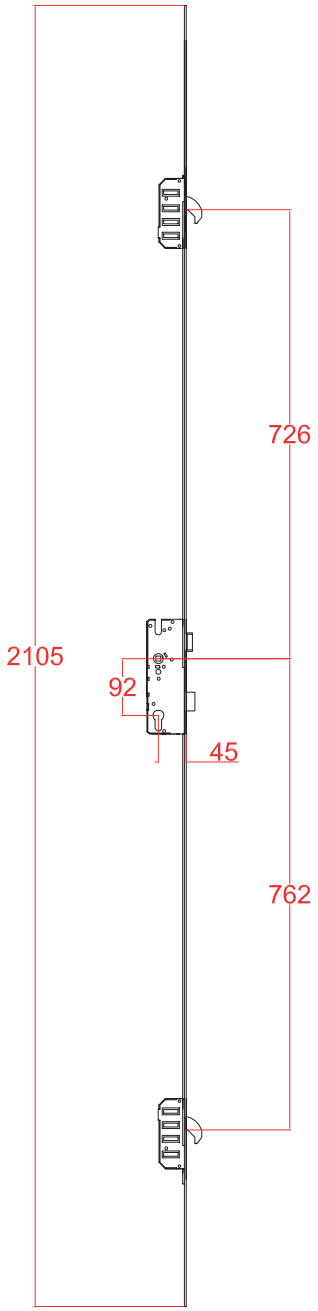

DSP10021 DSP10022 DSP10023

DESCRIPTION	CENTRE CASE	CENTRES	BACKSET	SPINDLE	HOOK	NO. OF KEEPS REQUIRED		PART CODE
						CENTRE	HOOK	
Trulock Left Hand 2 Hook Lever/Lever Sprung 16mm Faceplate	Latch & Deadbolt	92mm	45mm	Single	2	1	2	WIN24500L
Trulock Right Hand 2 Hook Lever/Lever Sprung 16mm Faceplate	Latch & Deadbolt	92mm	45mm	Single	2	1	2	WIN24500R

Trulock+ 2 Hook with 20mm Faceplate Radius Ends

Ideal Repair Lock

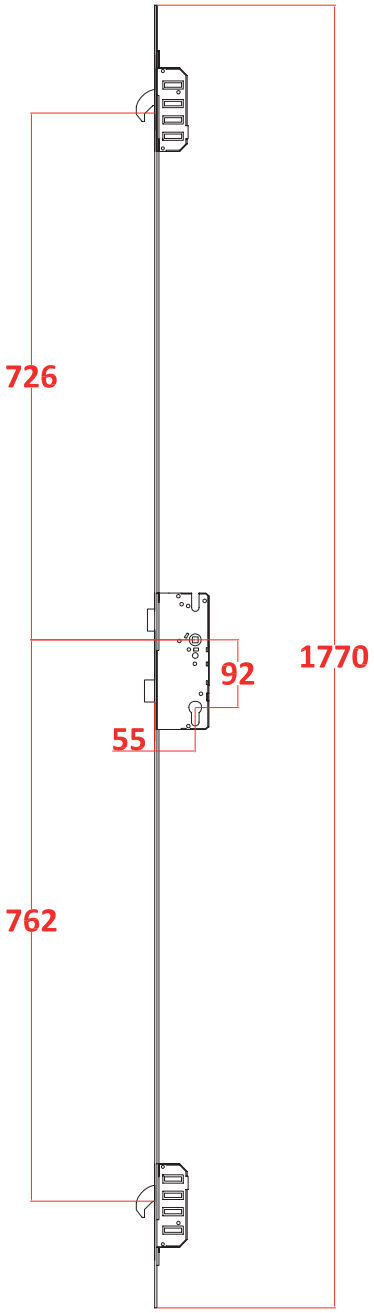

- Primarily designed for the composite, steel and timber door market
- Enhanced tensile steel hook design with a 4.5mm chamfer, which offers reduced operating forces and increased on-site installation tolerance
- 20mm wide faceplate with radiused ends
- Tested in doors to PAS 23/24 Enhanced
- 92mm Centres
- Lever/lever and split spindle (night latch) operations available
- Lever/lever - allows entry from both sides of the door. To lock the door, throw the handle upwards to engage locking points and then deadlock with the key
- Split spindle (night latch) - only allows entry from the outside when key is inserted. The locks latch will not retract when external handle is used - all other locking points will move but you will need to use your key to retract the latch to gain entry. To lock the door throw the handle upwards to engage locking points and then dead lock with the key.

HANDLES TO SUIT
HOPPE Atlanta 220 (page 245)
TROJAN Sparta 212 (page 238, 240 & 242)

KEEPS TO SUIT
Centre Latch & Deadbolt Keep

Left Hand	**Right Hand**
DSP10021	DSP10022

Single Hookbolt Keep
DSP10023

DSP10021

DSP10022

DSP10023

DESCRIPTION	CENTRE CASE	CENTRES	BACKSET	SPINDLE	HOOK	NO. OF KEEPS REQUIRED		PART CODE
						CENTRE	HOOK	
Trulock Left Hand 2 Hook Lever/Lever Sprung 20mm Faceplate Radius Ends	Latch & Deadbolt	92mm	55mm	Single	2	1	2	WIN25510L
Trulock Right Hand 2 Hook Lever/Lever Sprung 20mm Faceplate Radius Ends	Latch & Deadbolt	92mm	55mm	Single	2	1	2	WIN25510R

Ideal Repair Lock

Cobra 2 Hook with 16mm Faceplate

- Tested in accordance with DIN 18103 (burglar resistant doors) and approved by major UK insurance companies
- 25 mm throw solid brass hooks
- 92mm centres
- 35 and 45mm backsets available
- Lever/lever or split spindle (night Latch) operations

HANDLES TO SUIT
HOPPE Atlanta 220 (page 245)
TROJAN Sparta 212 (page 238, 240 & 242)

KEEPS TO SUIT
Centre Latch & Deadbolt Keep

Left Hand	**Right Hand**
DSP10021	DSP10022

Single Hookbolt Keep
DSP10023

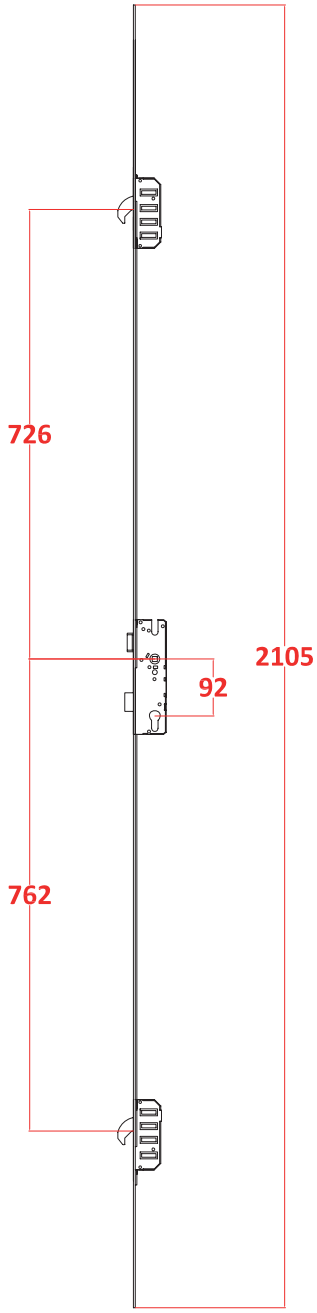

DSP10021

DSP10022

DSP10023

DESCRIPTION	CENTRE CASE	CENTRES	BACKSET	SPINDLE	HOOK	NO. OF KEEPS REQUIRED		PART CODE
						CENTRE	HOOK	
Cobra 2 Hook Lever/Lever Night Latch Sprung 16mm Faceplate	Latch & Deadbolt	92mm	35mm	Split (True)	2	1	2	WIN33501S
Cobra 2 Hook Lever/Lever Night Latch Sprung 16mm Faceplate	Latch & Deadbolt	92mm	45mm	Split (True)	2	1	2	WIN34501S

Cobra 2 Hook Lift Lever with 20mm Faceplate Radius Ends

10 YEAR WARRANTY

Ideal Repair Lock

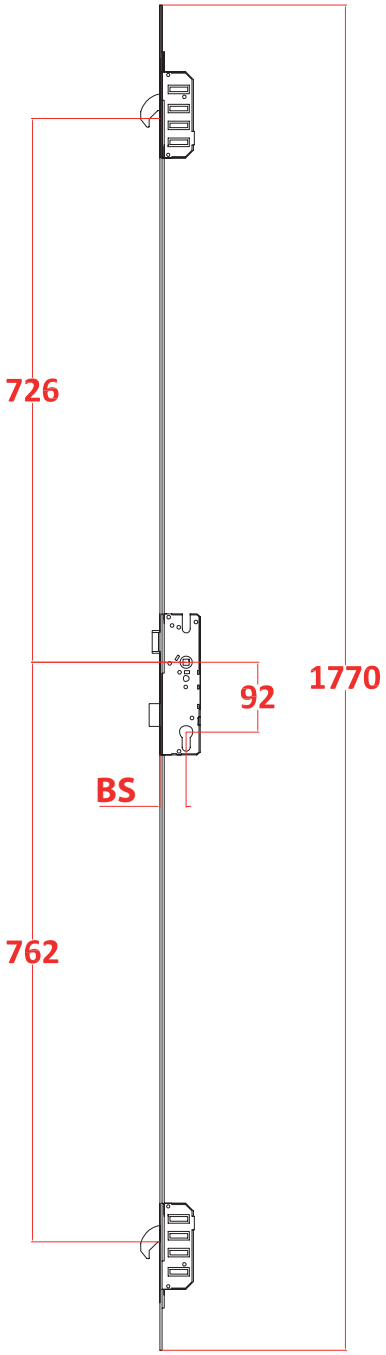

- Cobra door lock with 2 hooks, centre latch & deadbolt
- 25mm throw solid brass and plated 'low friction' hook locking points
- 16mm or 20mm faceplates square or rounded
- 10 year mechanical warranty
- 92mm PZ centre
- Split spindle or lever/lever function
- Available in 35mm backset
- Cobra lock also available with safety catch

HANDLES TO SUIT
HOPPE Atlanta 220 (page 245)
TROJAN Sparta 212 (page 238, 240 & 242)

KEEPS TO SUIT
Centre Latch & Deadbolt Keep

Left Hand	**Right Hand**
DSP10021	DSP10022

Single Hookbolt Keep
DSP10023

DSP10021

DSP10022

DSP10023

DESCRIPTION	CENTRE CASE	CENTRES	BACKSET	SPINDLE	HOOK	NO. OF KEEPS REQUIRED		PART CODE
						CENTRE	HOOK	
Cobra 2 Hook Lever/Lever Sprung 20mm Faceplate Radius Ends	Latch & Deadbolt	92mm	35mm	Single	2	1	2	WIN33510S

Ideal Repair Lock

Cobra 2 Hook with 20mm Faceplate Radius Ends

- Tested in accordance with DIN 18103 (burglar resistant doors) and approved by major UK insurance companies
- 25mm throw solid brass hooks
- 92mm centres
- 20mm wide faceplate
- 45 and 55mm backsets available
- Lever/lever or split spindle (night Latch) operations

HANDLES TO SUIT
HOPPE Atlanta 220 (page 245)
TROJAN Sparta 212 (page 238, 240 & 242)

KEEPS TO SUIT
Centre Latch & Deadbolt Keep

Left Hand	**Right Hand**
DSP10021	DSP10022

Single Hookbolt Keep
DSP10023

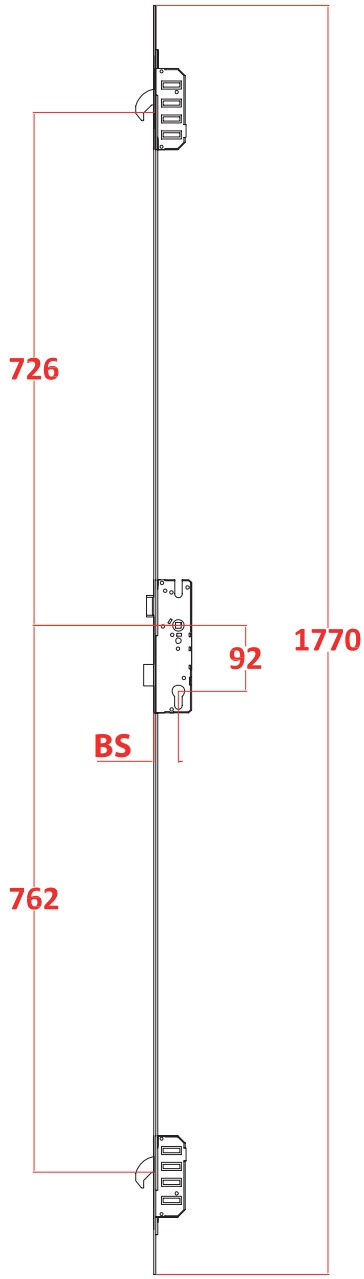

DSP10021

DSP10022

DSP10023

DESCRIPTION	CENTRE CASE	CENTRES	BACKSET	SPINDLE	HOOK	NO. OF KEEPS REQUIRED		PART CODE
						CENTRE	HOOK	
Cobra 2 Hook Lever/Lever Sprung 20mm Faceplate Radius Ends	Latch & Deadbolt	92mm	45mm	Single	2	1	2	WIN34510S
Cobra 2 Hook Lever/Lever Night Latch Sprung 20mm Faceplate Radius Ends	Latch & Deadbolt	92mm	45mm	Split (True)	2	1	2	WIN34511S
Cobra 2 Hook Lever/Lever Night Latch Sprung 20mm Faceplate Radius Ends	Latch & Deadbolt	92mm	55mm	Split (True)	2	1	2	WIN35511S

Cobra 2 Hook with FA Double Dead Lock Feature

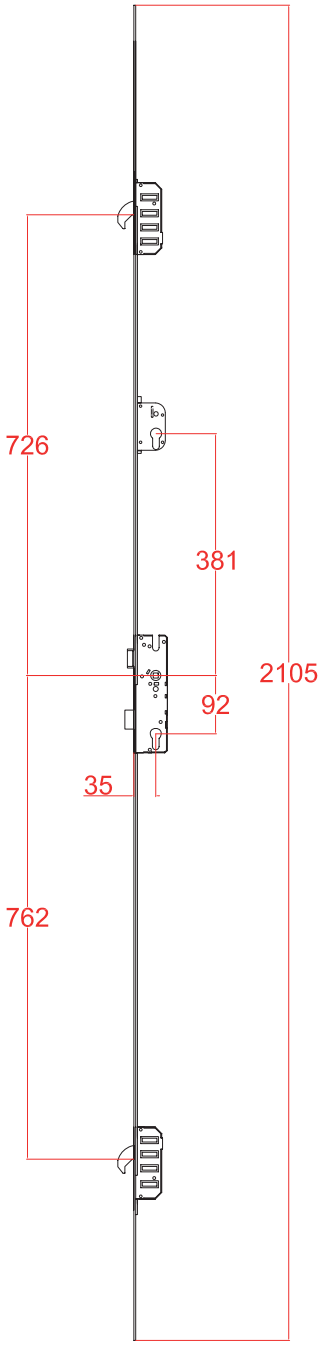

Ideal Repair Lock

- Tested in accordance with DIN 18103 (burglar resistant doors) and approved by major UK insurance companies
- 25mm throw solid brass hooks
- 92mm centres
- 35mm backsets available
- Complete with FA double deadlock (BS 10621 functionality compliant FA housing). The FA double dead lock offers two locking cylinders. When a dwelling is unoccupied, both of the cylinders can be locked with the same key. This prevents intruders leaving through the front door by use of the bottom thumb turn barrel.

HANDLES TO SUIT
HOPPE Atlanta 220 (page 245)
TROJAN Sparta 212 (page 238, 240 & 242)

KEEPS TO SUIT
Centre Latch & Deadbolt Keep

Left Hand	**Right Hand**
DSP10021	DSP10022

Single Hookbolt Keep
DSP10023

DSP10021

DSP10022

DSP10023

DESCRIPTION	CENTRE CASE	CENTRES	BACKSET	SPINDLE	HOOK	NO. OF KEEPS REQUIRED		PART CODE
						CENTRE	HOOK	
Cobra 2 Hook Lever/Lever Night Latch Sprung 16mm Faceplate	Latch & Deadbolt	92mm	35mm	Split (Twin)	2	1	2	WIN43501S

Ideal Repair Lock

MK1 3 Hook, 2 Roller with Linear Bolt and 16mm Faceplate

- MK1 Millenco door lock with 117/86mm centres
- 35mm backset door lock
- 3 hooks, 2 Linear bolts and 2 roller locking points
- Non-handed
- 16mm wide faceplate

HANDLES TO SUIT
Not available

KEEPS TO SUIT
Not available

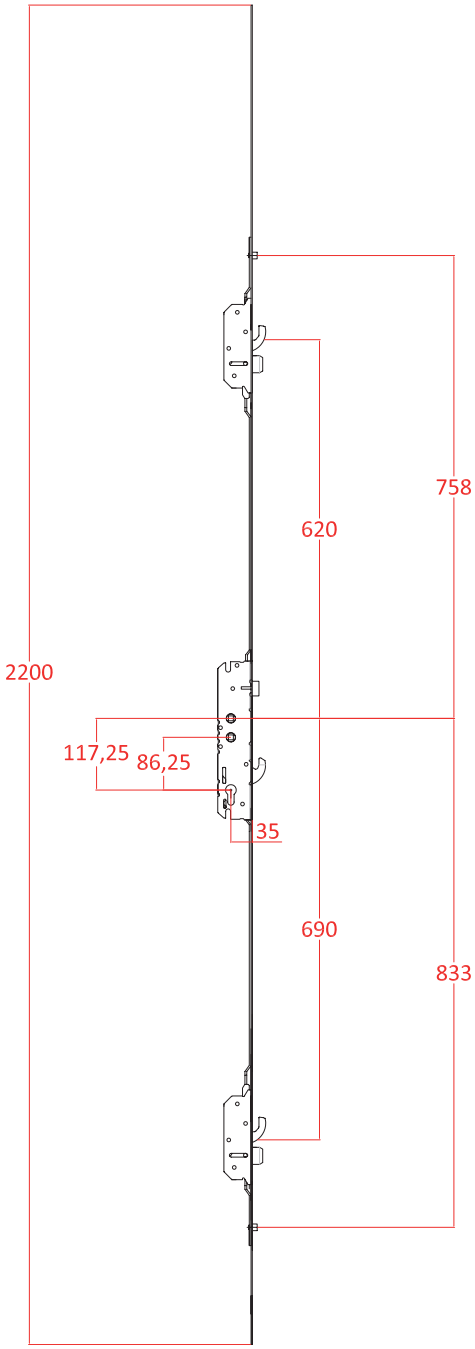

DESCRIPTION	CENTRE CASE	CENTRES	BACKSET	SPINDLE	ROLLER	HOOK & LINEAR BOLT	NO. OF KEEPS REQUIRED		PART CODE
							CENTRE	HOOK & LINEAR BOLT	
3 Hook, Latch, 2 Linear Bolt, 2 Roller	Latch Hook & Linear	117/86mm	35mm	Twin	2	2	1	2	MIL10001

FULLEX LEVER OPERATED MULTIPOINT DOOR LOCKS

fullex locks limited

Crime Beater Composite Door Locks

SBD Approved

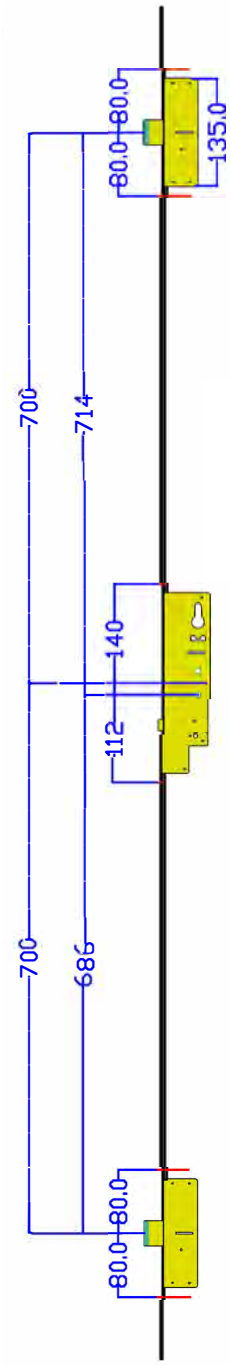

- Tested to PAS 23/24 and licensed to Secured by Design
- 3 Dead bolt lock with 2 tapered steel dead bolts
- 68mm Centre PZ
- 45mm Backset
- Radiused ends for composite door applications
- 20mm wide stainless steel faceplate
- Faceplate is 1720mm long

DESCRIPTION	CENTRE CASE	CENTRES	BACKSET	SPINDLE	TAPERED STEEL DEADBOLTS	NO. OF KEEPS REQUIRED		PART CODE
						CENTRE	DEADBOLT	
3 Deadbolt Lock with 2 Tapered Steel Deadbolts, 20mm Faceplate Radius Ends	Latch & Deadbolt	68mm	45mm	Twin	2	1	2	FUL10002

SL16 3 Deadbolt 68mm PZ Centre Composite Door Locks

The Fullex replacment SL16 door lock is suitable for use on timber and composite doors.

- 3 deadbolt locking points
- suitable for timber and composite doors
- split spindle
- 20mm wide stainless steel faceplate
- Faceplate is 1770mm long

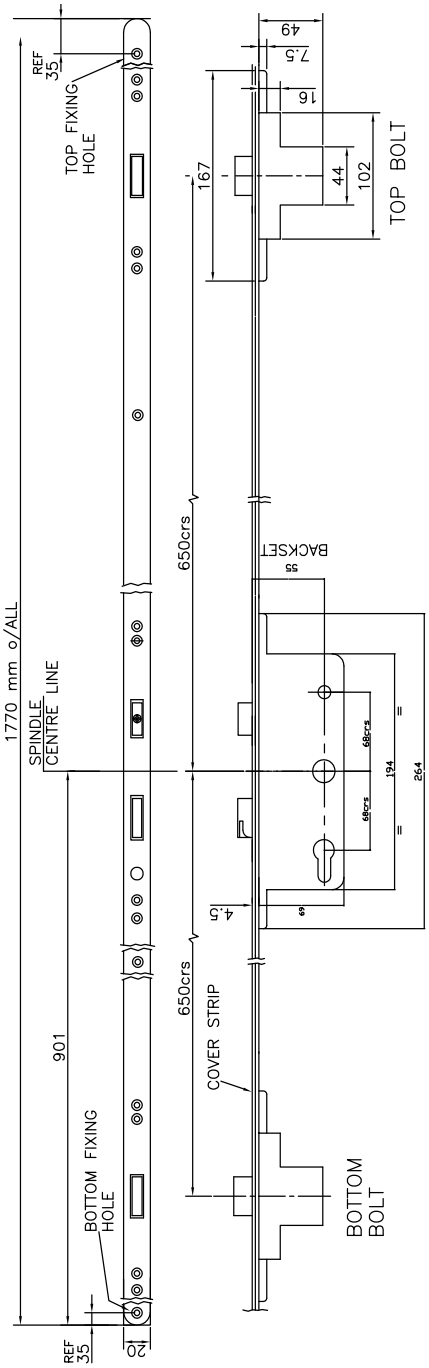

DESCRIPTION	CENTRE CASE	CENTRES	BACKSET	SPINDLE	DEADBOLTS	NO. OF KEEPS REQUIRED		PART CODE
						CENTRE	DEADBOLT	
3 Deadbolt, 20mm Faceplate Radius Ends	Latch & Deadbolt	68mm	55mm	Single	2	1	2	FUL16074

fullex locks limited

SL16 3 Deadbolt 1 Hook 68mm PZ Centre Door Lock

SBD Approved

- Tested to PAS 23/24 and licensed to Secured by Design
- 35mm backset, Lever/Lever or split spindle operation 68mm Centre PZ
- 3 Deadbolt 1 hook lock all 3 are tapered steel dedbolts
- 16mm wide stainless steel faceplate
- Faceplate is 2200mm long

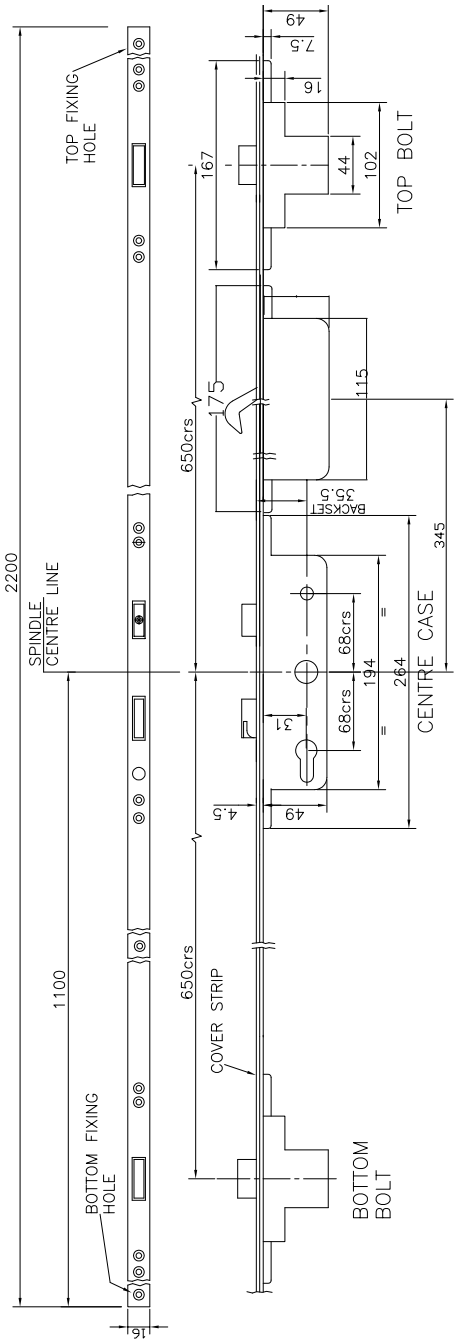

DESCRIPTION	CENTRE CASE	CENTRES	BACKSET	SPINDLE	TAPERED STEEL DEADBOLTS	HOOK	NO. OF KEEPS REQUIRED			PART CODE
							CENTRE	DEADBOLT	HOOK	
SL16 3 Deadbolt Lock with 2 Deadbolts & Hook, 2200 x 16mm Faceplate	Latch & Deadbolt	68mm	35mm	Single	2	1	1	2	1	FUL16009

SBD Approved

SL16 3 Deadbolt 68mm PZ Centre Door Lock

fullex locks limited

- Tested to PAS 23/24 and licensed to Secured by Design
- 35mm backset, Lever/Lever or split spindle operation 68mm Centre PZ
- 3 Deadbolt lock with 2 tapered steel deadbolts
- 16mm wide stainless steel faceplate
- Faceplate is 2200mm long

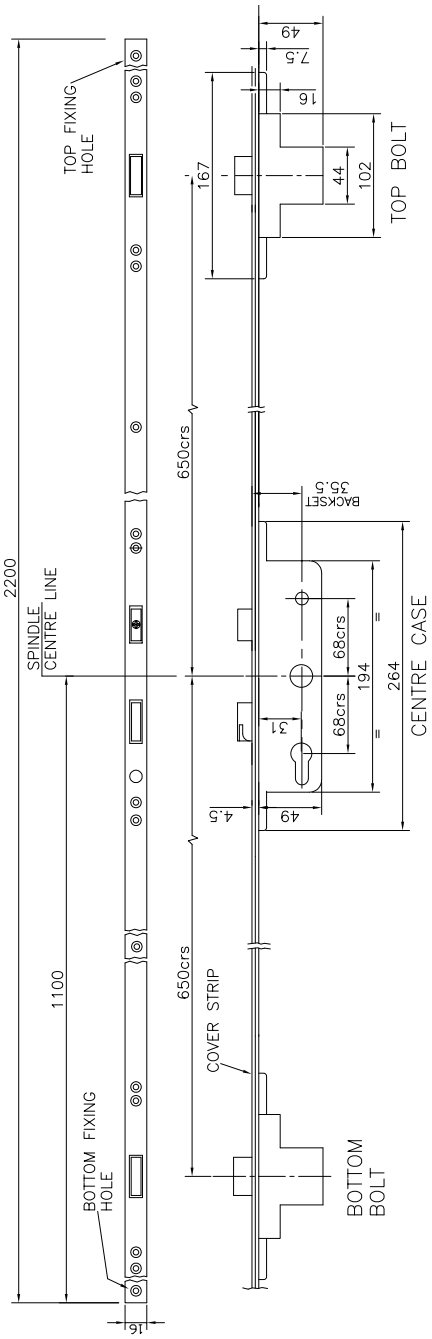

DESCRIPTION	CENTRE CASE	CENTRES	BACKSET	SPINDLE	TAPERED STEEL DEADBOLTS	NO. OF KEEPS REQUIRED		PART CODE
						CENTRE	DEADBOLT	
SL16 3 Deadbolt Lock with 2 Deadbolts, 2200 x 16mm Faceplate	Latch & Deadbolt	68mm	35mm	Split	2	1	2	FUL16017

BRAND		TYPE		ACCESS					NOTES	TRANSMIT TYPE			PAGE
		HANDLE	LOCK	APP	CARD	CODE	FINGER PRINT	TAG		RF	BLU E-TOOTH	Z-WAVE	
Avantis	Kubu		•	•					Module, up to 4 locks, notifications, works with Alexa, app has many new features in devopment. Battery Operated module lasts 1 year, mains for transsender	•			205
Yale	Connexis™	•		•	•			•	Links to Yale Smart home products inc. Alarm system. Retro fit, battery operated lasts 1 year, key override.		•	•	206-207
Yale	Keyless	•			•	•		•	Reftro fit, battery operated				208
Maco	openDoor		•		•	•	•	•	Mains powered				209

Set-for-Smart Kubu Door Lock

Think smart locks are too costly or complicated to offer as standard? Think again! The new Kubu smart-equipped lock from Avantis Hardware is bringing smart hardware to the masses – simply and affordably – even for door manufacturers who build hundreds of doors per week! A competitive price point keeps your profit margins intact while clever engineering means Kubu integrates effortlessly into your current production line with no additional work or disruption on the factory floor, and no support burden for the fabricator or installer.

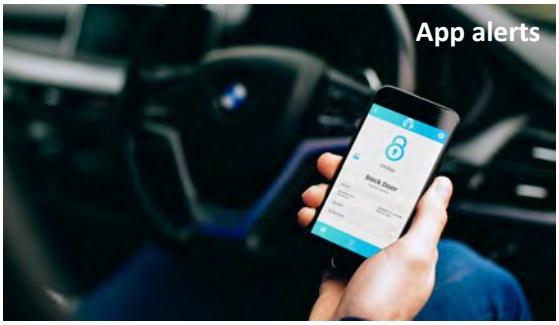

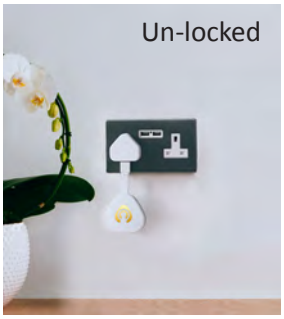

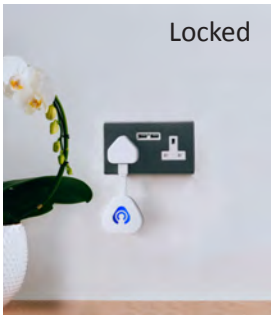

How does Kubu work?

From the moment a door is fitted with a Kubu lock at the factory, it is effectively 'primed for smart'. The homeowner then chooses at any time to purchase the Kubu starter kit and App and switch on smart capability themselves. Set-up is a cinch and takes just 15 minutes, after which they can check lock status remotely, track access and receive real-time notifications anywhere via their smart phone.

It's a no-sweat smart hardware solution

- ✔ **Future-ready and affordable** – easy, low-risk way for fabricators and fitters to offer smart hardware as standard and in volume to capitalize on the Smart Home Revolution.
- ✔ **Fuss-free fitting** – Kubu-equipped door locks are very easy to fit via a standard machine-routed prep, and because the electronic smart module is battery-powered and long life, there's no hardwiring required!
- ✔ **Stand out from the crowd** – This home tech solution adds real value for the homeowner, which all helps to give you the edge over your competitors and drive sales.
- ✔ **No extra work involved** – Fabricators and installers fit the Kubu equipped door lock and leave the homeowner to activate smart capability simply by purchasing a starter kit and installing the module and home hub themselves. You won't have to answer technical queries from consumers either, as there's a dedicated support team to take care of all that.
- ✔ **Free marketing support** – You'll have access to a wide range of free marketing materials to help you explain the benefits, win over customers and grow your business.

Conexis™ L1 Smart Door Lock

2 YEAR GUARANTEE

Yale has launched the brand new Conexis™ L1 Smart Door Lock, putting homeowners in full control of their home security. The new lock allows users to configure, control and unlock their door all from their smartphone via the new Bluetooth low energy app.

Please note it is suitable for majority of 92mm Centre Locks!

- Operating temperature -15°C to 55°C
- IP55 weather resistant
- PAS 24 compliant
- Low power consumption - batteries last up to 1 year
- 4 x AA batteries
- 2 year guarantee with UK Customer Support

CHROME	SATIN NICKEL	GOLD	BOX QTY.
YCN10002	YCN10001	YCN10008	1

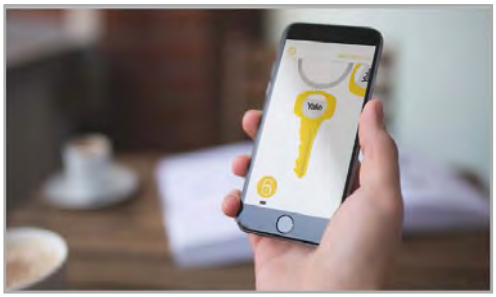

Say Goodbye to Keys – Operate with key card, key tag, phone tag and phone app.

Bluetooth Yale Lock App – Simply twist the phone with the app open to unlock the door.

Stay in Control – Add additional contacts from anywhere in the world (Note: contacts must download the Yale app).

Ways to open your door

Key Card

Key Tag

Phone Tag (Sold Seperatley)

Yale Conexis™ L1 Smart Door Lock Accessories

Key Tags

Phone Tag (Sold Seperatley)

Yale Key Tag

- The Yale key tag is designed for use with the Yale Keyfree or Keyless lock, plus the Yale Conexis® L1 smart door lock
- The key tag allows you to unlock the door by placing the tag against the face of the Keyfree or Keyless device
- Available in black or white
- Yale Part Number: YD-01-CON-RFIDT-BLK-S (black) or YD-01-CON-RFIDT-WHT-S (white)

Yale Module

- The Yale module is designed for use with the Yale Keyfree or Keyless lock, plus the Yale Conexis® L1 smart door lock
- The module allows the remote locking and unlocking of the device through the Yale smartphone alarm and CCTV systems free smartphone app
- Includes: 1 x Yale Module
- Please note only one module can be installed and used at a time
- Yale Part Number: KFCON-MOD-YALE-S

Yale Z-Wave Module

- The Yale Z-Wave module is designed for use with the Yale Keyfree or Keyless lock, plus the Yale Conexis® L1 smart door lock
- The module allows the Keyfree or Keyless lock to connect to leading smart home systems that use the Z-Wave protocol
- Once connected the device can be locked and unlocked remotely using the smartphone app. The app enables user specific pin codes to be added remotely and tracked through entry audit trails.
- Please ensure your device and smart home systems is Z-Wave compatible
- Includes: 1 x Z-Wave module
- Please note only one module can be installed and used at a time
- Yale Part Number: KFCON-MOD-ZW-S

DESCRIPTION	WHITE	BLACK
Key Tags	YCN99991	YCN99990
Phone Tags (Pack of 2)	YCN99993	YCN99992

DESCRIPTION	YALE	Z-WAVE
Modules	YKF40001	YKF40002

Keyless Digital Lock

- Touch screen keypad
- Wireless & battery operated
- Retrofits with most 60mm nightlatches (not included)
- Simple to programme & change your 4 -12 digit PIN code
- User codes and settings remain if batteries are replaced
- Fake PIN feature keeps your PIN code secret and safe
- Temporary PIN code for visitors so no need to reveal your family PIN code
- 3 minute lock out if the code is entered incorrectly 5 times
- Low battery warning with emergency battery connection
- This lock should be fitted in conjunction with a maximum security BS 3621
- Mortice lock to be insurance approved

Specification

- Front body measures 64mm W x 153mm H x 51mm D
- Operating temperature -15°c to 55°c
- IP55 weather resistant
- Cycle tested to 120,000 cycles
- Low power consumption - unlocks up to 10,000 times with one set of 4 x AA batteries
- Blue backlit keypad for night time entry

CHROME	BOX QTY.
YDL11002A	1

Touch the screen with the palm of your hand or fingers to activate.

Enter a PIN code followed by Q button.

Turn knob to open door.

openDoor - Keyless Door Opening

Forget your house keys!

The MACO openDoor access control system gives you the ability to unlock an entrance door without the need for a key. It can be added to the Z-TA Comfort motor-driven door lock. openDoor is available in three doorleaf-integrated versions: TOUCH, CODE and TRANSPONDER-PLUS.

The value of all three system versions can be summarised in a single formula:

Easy operation + security = convenience.

CODE | TOUCH

TRANSPONDER-PLUS

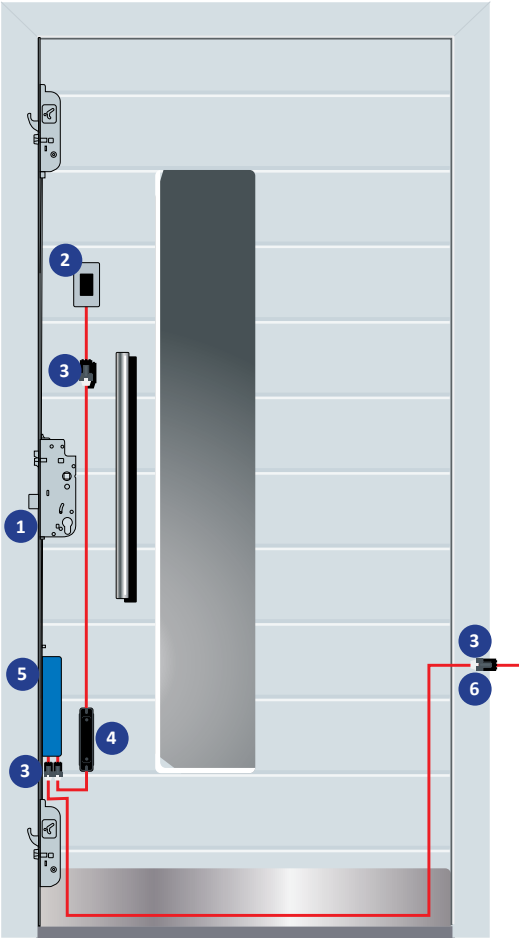

The benefits at a glance: MACO PROTECT Z-TA Comfort door lock + MACO openDoor access control system

1. In combination with the 3-latch Z-TA Comfort door lock: Extremely high security thanks to automatic locking of the steel hooks and the central dead bolt
2. Standardised installation thanks to the same dimensions with all openDoor solutions
3. Pre-assembled plug-in cable: Eliminates the possibility of incorrect connection
4. Tamper-proof: Control unit protected against unauthorised access
5. Maximum home comfort thanks to a low-noise door lock motor
6. Easy hanging and removal of the door via plug-in cable transition

Easy to install thanks to the small number of system components.

To order please contact our technical department on 01234 242738

Panic Bar Overview

BRAND	PROFILE			LOCKING POINTS		TYPE			FINISH				KEY TYPE		CERTIFICATES		PAGE NO.
	PVCu	COMPOSITE	ALUMINIUM	3 PONT	MULTIPOINT DOOR LOCK	MASTER	SLAVE	OUSIDE ACCESS	WHITE	SILVER	GREEN	BLACK	NON-RETAINING	RETAINING	CE	WARRANTY	
Strand	•	•	•	•		•	•	•	•	•		•	•		EN 1125 EN 1179		211
Yale	•	•	•		3 Hook, 4 Roller Latch & Deadbolt	•	•	•			•	•		•	EN 1125 EN 1179	10 Years	212
Omec	•	•	•	•		•	•	•			•	•	•		EN1125 :2008		213

TYPE	EXPLANATION	SYMBOL
BS EN 1125	Panic Hardware with cross arm - This type of device is suitable for all public buildings such as hotels, schools, shops, hospitals, nightclubs etc. where people are unfamiliar with the surroundings.	CE ANTIPANIC PH355/7 BS BS EN 1125 CERTIFIED TO
BS EN 1179	Emergency Exit Hardware with push pad - This type of device is suitable for offices and premises where people are familiar with the exits and the hardware and therefore a panic situation is unlikely to develop.	CE ANTIPANIC PH355/7 BS BS EN 1179 CERTIFIED TO

ANTIPANIC PH355/7 BS EN1125 CERTIFIED TO 3 7 6 1 1 4 2 2 A

ANTIPANIC PH356 BS EN179 CERTIFIED TO 3 7 6 1 1 4 2 2 B

Anti-panic Modular Hardware

STRAND HARDWARE LIMITED
THE BEST WAY OUT...

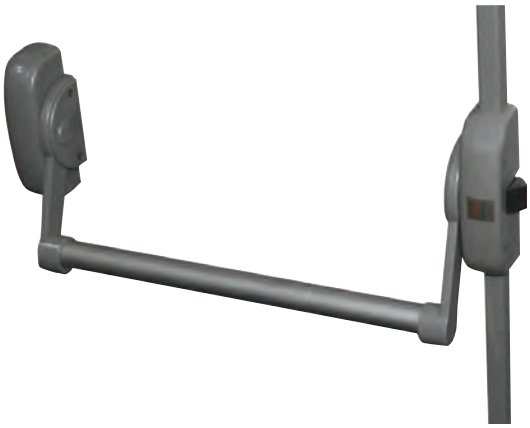

- CE approved panic hardware system conforming to EN 1125
- Precision engineered to open with minimum pressure
- Entirely surface mounted to maintain the integrity of door and frame
- Suits doors up to 2700mm high and 1100mm wide
- Available from stock in white or silver
- Full mounting instructions come with every kit
- Outside access available. Note this non key-retaining access handle allows removal of the key once unlocked. Access remains unlocked until the key is used to re-lock the outside access handle.

NB. To ensure compliance with current fire and building regulations we recommend consultation with local fire officers and building control inspectors prior to finalising specifications. All panic bars now sold in Europe must conform to the latest CE Regulations Each panic bar kit comes complete with certificate of approval.

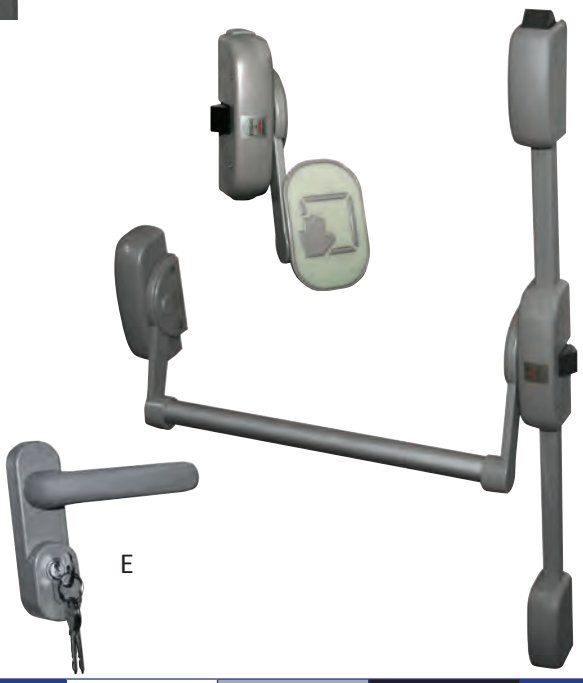

	DESCRIPTION	WHITE	SILVER	BLACK	BOX QTY.
A	3 Point Panic Latch Set (Master) Includes: push bar, 2 x pullman rod covers, 2 x rods, 2 x side or vertical pullman, 2 x pullman covers, accessory pack inc screws, idler, and 1 centre mechanism.	PAN3570325	PAN3570320	PAN35703201	1
B	3 Point Panic Bolt Set (Slave) Includes: push bar, 2 x pullman rod covers, 2 x rods, 2 x side or vertical pullman, 2 x pullman covers, accessory pack inc screws, idler, and 1 centre mechanism.	PAN3550325	PAN3550320	PAN355030	1
C	3 Point Push Pad Reversible (Master) Includes: push pad, 2 x pullman rod covers, 2 x rods, 2 x side or vertical pullman, 2 x pullman covers, accessory pack inc screws, idler, and 1 centre mechanism.	PAN3580325	PAN3580320	-	1
D	3 Point Push Pad Reversible (Slave) Includes: push pad, 2 x pullman rod covers, 2 x rods, 2 x side or vertical pullman, 2 x pullman covers, accessory pack inc screws, idler, and 1 centre mechanism.	PAN3560325	PAN3560320	-	1
E	Outside Access Kit Includes: lever handle, cylinder,3 keys, fixing screws, assembly instructions and drilling templates	PAN3610125	PAN3610120	PAN3610101	1

NB. Frame keeps are profile related and are supplied separately. For further information, please contact our sales team.

Yale Panic Bars

- A concealed panic bar kit comprising of panic bar and multi-point lock
- Panic bar comes with black covers and a green cross bar
- Door bolt supplied as standard is part number PAD17200SS (single door kit only) see page 162 for full specification
- Panic bar system will work using standard keeps and packers compatible with Lockmaster door bolts
- Concealed panic bars give better compression and higher security than the standard face fixed panic bars
- Outside access kit for the Yale concealed panic bar allows entry via a key once fitted
- Ouside access is key-retaining - once unlocked, the key can't be removed until the door is locked
- 10 year guarantee

	DESCRIPTION	BACK & GREEN	BLACK	BOX QTY.
	Panic Bar Kit - Left Handed (Active) Includes: main mechanism with cover, idler mechanism with cover, cross arm, door lock, one piece keep, and accessory pack.	YPB10000	-	1
	Panic Bar Kit - Right Handed (Active) Includes: main mechanism with cover, idler mechanism with cover, cross arm, door lock, one piece keep, and accessory pack.	YPB10001	-	1
	Panic Bar Kit for French Doors (Active) Includes: master door lock, slave door lock, 2 panic bars, link arm and screw kit, centre keep (1 left handed, 1 right handed), hook and roller keep set, single shootbolt keep set (1 top and 1 bottom), shootbolt set (1 inline and 1 reverse action)	YPB10002	-	1
	Panic Bar Kit for Composite/Ali Doors (Non-handed) Includes: main mechanism with cover, idler mechanism with cover, cross arm, door Lock, 3 piece keep set (non-handed), and an accessory pack	YPB10003	-	1
A	Outside Access Kit Includes: lever handle, cylinder,3 keys, fixing screws,assembly instructions and drilling templates	-	YPB10004	1

NB. These panic bar systems will work using packers that suit the Lockmaster door bolts. For further information, please contact our sales team.

Q
Quality
EN 1125:2008

Omec Emergency Exit Hardware

MADE IN ITALY
OMEC®

- Fabricator-friendly surface mounted design
- Aluminium covers clip over the operating rods to give clean lines & vandalism protection
- Push bar latch mechanism tested to over a million cycles
- Designed and tested according to EN 1125:2008
- Suitable for doors up to 1200mm wide by 2500mm high
- Standard finish: powder coated black with RAL6024 green push bar
- Kit includes strikers to suit most PVCu timber & aluminium doors
- Optional push pad
- Also available external lever handle (fits doors 40-85mm thick)
- Not suitable for doors narrower that 800mm
- Not to be used on fire doors

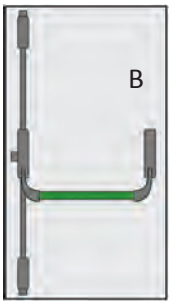

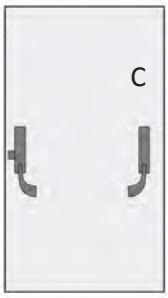

	DESCRIPTION	FINISH	CODE	BOX QTY.
A	3 Point Panic Latch Set (Active) Includes: center latch and striker, green push bar, side latches, side strikers, nylon plugs, fixing screws, assembly instructions and drilling templates	Black with green cross bar	OPB10025	1
B	3 Point Panic Bolt Set (Slave) Includes: center latch and striker, green push bar, top and bottom bolts, side striker, floor striker, nylon plugs, fixing screws, assembly instructions and drilling templates	Black with green cross bar	OPB10035	1
C	Central Latch and Striker Only Includes: side striker, nylon plugs, fixing screws, assembly instructions and drilling templates	Black	OPB62130	1
D	Push Pad Reverseable Oval Includes: photolumenescent insert (sticky back), nylon plugs, fixing screws, assembly instructions	photolumenescent insert	OPB60000	1
E	Omec Outside Access Kit Includes: 3 keys, fixing screws, assembly instructions and drilling templates	Black	OPB20005	1
	Oval Push Bar - 1200mm	Green	OPB31200	1
	Floor Striker	Black	OPB90011	1
	Side Strike - Standard Lip	Black	OPB90051	1
	Side Strike - Medium Lip	Black	OPB90052	1
	Side Strike - Long Lip	Black	OPB90053	1
	Wedge Striker for Aluminium Profiles	Black	OPB90054	1

TYPE	SYMBOL YALE | EUROSPEC
Anti-bump	
Anti-drill	
Anti-pick	
Anti-plug	
Anti-snap	
BS EN	BS EN 1303:2005

TYPE	SYMBOL
Fire Door	FD30/60
Guarantee	
Kitemarked	
Secured By Design	
Security Level	
TS 007 is a standard developed in response to concerns over cylinder attacks. The standard is characterised by a 3 star rating system and can be achieved by combining a 1 star cylinder with 2 star security door furniture or by using a standalone 3 star cylinder.	

SECURITY LEVEL	ANTI-BUMP	ANIT-DRILL	ANTI-PICK	ANTI-PLUG	ANTI-SNAP	BS EN	FIRE DOOR	KITE MARKED STAMPED	SBD	GUARANTEE	BRAND	PAGE
5 Pin						1303:2005					Eurospec	217
											ISEO	217
6 Pin		•	•			1303:2005	•				Eurospec	218
		•	•			1303:2005				2 Years	Yale	219
TS 007 1 Star	•	•	•	•	•	1303:2005	30/60	•			Eurospec	220
	•	•	•		•	1030:2005		•			Yale	221
	•	•	•			1303:2005		•	•	10 Years	Yale	222-223
TS 007 3 Star	•	•	•		•	1303:2005		•		10 Years	Yale	224-225

Measuring a Profile Cylinder

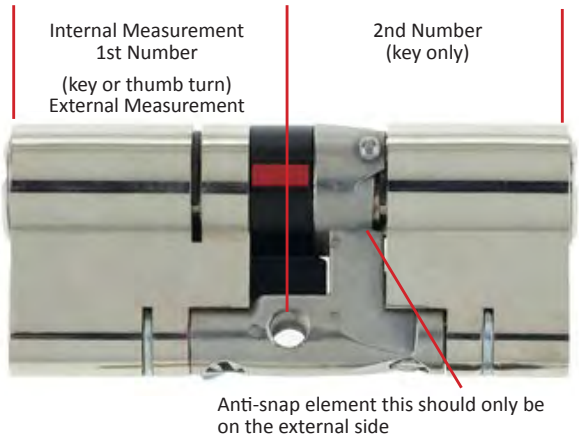

Please Note: Most cylinders can be reversed, but if they include an anti-snap part this should always be on the external size.
See the image on the left of the Yale TS 007 3 Star Platinum Profile cylinder

the internal measurement is the 1st number, the external measurementt is the 2nd number, ie. 40/50 = 40 internal / 50 external

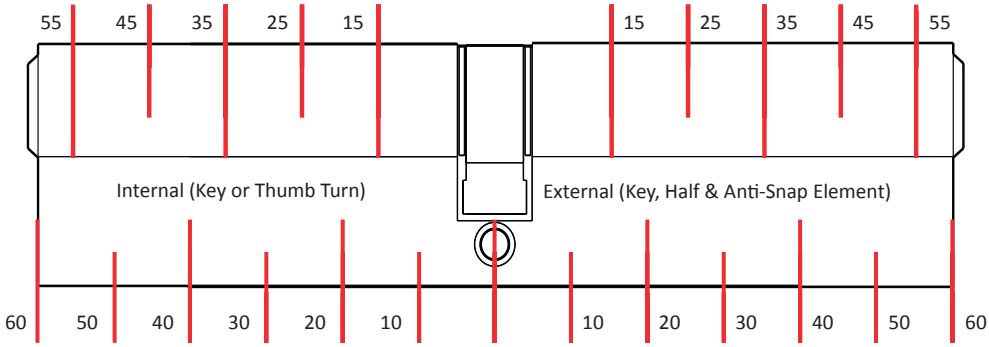

All dimensions are in mm

PROFILE CYLINDER TYPE	PAGE
Key/Key	217-222, 224-225
Key/Half	217-218,
Thumb Turn/Key	217-221, 223-225
Key/Key Keyed-alike	217-222, 224-225

Looking for keyed-alike or master suited sets? Just call sales and we'll be happy to help!

Example of master key suite

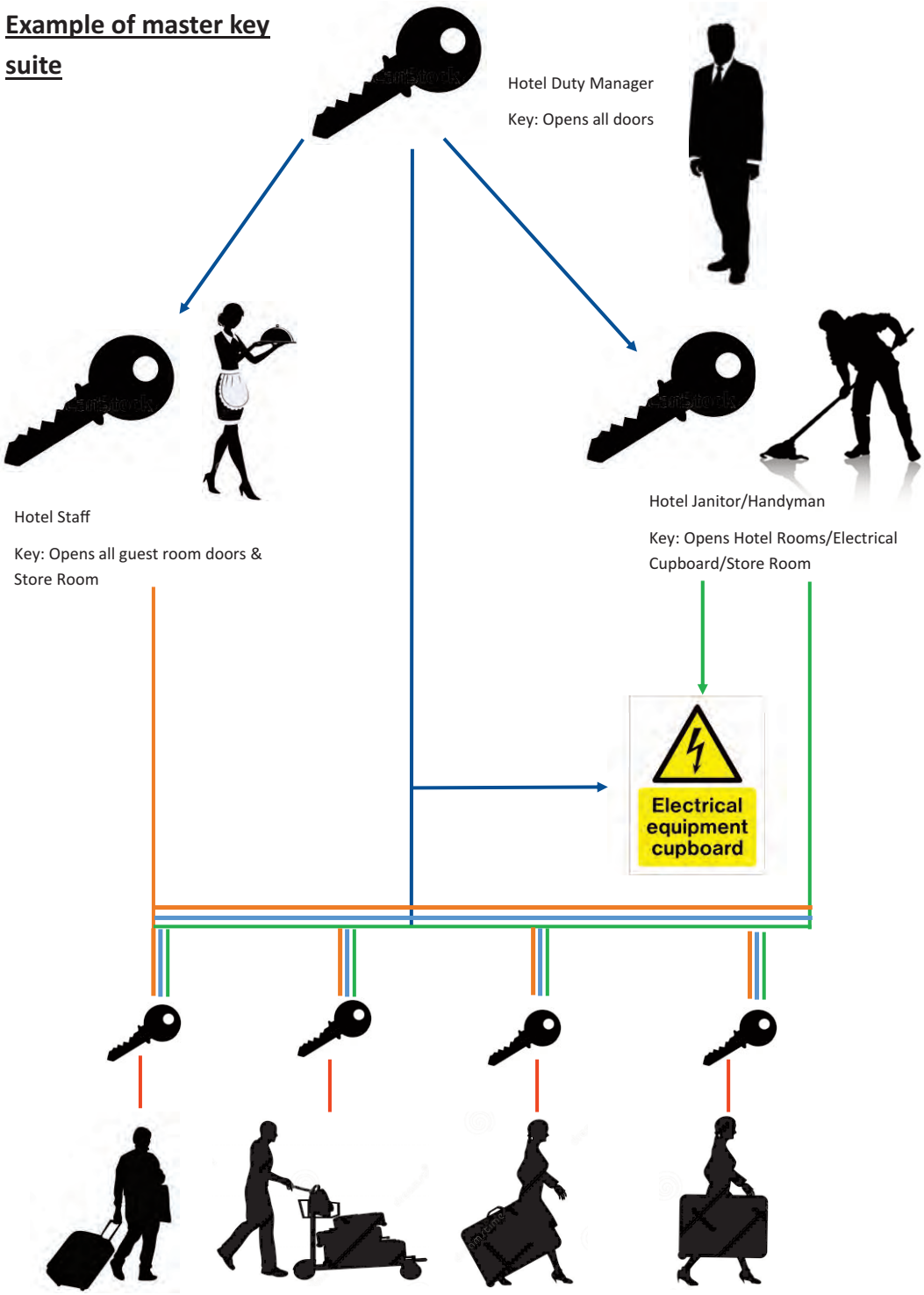

5 Pin Key/Key, Key/Half & Thumb Turn/Key Profile Cylinders

EUROSPEC

BS EN 1303:2005

- Five pin, anti-drill, anti–pick cylinders conforming to security grade 6 of BS EN 1303
- Available in brass and chrome
- Keyed–alike quantities and master–suites available to special order (please contact our sales office for further information)
- Complete with 3 keys and a fixing screw

SIZE mm	CHROME	BRASS	BOX QTY.
5 Pin Key/Key Profile Cylinders			
35/35	CYL535351	CYL535353	25
35/45	CYL535451	CYL535451	25
40/50	CYL540501	CYL540503	25
45/50	CYL545501	CYL545503	25
45/55	CYL545551	CYL545553	25
50/50	CYL550501	CYL550503	25
5 Pin Thumb Turn/Key Profile Cylinders			
35/35	CYL535352	CYL535354	25
45/55	CYL545552	CYL545554	25
50/50	CYL550502	CYL550504	25
5 Pin Key/Key Keyed-alike Profile Cylinder Pairs			
45/50	CYP545501	CYP545503	10 pairs
45/55	CYP545551	CYP545553	10 pairs
50/50	CYP550501	CYP550503	10 pairs

5 Pin Key/Half Profile Cylinders

ISEO

SIZE mm	NICKEL	BRASS	BOX QTY.
5 Pin Key/Half Profile Cylinders			
25/10	CYL110251	-	10
30/10	CYL110301	CYL110303	10
35/10	CYL110351	CYL110353	10
40/10	CYL110401	CYL110403	10
45/10	CYL110451	-	10
50/10	CYL110501	CYL110503	10
55/10	CYL110551	-	10
70/10	CYL110701	CYL110703	10

For more sizes and variants please check our website: www.windowware.co.uk

5 Pin Key/Key & Thumb Turn/Key Profile Cylinders

ISEO

- Five pin range of cylinders
- Anti–pick pins as standard
- Nickel or brass finishes as standard
- 3 keys per cylinder and a fixing screw

SIZE mm	NICKEL	BRASS	BOX QTY.
5 Pin Key/Key Profile Cylinders			
25/25	CYL125251	CYL125253	10
28/28	CYL128281	CYL128283	10
30/30	CYL130301	CYL130303	10
30/50	CYL130501	CYL130503	10
35/35	CYL135351	CYL135353	10
35/40	CYL130401	CYL130403	10
35/45	CYL135451	CYL135453	10
35/50	CYL135501	CYL135503	10
35/55	CYL135551	CYL135553	10
35/65	CYL135651	-	10
40/40	CYL140401	CYL140403	10
40/45	CYL140451	CYL140453	10
40/50	CYL140501	CYL140503	10
40/55	CYL140551	CYL140553	10
40/60	CYL140601	CYL140603	10
45/45	CYL145451	CYL145453	10
45/50	CYL145501	CYL145503	10
45/55	CYL145551	CYL145553	10
50/50	CYL150501	CYL150503	10
50/55	CYL150551	CYL150553	10
50/60	CYL150601	CYL150603	10
5 Pin Thumb Turn/Key Profile Cylinders			
30/30	CYL130302	CYL130304	10
35/35	CYL135352	CYL135354	10
35/45	CYL135452	CYL135454	10
35/55	CYL135552	CYL135554	10
40/40	CYL140402	CYL140404	10
40/45	CYL140452	CYL140454	10
40/50	CYL140502	CYL140504	10
40/60	CYL140602	CYL140604	10
45/35	CYL145352	CYL145354	10
45/45	CYL145452	CYL145454	10
45/50	CYL145502	CYL145504	10
45/55	CYL145552	CYL145554	10
50/40	CYL150402	CYL150404	10
50/45	CYL150452	CYL150454	10
50/50	CYL150502	CYL150504	10
55/35	CYL155352	-	10

6 Pin Key/Key, Key/Half & Key/Key Keyed-alike Profile Cylinders

- Six pin, anti-drill, anti–pick cylinders conforming to security Grade 6 of BS EN 1303
- Available in polished brass and polished chrome
- Complete with 3 keys and a fixing screw

Anti-drill Anti-pick BS EN 1303:2005

SIZE mm	CHROME	BRASS	BOX QTY.
6 Pin Key/Key Profile Cylinders			
30/30	CYL730301	CYL730303	25
35/35	CYL735351	CYL735353	25
35/40	CYL735401	CYL735403	25
35/45	CYL735451	CYL735453	25
35/55	CYL735551	CYL735553	25
40/40	CYL740401	CYL740403	25
40/45	CYL740451	CYL740453	25
40/50	CYL740501	CYL740503	25
40/55	CYL740551	CYL740553	25
40/60	CYL740601	CYL740603	25
45/45	CYL745451	CYL745453	25
45/50	CYL745501	CYL745503	25
45/55	CYL745551	CYL745553	25
50/50	CYL750501	CYL750503	25
6 Pin Key/Half Profile Cylinders			
35/10	CYL710351	CYL710353	25
40/10	CYL710401	CYL710403	25
45/10	CYL710451	CYL710453	25
50/10	CYL710501	CYL710503	25
55/10	CYL710551	CYL710553	25
6 Pin Key/Key Keyed-alike Profile Cylinders Pairs			
35/35	CYP735351	CYP735353	10 pairs
40/50	CYP740501	CYP740503	10 pairs
40/60	CYP740601	CYP740403	10 pairs
45/50	CYP745501	CYP745503	10 pairs
45/55	CYP745551	CYP745553	10 pairs
50/50	CYP750501	CYP750503	10 pairs

6 Pin Thumb Turn/Key Profile Cylinders

- Ideal for fire doors
- Six pin, anti-drill, anti–pick cylinders conforming to security Grade 6 of BS EN 1303
- Available in polished brass and polished chrome
- Complete with 6 keys and 2 fixing screws

Anti-drill Anti-pick BS EN 1303:2005

SIZE mm	CHROME	BRASS	BOX QTY.
6 Pin Thumb Turn/Key Profile Cylinders			
35/35	CYL735352	CYL735354	25
35/45	CYL735452	CYL735454	25
35/55	CYL735552	CYL735554	25
40/40	CYL740402	CYL740404	25
40/45	CYL740452	CYL740454	25
40/50	CYL740502	CYL740504	25
40/55	CYL740552	CYL740554	25
40/60	CYL740602	CYL740604	25
45/35	CYL745352	CYL745354	25
45/45	CYL745452	CYL745454	25
45/50	CYL745502	CYL745504	25
45/55	CYL745552	CYL745554	25
50/40	CYL750402	CYL750404	25
50/45	CYL750452	CYL750454	25
50/50	CYL750502	CYL750504	25
55/45	CYL755452	CYL755454	25

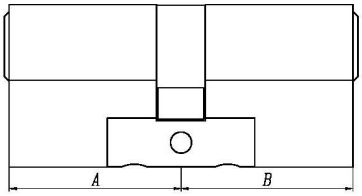

2 YEAR GUARANTEE

Anti-drill Anti-pick BS EN 1303:2005

6 Pin Key/Key & Thumb Turn/Key Profile Cylinders

- Tested to the British Standard BS EN 1303:2005
- Available in brass or chrome
- Complete with 3 keys and a fixing screw
- 2 year guarantee
- Key/key or thumb turn/key versions
- Keyed-alike quantities and master-suites available to special order (please contact our Sales Office for further information)

NICKEL BRASS

SIZE mm	CHROME	BRASS	BOX QTY.
6 Pin Key/Key Profile Cylinders			
35/35	CYL635351	CYL635353	10
35/40	CYL635401	CYL635403	10
35/45	CYL635451	CYL635453	10
40/40	CYL640401	CYL640403	10
40/45	CYL640451	CYL640453	10
40/50	CYL640501	CYL640503	10
40/55	CYL640551	CYL640553	10
45/45	CYL645451	CYL645453	10
45/50	CYL645501	CYL645503	10
45/55	CYL645551	CYL645553	10
50/50	CYL650501	CYL650503	10
6 Pin Key/Thumb Turn Profile Cylinders			
35/35	CYL635352	CYL635354	10
40/50	CYL640502	CYL640504	10
45/55	CYL645552	CYL645554	10
50/50	CYL650502	CYL650504	10

SIZE mm	CHROME	BRASS	BOX QTY.
6 Pin Key/Key Keyed-alike Profile Cylinders			
40/40	CYP640401	CYP640403	5 pairs
40/50	CYP640501	CYP640503	5 pairs
45/50	CYP645501	CYP645503	5 pairs
45/55	CYP645551	CYP645553	5 pairs
50/50	CYP650501	CYP650503	5 pairs
6 Pin Key/Thumb Turn Keyed-alike Profile Cylinders			
50/50	CYP650502	-	10

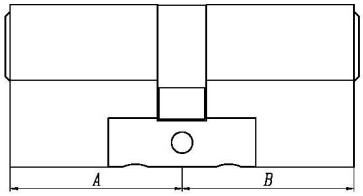

Eurospec MPX6 1 Star Kitemarked Profile Cylinder

TS 007 1 approved

BS EN 1303:2005

FD30/60

- Anti-bump/Anti-snap kitemarked cylinder
- TS 007 1 star approved - TS 007:2012
- Supplied with 3 keys
- Available from stock in key/key and keyed-alike pairs with master suiting available on special order basis
- Snap off (Sacrificial) front section, anti-snap one side on even split cylinders, both sides of unequal sized cylinders - Non-handed product.
- Suitable for use on fire doors to 60mins
- Tested to to BS EN 1303:2005, EN 1634 Part 1:2000
- Anti-drill
- Anti-snap
- Anti-plug Pull
- Anti-pick
- Anti-pump
- For PAS 24 requirements this cylinder must be fitted with a PAS 24 door handle.

Additional Information

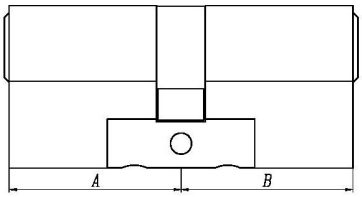

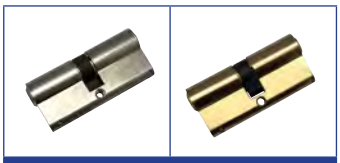

CHROME BRASS

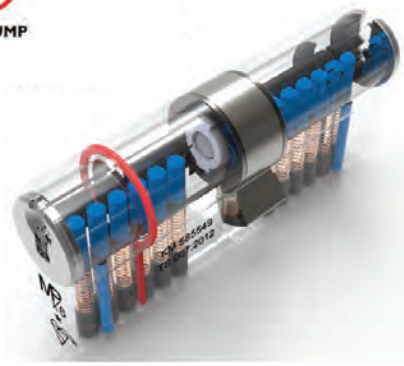

SIZE mm	CHROME	BRASS	BOX QTY.
6 Pin Anti-bump/Anti-snap Key/Key Profile Cylinders			
35/35	CYL435351	CYL435353	10
40/40	CYL440401	CYL440403	10
40/50	CYL440501	CYL440503	10
40/60	CYL440601	CYL440603	10
45/45	CYL445451	CYL445453	10
45/50	CYL445501	CYL445503	10
45/55	CYL445551	CYL445553	10
50/50	CYL450501	CYL450503	10

SIZE mm	CHROME	BRASS	BOX QTY.
6 Pin Anti-bump/Anti-snap Key/Thumb Turn Profile Cylinders			
40/60	CYL440602	CYL440604	10
50/50	CYL450502	CYL450504	10
6 Pin Anti-bump/Anti-snap Key/Key Keyed-alike Profile Cylinders			
50/50	CYP450501	CYP450503	5 pairs

Yale TS 007 1 Star Superior Kitemarked Profile Cylinder

Superior has acheived the following BS EN 1030:2005 8 digit classification: 16000C62 TS 007 is a new standard introduced to try to combat the problem of lock snapping. When trying to replace or upgrade the security to TS 007 you must ensure that you reach the 3 star maximum rating. This can be achieved by using the relevant hardware that carries a star rating and can be used in any combination together to create a 3 star rating. The Hoppe Secured By Design handle has a 2 star rating, you can get a 3 star rating by using this cylinder which is a 1 star anti-bump, anti-snap cylinder.

- Sacrificial cut
- Resistance to bumping
- Resistance to picking
- Resistance to drilling
- 12 Telescopic pin tumbler system
- 3 keys as standard
- 4 anti-pick pins per side
- Patented anti-snap & anti-bump features
- Tested to the highest grade of BS EN 1303:2005 standard
- Fully approved by BSI and Kitemarked
- Available in polished chrome and brass

Additional Information

Anti-drill Anti-pick Anti-snap Anti-bump

MAXIMUM
Security Level

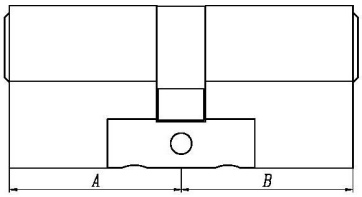

NICKEL BRASS

SIZE mm	CHROME	BRASS	BOX QTY.
6 Pin Anti-bump/Anti-snap Key/Key Profile Cylinders			
35/35	CYL835351	CYL835353	20
40/40	CYL840401	-	20
40/50	CYL840501	CYL840503	20
40/55	CYL840551	CYL840553	20
45/45	CYL845451	CYL845453	20
45/50	CYL845501	CYL845503	20
45/55	CYL845551	CYL845553	20
50/50	CYL850501	CYL850503	20

SIZE mm	CHROME	BRASS	BOX QTY.
6 Pin Anti-bump/Anti-snap Key/Thumb Turn Profile Cylinders			
35/35	CYL835352	CYL835354	20
45/50	CYL845502	CYL845504	20
6 Pin Anti-bump/Anti-snap Key/Key Keyed-alike Profile Cylinders			
35/35	CYP835351	CYP835353	10 pairs
40/40	CYP840401	CYP840403	10 pairs
40/50	CYP840501	CYP840503	10 pairs
45/45	CYP845451	CYP845453	10 pairs
45/50	CYP845501	CYP845503	10 pairs
45/55	CYP845551	CYP845553	10 pairs
50/50	CYP850501	CYP850503	10 pairs

Yale KM Superior 1 Star Kitemarked Key/Key Profile Cylinder

The Yale KM Superior euro profile cylinder has been developed to provide resistance against common cylinder attack methods. The KM Superior offers British Kitemarked TS 007:2014 1 star security and has been tested to the British Standard BS EN 1303:2005. Suitable as a replacement product on PVCu, wood and composite doors this cylinder is Secured by Design approved and recommended for use on doors that require a high level of security and attack protection.

- Replacement 6 pin euro profile cylinder
- Available in euro single and euro turn
- BSI Kitemark approved - KM 532920
- TS 007 1 star cylinder
- Secured by Design approved
- High security level
- 10 year guarantee

Additional Information

Anti-drill | Anti-pick | Anti-bump | Security Level

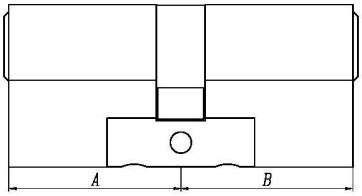

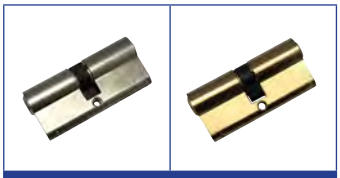

CHROME | BRASS

SIZE mm	CHROME	BRASS	BOX QTY.
TS 007 1★ Key/Key Profile Cylinders			
35/35	CYL335351	CYL335353	10
35/45	CYL335451	-	10
40/40	CYL340401	-	10
45/50	CYL345501	CYL345503	10
45/55	CYL345551	CYL345553	10
50/50	CYL350501	CYL350503	10

SIZE mm	CHROME	BRASS	BOX QTY.
TS 007 1★ Key/Key Keyed-alike Profile Cylinders			
35/35	CYP335351	-	5 pairs
35/45	CYP335451	-	5 pairs
40/40	CYP340401	-	5 pairs
45/50	CYP345501	-	5 pairs
50/50	CYP350501	-	5 pairs

TS 007 1 approved

10 YEAR GUARANTEE

SBD Approved

Yale KM Superior 1 Star Kitemarked Thumb Turn Profile Cylinder

The Yale KM Superior euro profile cylinder has been developed to provide resistance against common cylinder attack methods. The KM Superior offers British Kitemarked TS 007:2014 1 star security and has been tested to the British Standard BS EN 1303:2005. Suitable as a replacement product on PVCu, wood and composite doors this cylinder is Secured by Design approved and recommended for use on doors that require a high level of security and attack protection.

- Replacement 6 pin euro profile cylinder
- Available in euro single and euro turn
- BSI Kitemark approved - KM 532920
- TS 007 1 star cylinder
- Secured by Design approved
- High security level
- 10 year guarantee

Additional Information

Anti-drill | Anti-pick | Anti-bump | Security Level

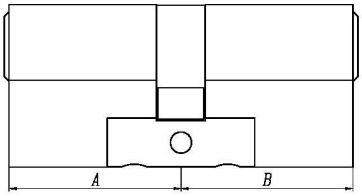

CHROME | BRASS

SIZE mm	CHROME	BRASS	BOX QTY.
TS 007 1★ Key/Thumb Turn Profile Cylinders			
35/35	CYL335352	CYL335354	10
40/40	CYL340402	-	10
45/45	CYL345452	-	10
45/50	CYL345502	CYL345504	10
50/45	CYL350452	CYL350454	10
50/50	CYL350502	CYL350504	10

Yale TS 007 3 Star Platinum Kitemarked Profile Cylinder

BS EN 1303:2005

The Yale Platinum 3 star euro profile cylinder has been independently tested by The British Standards Institution and awarded the BSI Kitemark TS 007:2014 3 star accreditation. That makes this cylinder the perfect choice for professionals in need of a proven, high-security solution capable of providing maximum defence against common methods of cylinder attack.

- Anti-snap, sacrificial front section
- Anti-pick, anti-bump, anti-screw, anti-pull and anti-drill
- Superior strength with cylinder stability system for superior protection
- Horizontal keyway
- Flat reversible dimple key with new stylish nylon key bow
- Key card for easy code identification and key duplication
- Available in standard key/key, thumb turn and keyed-alike in pairs. Brass and Nickel finishes
- TS 007:2014 3 star approved
- BS EN 1303:2005 approved
- KM 559658

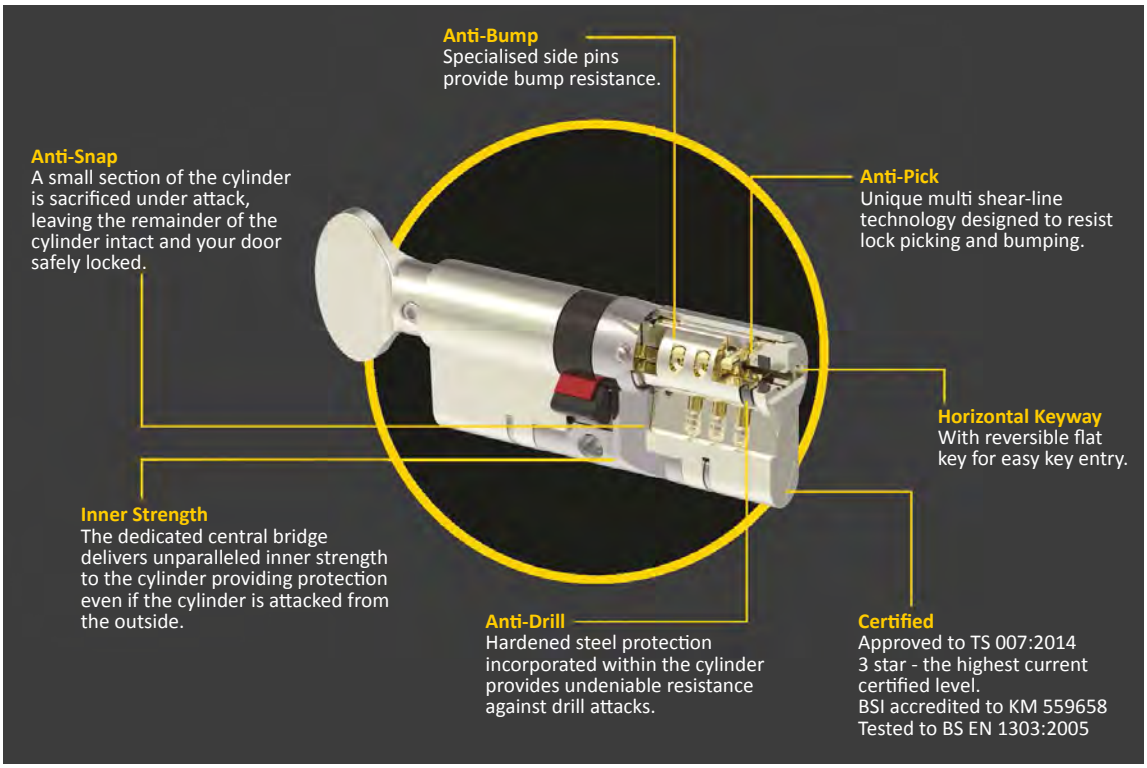

Additional Info

Anti-drill Anti-pick Anti-snap Anti-bump

Security Level

Yale TS 007 3 Star Platinum Kitemarked Profile Cylinder

Please Note: 'SIZE mm' column, the **in**ternal measurment is the **1st** number, the **ex**ternal measurment is the **2nd** number, ie. 40/50 = **40 in**ternal / **50 ex**ternal

Internal measurment 1st number (key or thumb turn)

External measurment 2nd number (key only)

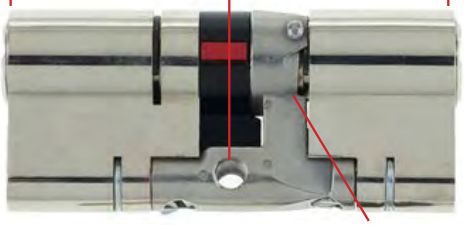

Anti-Snap element this should only be on the external side

SIZE mm	CHROME	BRASS	BOX QTY.
TS 007 3★ Profile Cylinders			
35/35	CYL935351	CYL935353	20
35/45	CYL935451	CYL935453	20
35/55	CYL935551	CYL935553	20
40/40	CYL940401	CYL940403	20
40/45	CYL940451	CYL940453	20
40/50	CYL940501	CYL940503	20
40/55	CYL940551	CYL940553	20
45/35	CYL945351	CYL945353	20
45/40	CYL945401	CYL945403	20
45/45	CYL945451	CYL945453	20
45/50	CYL945501	CYL945503	20
45/55	CYL945551	CYL945553	20
50/40	CYL950401	CYL950403	20
50/45	CYL950451	CYL950453	20
50/50	CYL950501	CYL950503	20
55/40	CYL955401	CYL955403	20
55/45	CYL955451	CYL955453	20
60/40	CYL960401	CYL960403	20
TS 007 3★ Thumb Turn Profile Cylinders			
35/35	CYL935352	CYL935354	20
40/40	CYL940402	CYL940404	20
40/50	CYL940502	CYL940504	20
45/45	CYL945452	CYL945454	20
45/50	CYL945502	CYL945504	20
45/55	CYL945552	CYL945554	20
50/40	CYL950402	CYL950404	20
50/45	CYL950452	CYL950454	20
50/50	CYL950502	CYL950504	20
55/45	CYL955452	CYL955454	20
TS007 3★ Key/Key Keyed-alike Profile Cylinders			
35/35	CYP935351	CYP935353	10 pairs
40/40	CYP940401	CYP940403	10 pairs
40/50	CYP940501	CYP940503	10 pairs
40/55	CYP940551	-	10 pairs
45/45	CYP945451	CYP945453	10 pairs
45/50	CYP945501	CYP945503	10 pairs
50/40	CYP950401	CYP950403	10 pairs
50/45	CYP950451	CYP950453	10 pairs
50/50	CYP950501	CYP950503	10 pairs
55/40	CYP955401	CYP955403	10 pairs
55/45	CYP955451	CYP955453	10 pairs

TS 007:2014

TS 007 is a standard developed in response to concerns over cylinder attacks. The standard is characterised by a 3 star rating system and can be achieved by combining a 1 star cylinder with 2 star security door furniture or by using a standalone 3 star cylinder. The Platinum series cylinder is approved to TS 007 3 stars and does not require any additional security furniture.

Maintenance and care of your Yale cylinder

Yale recommend regular lubrication of your Yale cylinder locks to ensure continuous trouble-free performance and operation.

For this we recommend using a PTFE-based lubricant. A small amount of lubricant should be applied to the key and then inserted into the cylinder. Rotate the key a couple of times in line with the normal locking function. Remove the key from the cylinder and wipe away any remaining lubricant to ensure it isn't transferred onto other objects.

High Security Cylinder Pull

- TS 007 2 star accredited
- Sacrificial break point defends against common attack methods
- Compatible with Yale's Lockmaster KeyTurn multipoint door lock
- 10 year guarantee
- 500 hours corrosion tested to BS EN 1670 Grade 5
- Document Q approved when used as part of a PAS 24 door set

PVD BRASS	PVD CHROME	SATIN CHROME	BOX QTY.
YCP10008	YCP10002	YCP10001	20

Cylinder Guard

- Cylinder guards sit underneath the external handle and surrounds the cylinder
- Prevents cylinders from attack and manipulation if the handle is removed

PART CODE	BOX QTY.
PCG00519	100

Escutcheon Plate

- Suitable for use on PVCu, aluminium and timber applications
- Packaged in complete sets of two covers and two fixing plates

WHITE	CHROME	PVD GOLD	BLACK	BOX QTY.
ESC80000	ESC80001	ESC80009	ESC80005	5

Supa™ Stainless Steel Escutcheon & Pull Escutcheon

Boasting the same superior surface finish guarantees as the rest of the Supa™ range, these ultra-corrosion resistant stainless-steel escutcheons are most definitely made to last. The Supa™ Secure, Supa™ Secure pull and Supa™ pull variants are made from resilient grade 304 stainless steel, while the Supa™ standard version is even tougher in marine grade 316. That guarantees these escutcheons will be looking great for years to come, whether they're fitted on doors in the heart of the city or right by the sea!

- Three escutcheon designs available
- Suitable for PVCu, composite, aluminium and timber doors
- Clever design features such as clip-on covers conceal screw fixings for a neat finish
- The security versions are Secured by Design accredited, BSI Kitemarked and CE marked to visually deter burglars and resist forced entry
- Security escutcheons also have chamfered anti-grip shoulders, so burglars can't get leverage and an anti-drill design to protect the cylinder from attack

Secure Escutcheon

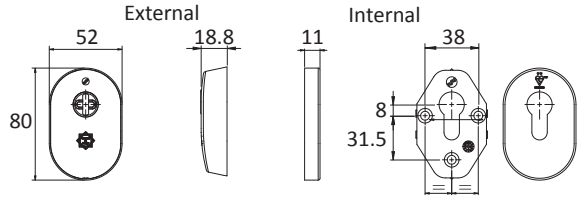

Secure Pull Escutcheon

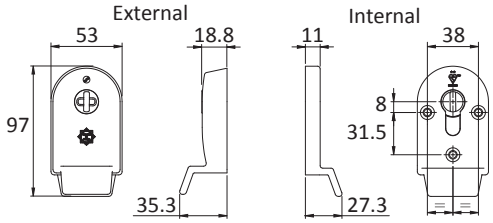

Standard Pull Escutcheon

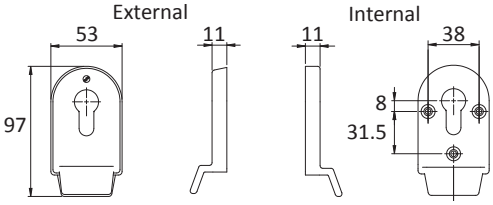

DESCRIPTION	TYPE	TS 007 APPROVED	STAINLESS STEEL GRADE	SIZE	BRUSHED STAINLESS	POLISHED PVD GOLD STAINLESS	POLISHED STAINLESS
Supa Escutcheon	Secure	2 Star	304	52 x 80mm	ESC50001	-	-
Supa Escutcheon	Standard	-	304	52 x 80mm	ESC53001	-	-
Supa Pull Escutcheon	Secure	2 Star	304	53 x 97mm	ESC51001	ESC51008	ESC51002
Supa Pull Escutcheon	Standard	-	304	53 x 97mm	ESC52001	ESC52008	ESC52002

Supa™ D-shaped Stainless Steel Pull Bar Door Handle

Take the strain out of opening heavy doors in both commercial and domestic properties with the super strong, super stylish Supa™ D-shaped pull door handle from Mila. Made from corrosion-resistant stainless steel, with long-lasting 25-year mechanical and surface finish guarantees, these pull door handles will go the distance.

- Modern design to enhance all types of doors including, composite, aluminium & timber
- Functional brushed stainless steel finish banishes finger prints
- Universal application for left- and right-handed doors
- Handle can be fitted two different ways with the Supa™ fixing kits (sold separately)
- Choose from through fix or back-to-back inline fix
- Manufactured from high-quality 304 grade stainless steel
- Bar length: 330mm

Fixing Options

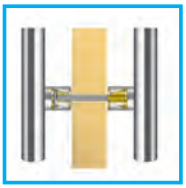

Back-to-back Inline Fix
MPH573310

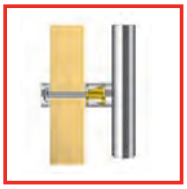

Through Fix
MPH573302

How many fixing kits do you need?
The fixing kits for the Supa™ stainless steel door pull handle range come in pairs.
For the D-shaped Pull Bar door handle you'll need one pair.

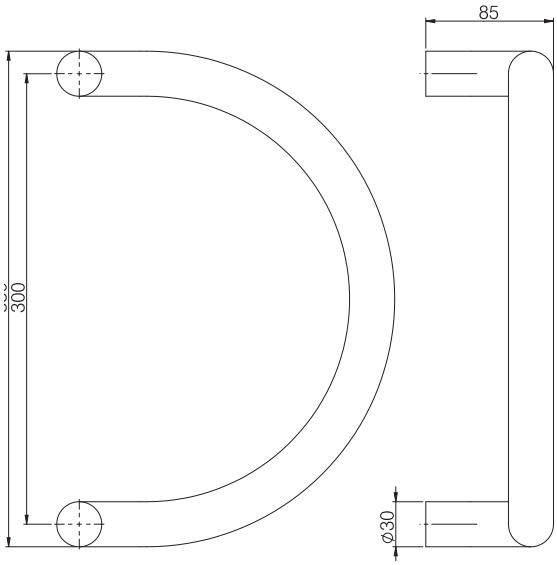

DESCRIPTION	SHAPE	STAINLESS STEEL GRADE	COVER CAP DIA	BAR LENGTH	FIXINGS	BRUSHED STAINLESS
Supa Pull Bar	D-shaped	304	-	330mm	2	MPH573202
Through Fix Kit	-	-	30mm	-	2 per kit	MPH573302
Back-to-back Inline Fix Kit	-	-	30mm	-	2 per kit	MPH573310

Supa™ V-shaped Stainless Steel Pull Bar Door Handle

Looking for an eye-catching yet durable pull handle for a door? This stylish stainless steel v-shaped pull handle from the Mila Supa™ range is robust enough to work on both interior and exterior entrances, adding class and more 'grasp' to any composite, aluminium and timber door.

- Softly-curved V-shaped pull door handle to enhance all types of doors
- Brushed stainless steel finish won't show fingerprints
- Suits both left- and right-handed doors
- Handle can be fitted two different ways with the Supa™ fixing kits (sold separately)
- Choose from through fix or back-to-back inline fix
- Constructed from high-quality 304 grade stainless steel for unbeatable corrosion resistance
- Bar length 330mm

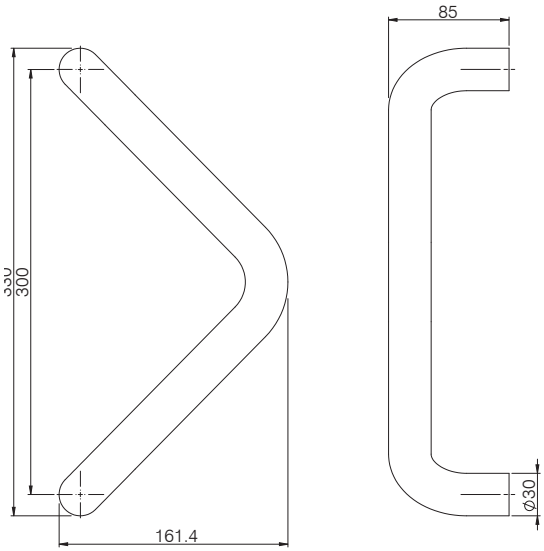

Fixing Options

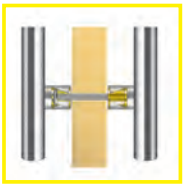

Back-to-back Offset Fix
MPH573315

Through Fix
MPH573302

How many fixing kits do you need?
The fixing kits for the Supa™ stainless steel door pull handle range come in pairs.
For the V-shaped Pull Bar door handle you'll need one pair.

DESCRIPTION	SHAPE	STAINLESS STEEL GRADE	COVER CAP DIA	BAR LENGTH	FIXINGS	BRUSHED STAINLESS
Supa Pull Bar	V-shaped	304	-	330mm	2	MPH573212
Through Fix Kit	-	-	30mm	-	2 per kit	MPH573302
Back-to-back Inline Fix Kit	-	-	30mm	-	2 per kit	MPH573310

Supa™ Bow-shaped Stainless Steel Pull Bar Door Handle

Pull open any door in style and comfort with this stainless steel bow-shaped pull door handle from Mila. The rounded, tubular bar is designed to fit perfectly in the hand during use for a firm, smooth grip. It's made from high-grade stainless steel to give excellent strength and corrosion resistance.

- Gentle bow shape pull door handle for composite, aluminium and timber doors
- Brushed stainless steel finish – resists fingerprints!
- Fits both left- and right-handed doors
- Handle can be fitted three different ways with the Supa™ fixing kits (sold separately)
- Choose from through fix, concealed fix or back-to-back inline fix
- Constructed from high-quality 304 grade stainless steel for high levels of corrosion resistance
- Bar length: 588mm

Fixing Options

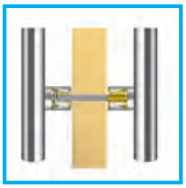

Back-to-back Inline Fix
MPH573310

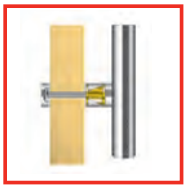

Through Fix
MPH573302

Concealed Fix
MPH573320

How many fixing kits do you need?
The fixing kits for the Supa™ stainless steel door pull handle range come in pairs.
For the Bow Pull Bar door handle, you'll need to buy one fixing kit.

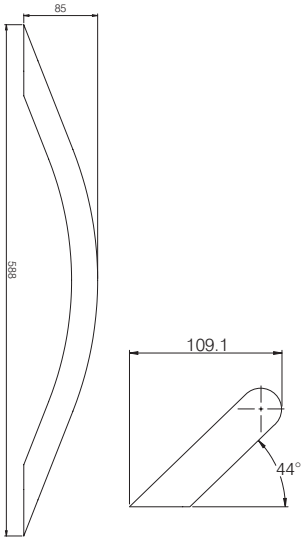

DESCRIPTION	SHAPE	STAINLESS STEEL GRADE	BAR LENGTH	FIXINGS	BRUSHED STAINLESS
Supa Pull Bar	Bow-shaped	304	588mm	2	MPH573222

FIX TYPE	COVER CAP DIA	FIXINGS	PART CODE
Through Fix Kit	30mm	2 per kit	MPH573302 (**BRUSHED STAINLESS**)
Back-to-back Inline Fix Kit	30mm	2 per kit	MPH573310
Concealed Fix Kit	-	2 per kit	MPH573320

Supa™ Stainless Steel Pull Door Knob

The hardiest piece of hardware in the Mila Supa™ pull handle range, this classic door knob is made of 316 marine grade stainless steel as standard, capable of resisting rust, corrosion and surface pitting even in extreme conditions.

- Made from highly corrosion-resistant 316 marine grade stainless steel – an ideal choice for properties in coastal regions or polluted environments.
- Brushed finish requires less effort to keep clean
- Door knob can be fitted with the Supa™ through fix fixing kit (sold separately)
- 70mm diameter
- Projects 68mm from door surface

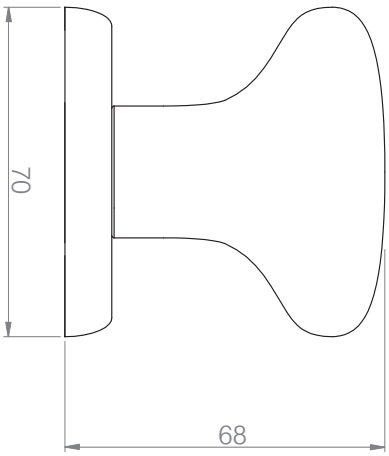

Fixing Options

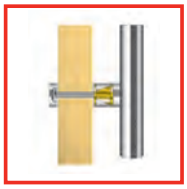

Through Fix
MPH573302

How many fixing kits do you need?
The fixing kits for the Supa™ stainless steel door pull handle range come in pairs, so one fixing kit is sufficient to fit two door knobs.

DESCRIPTION	STAINLESS STEEL GRADE	COVER CAP DIA	KNOB DIA	FIXINGS	BRUSHED STAINLESS
Supa Door Knob	316	-	70mm	1	MPH574002
Through Fix Kit	-	30mm	-	2 per kit	MPH573302

MILA Quality & service | It's in our DNA

Supa™ Inline Stainless Steel Pull Bar Door Handle

STAINLESS SURFACE FINISH 25 years GUARANTEE

This stainless steel pull door handle from Mila epitomises quality, from the 25-year mechanical and surface finish guarantees, to the resilient stainless steel construction and neat, modern styling. A great handle choice that will look fabulous and function perfectly for years to come.

- 8 different handle lengths to suit any door available from 400mm to 1800mm
- Stylish and practical brushed stainless steel finish won't show finger marks
- Fits both left- and right-handed doors
- Handle can be fitted three different ways with the Supa™ fixing kits (sold separately)
- Choose from through fix, concealed fix or back-to-back inline fix
- Suitable for composite, aluminium and timber doors
- Manufactured from 304 grade stainless steel

Fixing Options

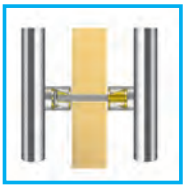

Back-to-back Inline Fix
MPH573310

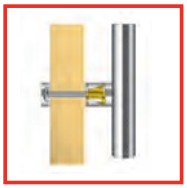

Through Fix
MPH573302

Concealed Fix
MPH573320

How many fixing kits do you need?
The fixing kits for the Supa™ stainless steel door pull handle range come in pairs.
That means one fixing kit is sufficient to fit an inline bar Supa™ pull handle up to 1200mm long, which has two fixing points. For Supa™ inline pull bar handles 1400mm or longer which have three fixing points, you'll need to buy two fixing kits.

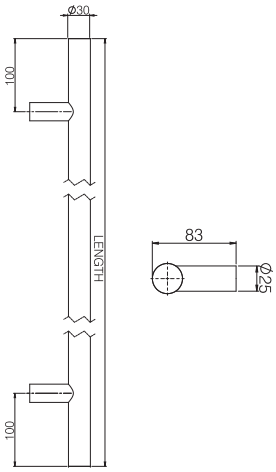

DESCRIPTION	TYPE	STAINLESS STEEL GRADE	BAR LENGTH	FIXINGS	NO. OF FIXING KITS REQUIRED	BRUSHED STAINLESS
Supa Pull Bar	Inline	304	400mm	2	1	MPH573102
Supa Pull Bar	Inline	304	600mm	2	1	MPH573112
Supa Pull Bar	Inline	304	800mm	2	1	MPH573122
Supa Pull Bar	Inline	304	1000mm	2	1	MPH573132
Supa Pull Bar	Inline	304	1200mm	2	1	MPH573142
Supa Pull Bar	Inline	304	1400mm	3	2	MPH573152
Supa Pull Bar	Inline	304	1600mm	3	2	MPH573162
Supa Pull Bar	Inline	304	1800mm	3	2	MPH573172

FIX TYPE	COVER CAP DIA	FIXINGS	PART CODE
Through Fix Kit	30mm	2 per kit	MPH573302 (**BRUSHED STAINLESS**)
Back-to-back Inline Fix Kit	30mm	2 per kit	MPH573310
Concealed Fix Kit	-	2 per kit	MPH573320

Supa™ Offset Stainless Steel Pull Bar Door Handle

With mechanical and finish guarantees that last a quarter of a century, as well as proven strength and undeniable good looks, this stainless steel offset pull bar door handle from the Mila Supa™ range is an excellent choice for quality aficionados.

- 8 handle lengths to suit your needs (400mm to 1800mm)
- Elegant design to enhance composite, aluminium and timber doors
- Functional brushed stainless steel finish hides finger marks
- Universal fit for left- and right-handed doors
- Handle can be fitted 3 different ways with the Supa™ fixing kits (sold separately)
- Choose from through fix, concealed fix or back-to-back offset fix
- Quality made from 304 grade stainless steel as standard

Fixing Options

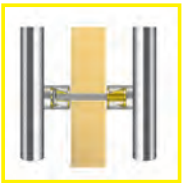

Back-to-back Offset Fix
MPH573315

Through Fix
MPH573302

Concealed Fix
MPH573320

How many fixing kits do you need?
The fixing kits for the Supa™ stainless steel door pull handle range come in pairs.
That means one fixing kit is sufficient to fit an offset bar Supa™ pull handle up to 1200mm long, which has two fixing points. For Supa™ offset pull bar handles 1400mm or longer which have three fixing points, you'll need to buy two fixing kits.

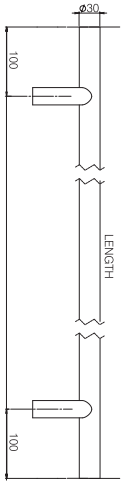

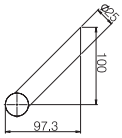

DESCRIPTION	TYPE	STAINLESS STEEL GRADE	BAR LENGTH	FIXINGS	NO. OF FIXING KITS REQUIRED	BRUSHED STAINLESS
Supa Pull Bar	Offset	304	400mm	2	1	MPH573002
Supa Pull Bar	Offset	304	600mm	2	1	MPH573012
Supa Pull Bar	Offset	304	800mm	2	1	MPH573022
Supa Pull Bar	Offset	304	1000mm	2	1	MPH573032
Supa Pull Bar	Offset	304	1200mm	2	1	MPH573042
Supa Pull Bar	Offset	304	1400mm	3	2	MPH573052
Supa Pull Bar	Offset	304	1600mm	3	2	MPH573062
Supa Pull Bar	Offset	304	1800mm	3	2	MPH573072

FIX TYPE	COVER CAP DIA	FIXINGS	PART CODE
Through Fix Kit	30mm	2 per kit	MPH573302 (BRUSHED STAINLESS)
Back-to-back Offset Fix Kit	30mm	2 per kit	MPH573315
Concealed Fix Kit	-	2 per kit	MPH573320

TYPE	SYMBOL
Fire Door	FD30/60
Guarantee	10 YEARS MECHANICAL GUARANTEED · 25 YEARS ANTI-CORROSION GUARANTEED
Kitemarked	TS007: 2012 KM 559658
Secured by Design	SBD Approved
PAS 24	PAS 24
TS 007 is a standard developed in response to concerns over cylinder attacks. The standard is characterised by a 3 star rating system and can be achieved by combining a 1 star cylinder with 2 star security door furniture or by using a standalone 3 star cylinder.	TS 007 1 approved · TS 007 2 approved · TS 007 3 approved

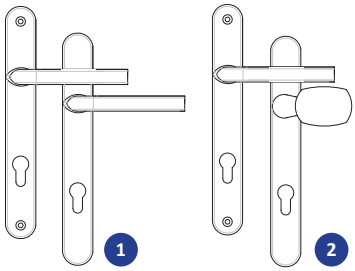

Lever/Lever

Lever Pad

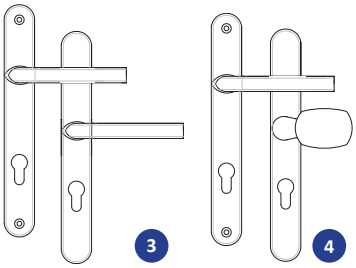

Lever/Offset Lever

Lever/Offset Pad

Blank Plate

DIAGRAM NO. ON OPERSITE PAGE	HANDLE TYPE									MEASUREMENTS (mm)				SECURITY		GUARANTEES				
	INTERNAL	EXTERNAL																		
	LEVER	LEVER	PAD	OFFSET LEVER	OFFSET PAD	BLANK	SPRUNG	UN-SPRUNG	LONG LEVERS	PZ LEVER TO CYLINDER	BACKPLATE LENGTH	BACKPLATE WIDTH	SCREW TO SCREW	PAS 24	TS 007	STAINLESS STEEL	CORROSION (Years)	MECHANICAL (Years)	BRAND	PAGE
1	•	•					•			92	231	28	211				5 or 10	10	Mila Hero	237
1	•	•					•			92	212	35	122					10	Trojan	238
1	•	•					•			92	243	35	211					10	Trojan	239
1	•	•					•			92	212	35	122			•	25	10	Trojan	240
1	•	•					•			92	243	35	211			•	25	10	Trojan	241
1	•	•					•			92	212	35	122	•	2 Star	•	25	10	Trojan	242
1	•	•					•			92	243	35	210	•	2 Star	•	25	10	Trojan	243
1	•	•					•		•	92	243	35	210					10	Trojan	244
1	•	•					•			92	245	32	122				10	10	Hoppe	245
1	•	•					•			92	245	92	215				10	10	Hoppe	246
1	•	•					•			92	245	92	122				10	10	Hoppe	247
1	•	•					•			92	245	32	215				10	10	Hoppe	248
1	•	•					•			70	235	27	215						Hoppe	249
1	•	•					•			70	205	27	180						Hoppe	349
1	•	•					•			70	205	28	180						Kore	250
1	•	•					•			68	245	30	215						Hoppe	250
1	•	•					•			92	270	33	200-255						Yale	251
2	•		•				•			92	212	35	122					10	Trojan	238
2	•		•				•			92	243	35	210	•	2 Star	•	25	10	Trojan	243
2	•		•				•			92	243	32	122				10	10	Hoppe	245
2	•		•				•			92	245	32	122				10	10	Hoppe	247
2	•		•				•			92	245	32	215				10	10	Hoppe	248
2	•		•				•			68	245	30	215						Hoppe	250
3	•			•			•			92/62	243	35	211			•	25	10	Trojan	241
3	•			•			•			92/62	243	35	210	•	2 Star	•	25	10	Trojan	243
4	•				•		•			92/62	231	28	211				5 or 10	10	Mila Hero	237
4	•				•		•			92/62	243	35	211					10	Trojan	239
4	•				•		•			92/62	243	35	210	•	2 Star	•	25	10	Trojan	243
4	•				•		•			92/62	245	32	215				10	10	Hoppe	246
4	•				•		•			92/62	245	32	215				10	10	Hoppe	248
5						•	•			NA	212	35	122					10	Trojan	238
5						•	•			NA	243	35	210					10	Trojan	239

Yale LOCKMASTER 21

Still the lock you know and trust, only even better!

The Yale Lockmaster 21 is the newest iteration of Britain's best-selling multipoint door lock, so called because it comes 21 years after the very first Lockmaster was released.

This latest offering delivers the same reliability, ease of use and long service life you've come to expect from Lockmaster, coupled with the usual high levels of security and superior performance, but with some great new features added in:

Lockmaster's renowned hook and pin unit and pre-compression rollers are cleverly positioned within 100mm of each other to assist with PAS 24 testing.

The push-in latch snib feature has been specifically designed to prevent accidental lock-outs.

Lockcase now comes with secure centre hook as standard.

New hardened screw-in plastic tidy boxes last longer and give a neat, streamlined finish.

There's a new selection of profile-related packers to choose from.

A new 13mm axis one-piece keep can withstand greater loads during security testing to create the strongest Lockmaster yet!

For more info please see pages 112-115 or ask our sales office.

Hero 231mm Sprung Door Handles

- Lever/lever or lever/pad combinations available
- Supplied with two spindles, fixing screws and spring cassettes to ensure lever always goes back to 90º
- Modern styling and clean lines to suit contemporary properties
- Compliments the rest of the hero range
- User-friendly rounded lever designed to fit comfortably in the hand during use
- 5 popular finishes – white, black, polished chrome, satin silver or gold
- Box quantity: 10
- Outer carton quantity: 20
- Pallet quantity: 640 (white & black finish) 540 (chrome & gold finish)

Dimensions

- Backplate: 231 x 28mm
- Screws: 211mm
- Centres: 92mm or 92/62mm

Guarantees & accreditations

- Independently tested to 100,000 cycles with a 10-year mechanical guarantee to ensure long service life
- Corrosion tested to 480 hours salt spray with a 10-year painted surface finish guarantee and 5-year plated surface guaranteed for assured weather resistance
- Strength tested to 100kg

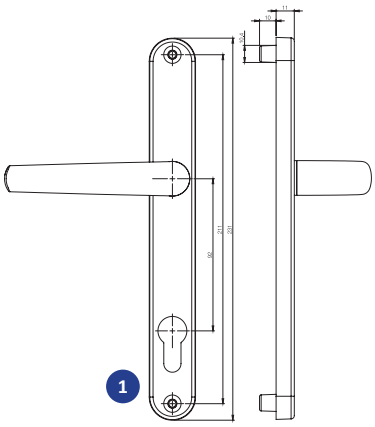

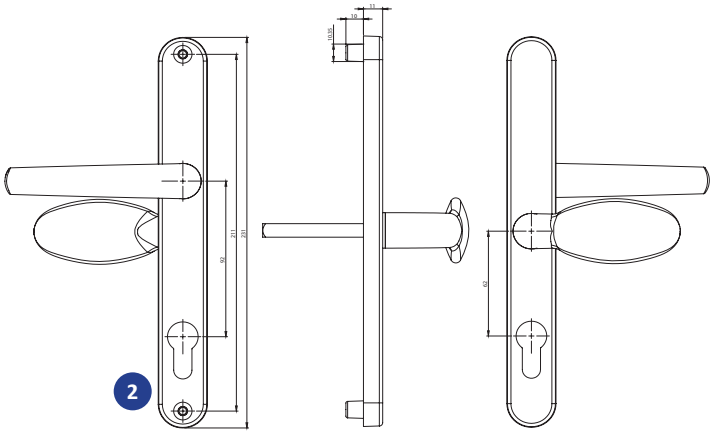

TYPE	WHITE	BLACK	POLISHED CHROME	POLISHED GOLD	BOX QTY.
LEVER/LEVER 1	HDL40511	HDL45511	HDL42511	HDL48511	10
LEVER/OFFSET PAD 2	HDL40532	HDL45532	HDL42532	HDL48532	10

TROJAN ...The Strength of Hardware Design

Sparta 212mm Sprung Door Handles

- Designed to suite with Sparta espag handles (page 59), tilt/turn handles (page 84), hinges (pages 255, 258 & 261-262) and letterplates (pages 265-267)
- Backplate is 212 x 35mm internal & external
- Screw to screw measurement: 122mm
- Centre measurement: 92mm PZ
- Also available in stainless steel variants (pages 240 & 242)

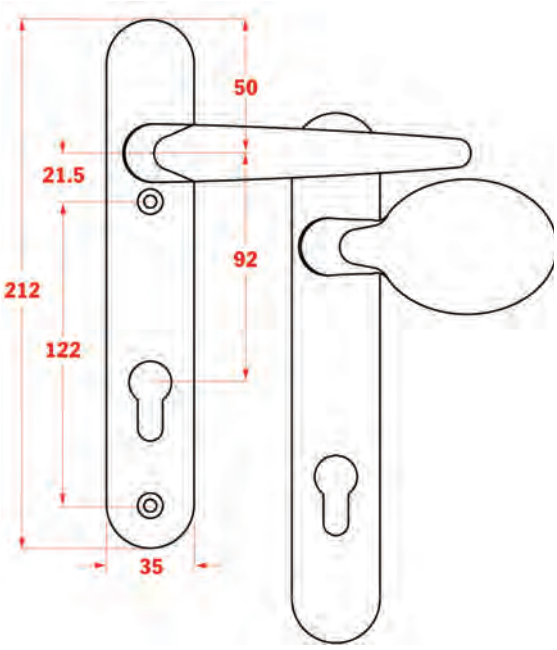

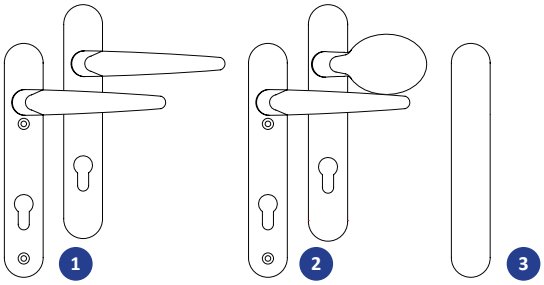

TYPE		WHITE	BLACK	PVD GOLD	CHROME	SATIN SILVER	BOX QTY.
LEVER/LEVER	1	HDL90011	HDL95011	HDL98011	HDL92011	HDL91011	10
LEVER/PAD	2	HDL90012	HDL95012	HDL98012	HDL92012	HDL91012	10
BLANK	3	HDL90014	HDL95014	HDL98014	HDL92014	HDL91014	10

Sparta 240mm Sprung Door Handles

TROJAN ...The Strength of Hardware Design

- Designed to suite with Sparta espag handles (page 59), tilt/turn handles (page 84), hinges (pages 255, 258 & 261-262) and letterplates (pages 265-267))
- Backplate is 243 x 35mm internal & external
- Screw to screw measurement: 211mm
- Centre measurement: 92mm or 92/62mm PZ
- Also available in stainless steel variants (pages 241 & 243)

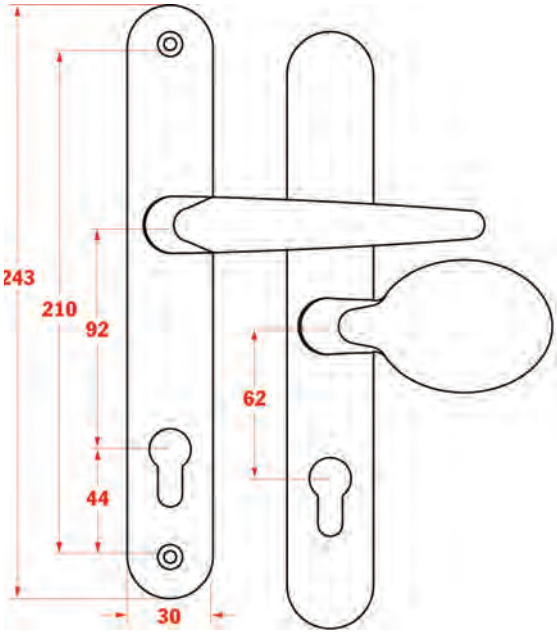

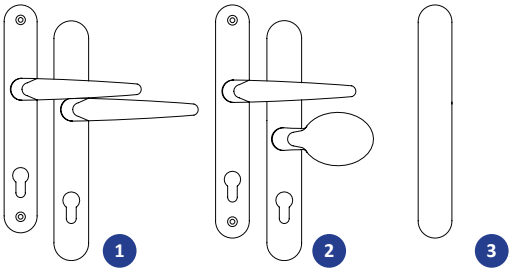

TYPE		WHITE	BLACK	PVD GOLD	CHROME	SATIN SILVER	BOX QTY.
LEVER/LEVER	1	HDL90511	HDL95511	HDL98511	HDL92511	HDL91511	10
LEVER/OFFSET PAD	2	HDL90532	HDL95532	HDL98532	HDL92532	HDL91512	10
BLANK	3	HDL90514	HDL95514	HDL98514	HDL92514	HDL91514	10

TROJAN
...The Strength of Hardware Design

Sparta 212mm Sprung Door Handles Stainless Steel Version

- Designed to suite with Sparta espag handles (page 59), tilt/turn handles (page 84), hinges (pages 255, 258 & 261-262) and letterplates (pages 265-267)
- Backplate is 212 x 35mm internal & external
- Screw to screw measurement: 122mm
- Centre measurement: 92mm PZ
- Available in stainless steel combi (external stainless steel, internal standard) or full stainless steel (both sides in stainless steel with PVCu or composite fixings)
- Stainless steel versions are manufactured in 304 stainless steel and come with an impressive 20+ year corrosion guarantee for the ultimate corrosion resistance
- Stainless steel versions cycle tested to 50,000 cycles PAS 24 compliant

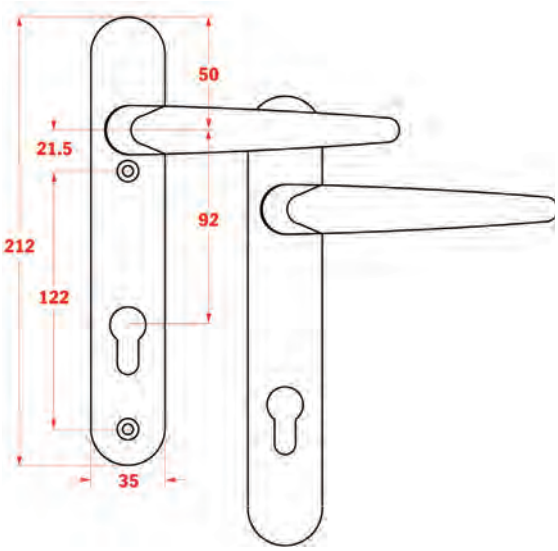

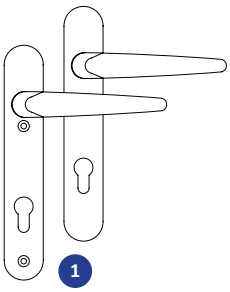

TYPE	PVD GOLD	BRUSHED GOLD	CHROME	BRUSHED STAINLESS	BOX QTY.
STAINLESS STEEL COMBI					
LEVER/LEVER (1)	HDL98011C	-	HDL92011C	-	10
STAINLESS STEEL COMBI PVCu Fixing					
LEVER/LEVER (1)	HDL98011S	HDL97011S	HDL92011S	HDL93011S	10

Sparta 240mm Sprung Door Handles Stainless Steel Version

TROJAN
...The Strength of Hardware Design

- Designed to suite with Sparta espag handles (page 59), tilt/turn handles (page 84), hinges (pages 255, 258 & 261-262) and letterplates (pages 265-267)
- Backplate is 243 x 35mm internal & external
- Screw to screw measurement: 211mm
- Centre measurement: 92 or 92/62mm PZ
- Available in stainless steel combi (external stainless steel, internal standard) or full stainless steel (both sides in stainless steel with PVCu or composite fixings)
- Stainless steel versions are manufactured in 304 stainless steel and come with an impressive 20+ year corrosion guarantee for the ultimate corrosion resistance
- Stainless steel versions tested to 50,000 cycles PAS 24 compliant

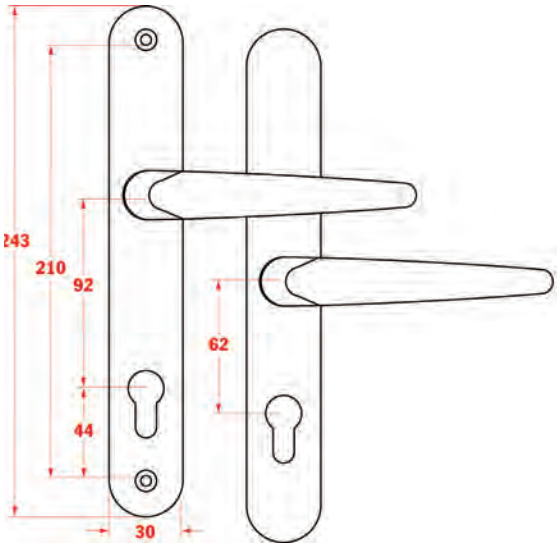

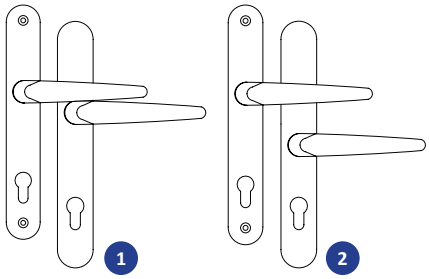

TYPE	PVD GOLD	BRUSHED GOLD	CHROME	BRUSHED STAINLESS	BOX QTY.
STAINLESS STEEL COMBI					
LEVER/LEVER (1)	HDL98511C	-	HDL92511C	-	10
LEVER/OFFSET LEVER (2)	-	-	HDL92531C	-	
STAINLESS STEEL PVCu Fixing					
LEVER/LEVER (1)	HDL98511S	HDL97511S	HDL92511S	HDL93511S	10
LEVER/OFFSET LEVER (2)	HDL98531S	-	HDL92531S	HDL93531S	10
STAINLESS STEEL COMBI COMPOSITE Fixing					
LEVER/OFFSET LEVER (1)	-	-	HDL92531SC	HDL93531SC	10

...The Strength of Hardware Design

TS 007 2 Star PAS 24 220mm Door Handle Stainless Steel Version

The Trojan TS 007 2 star door handle is a high quality, cost-effective handle incorporates a patented spring cassette to eliminate 'drooping handle' effect. The handle can be used in conjunction with a 1 star cylinder to still achieve the requirements of Document Q.

- Manufactured from 304 stainless steel
- Tested to 50,000 cycles
- Conforms to BS 1906
- Corrosion tested in excess of 1,000 hours (based on BS EN 1670)
- TS 007 accredited
- Abusive load tested to BS 6462

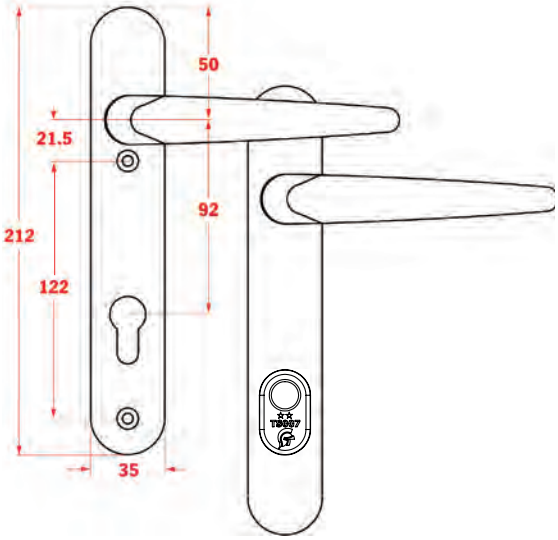

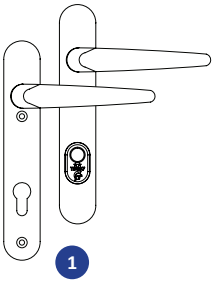

TYPE	WHITE	BLACK	PVD GOLD	CHROME	BOX QTY.
220 STAINLESS STEEL COMBI PVCu Fixing					
LEVER/LEVER (1)	HDL90611C	HDL95611C	HDL98611C	HDL92611C	10
220 STAINLESS STEEL COMBI COMPOSITE Fixing					
LEVER/LEVER (1)	HDL90611CC	HDL95611CC	HDL98611CC	HDL92611CC	10

TS 007 2 Star PAS 24 240mm Door Handle Stainless Steel Version

TROJAN
...The Strength of Hardware Design

The Trojan TS 007 2 star door handle is a high quality, cost-effective handle that incorporates a patented spring cassette to eliminate 'drooping handle' effect. The handle can be used in conjunction with a 1 star cylinder to still achieve the requirements of Document Q.

- Manufactured from 304 stainless steel
- Tested to 50,000 cycles
- Conforms to BS 1906
- Corrosion tested in excess of 1,000 hours (based on BS EN 1670)
- TS 007 accredited
- Abusive load tested to BS 6462

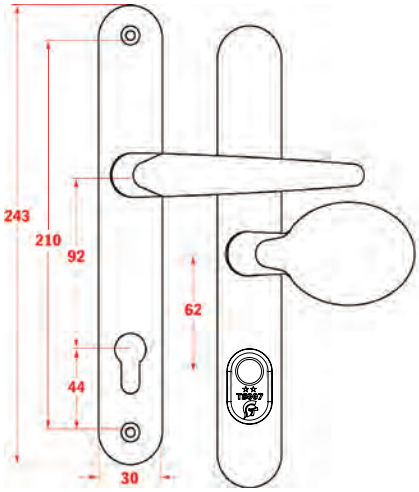

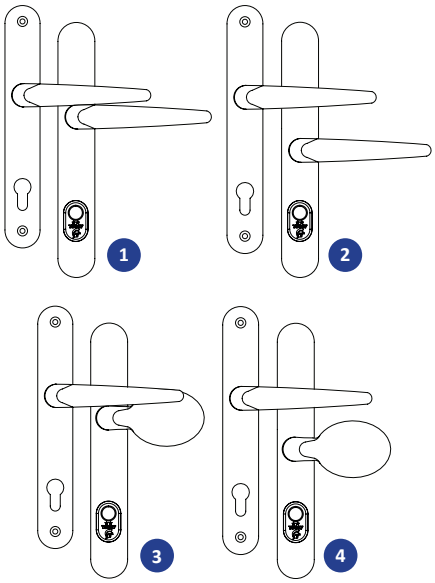

TYPE		WHITE	BLACK	PVD GOLD	CHROME	BOX QTY.
240 STAINLESS STEEL COMBI PVCu Fixing						
LEVER/LEVER	1	HDL90711C	HDL95711C	HDL98711C	HDL92711C	10
LEVER/OFFSET LEVER	2	HDL90731C	HDL95731C	HDL98731C	HDL92731C	10
LEVER/PAD	3	HDL90712C	HDL95712C	HDL98712C	HDL92712C	10
LEVER/ OFFSET PAD	4	HDL90732C	HDL95732C	HDL98732C	HDL92732C	10
240 STAINLESS STEEL COMBI COMPOSITE Fixing						
LEVER/LEVER	1	HDL90711CC	HDL95711CC	HDL98711CC	HDL92711CC	10
LEVER/OFFSET LEVER	2	HDL90731CC	HDL95731CC	HDL98731CC	HDL92731CC	10
LEVER/PAD	3	HDL90712CC	HDL95712CC	HDL98712CC	HDL92712CC	10
LEVER/ OFFSET PAD	4	HDL90732CC	HDL95732CC	HDL98732CC	HDL92732CC	10

TROJAN
...The Strength of Hardware Design

DDA Long Lever 243mm Sprung Door Handle

- Designed to suite with the Sparta espag handles (page 59), tilt/turn handles (page 84), hinges (pages 255, 258 & 261-262) and letterplates (pages 265-267)
- Door handle sets designed for the less-abled and the elderly
- Long lever for easier operation
- Backplate is 243 x 35mm internal & external
- Screw to screw measurement: 211mm
- Centre measurement: 92mm or 92/62mm PZ

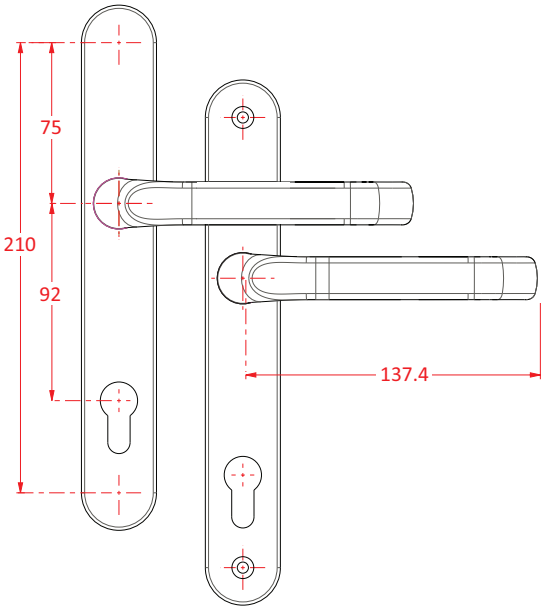

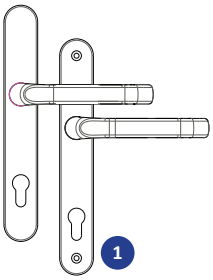

TYPE	WHITE	BLACK	PVD GOLD	CHROME	BOX QTY.
LEVER/LEVER (1)	HDL90515	HDL95515	HDL98515	HDL92515	10

Atlanta 220 240mm with 122 Screw Centres Door Handles

HOPPE® Handle of excellence.

- Backplate is 240 x 32mm internal & external
- Screw to screw measurement: 122mm usually associated with a 220mm backplate length
- Centre measurement: 92mm PZ

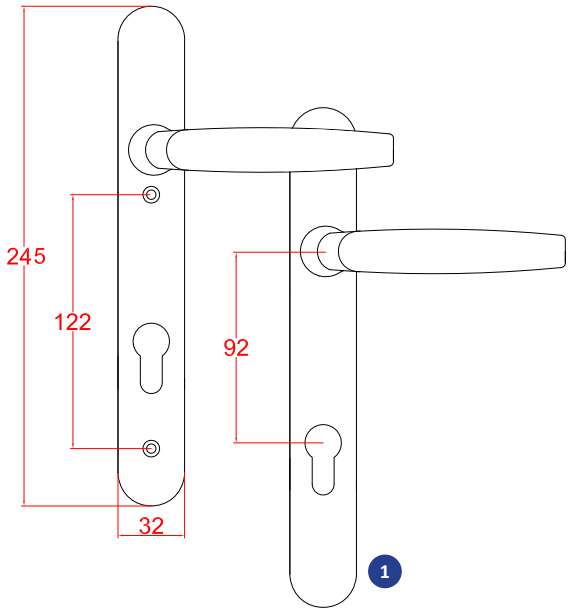

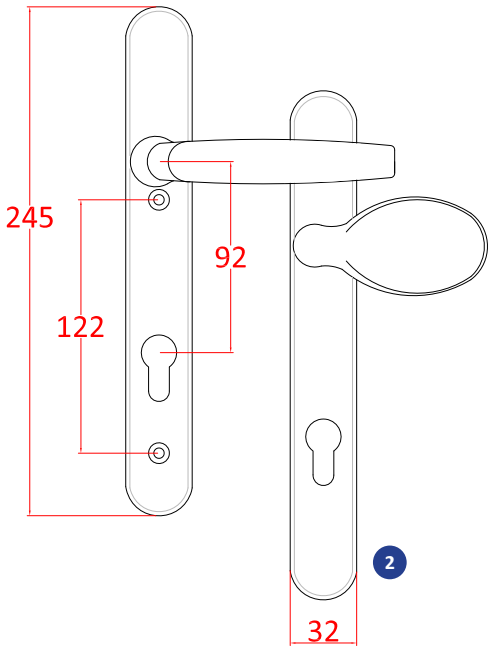

TYPE		WHITE	BLACK	PVD GOLD	CHROME	SILVER	POLISHED BRASS	BOX QTY.
LEVER/LEVER	1	HDL80011AT	HDL85011AT	HDL89011AT	HDL82011AT	HDL81011AT	HDL88011AT	20
LEVER/PAD	2	HDL80012AT	HDL85012AT	HDL89012AT	-	HDL81012AT	-	20

HOPPE
Handle of excellence.

Atlanta 240 Door Handles

- Backplate is 240 x 32mm internal & external
- Screw to screw measurement: 215mm
- Centre measurement: 92mm or 92/62mm PZ

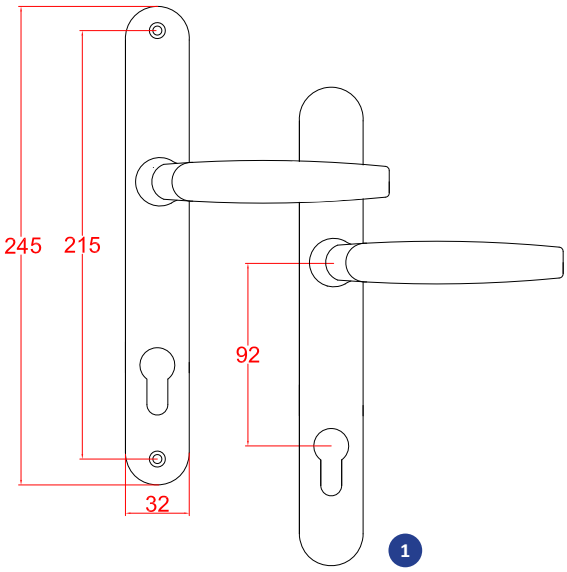

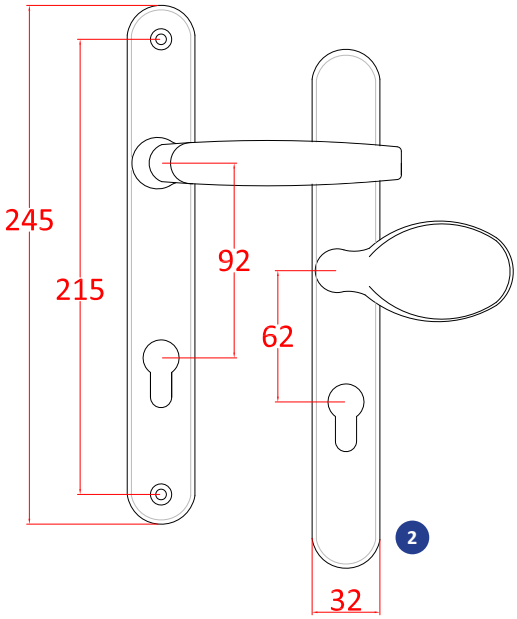

TYPE	WHITE	BLACK	F3 GOLD	CHROME	SILVER	POLISHED BRASS	BOX QTY.
LEVER/LEVER (1)	HDL80511AT	HDL85511AT	HDL89511AT	HDL82511AT	HDL81511AT	HDL88511AT	5
LEVER/OFFSET PAD (2)	HDL80532AT	HDL85532AT	HDL89532AT	HDL82532AT	HDL81532AT	-	5

Birmingham 122 Screw Centres Sprung Door Handles

HOPPE®
Handle of excellence.

- Part of the Hoppe Duranorm range
- Cast aluminium lever and pressed backplate
- Backplates are always 245mm long however the screw positions take on the traditional measurements of the 220mm style handle with 122mm screw to screw
- 5 year surface guarantee across all finishes
- 5 year mechanical and operational guarantee

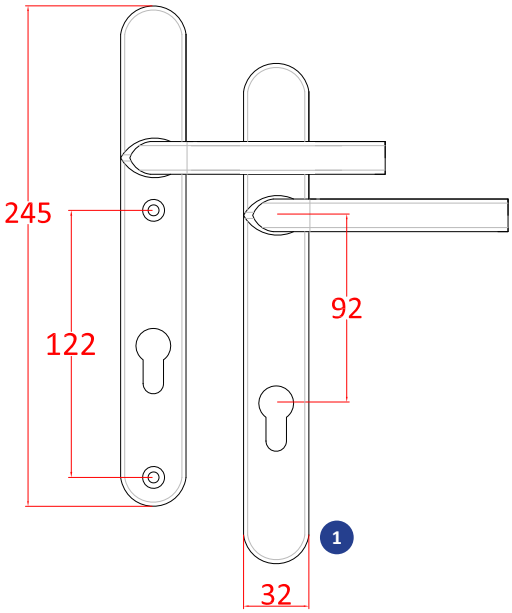

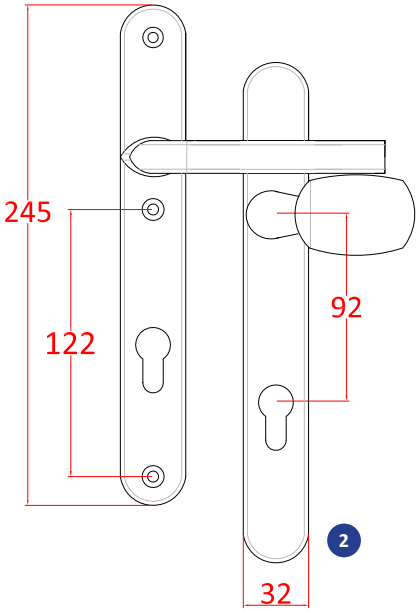

TYPE		WHITE	BLACK	GOLD	CHROME	SILVER	BOX QTY.
LEVER/LEVER	1	HDL80011BM	HDL85011BM	HDL89011BM	HDL82011BM	HDL81011BM	20
LEVER/PAD	2	-	-	HDL89012BM	HDL82012BM	HDL81012BM	20

HOPPE
Handle of excellence.

Birmingham 215 Screw Centres Sprung Door Handles

- Part of the Hoppe Duranorm range
- Cast aluminium lever and pressed backplate
- Backplates are always 245mm long however the screw positions take on the traditional measurements of the 240mm style handle, 215mm screw to screw
- 5 year surface guarantee across all finishes
- 5 year mechanical and operational guarantee

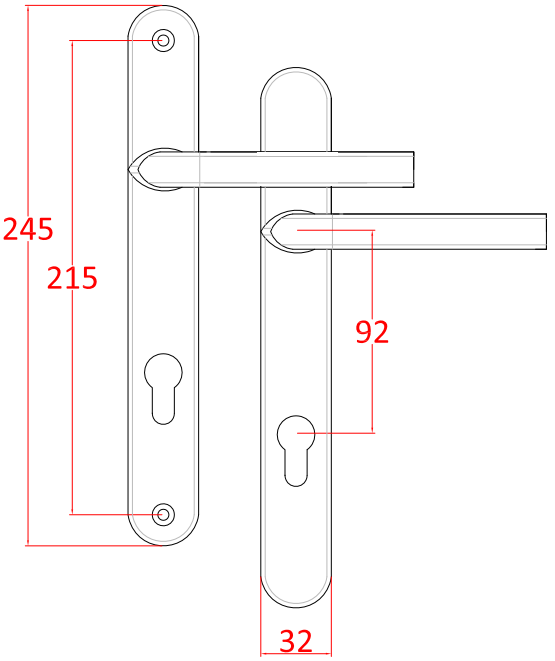

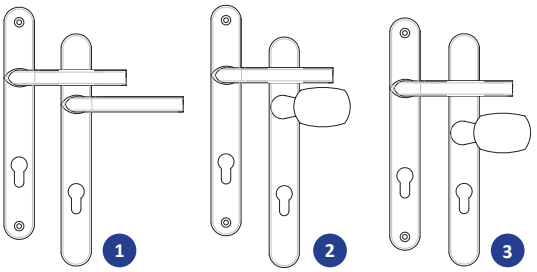

TYPE		WHITE	BLACK	GOLD	CHROME	SILVER	BOX QTY.
LEVER/LEVER	1	HDL80511BM	HDL85511BM	HDL89511BM	HDL82511BM	HDL81511BM	20
LEVER/PAD	2	HDL80512BM	-	-	-	-	20
LEVER/OFFSET PAD	3	-	-	-	-	HDL81532BM	20

Ideal for Repair

London Series 235mm Backplate 70mm Centre Door Handles

HOPPE® Handle of excellence.

- Backplate is 235 x 27mm internal & external
- Screw to screw measurement: 215mm
- Centre measurement: 70mm PZ

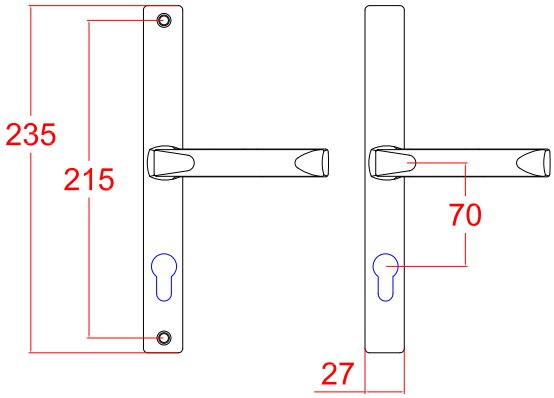

TYPE	WHITE	PVD GOLD	SILVER	BOX QTY.
LEVER/LEVER	HDL80811A	HDL89811A	HDL81811A	12

Ideal for Repair

London Series 205mm Backplate 70mm Centre Door Handles

HOPPE® Handle of excellence.

- Backplate is 205 x 27mm internal & external
- Screw to screw measurement: 180mm
- Centre measurement: 70mm PZ

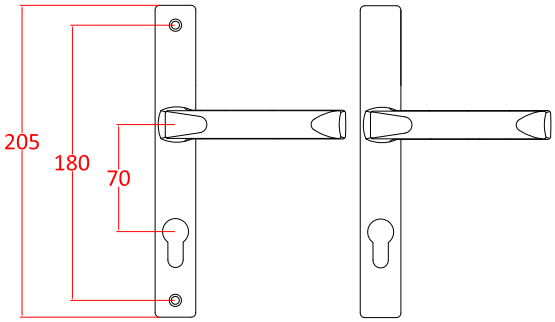

TYPE	WHITE	BLACK	PVD GOLD	SILVER	BOX QTY.
LEVER/LEVER	HDL80021B	HDL85021B	HDL89021B	HDL81021A	15

70mm Door Handles

Ideal for Repair

- Sprung door handle
- Suitable for Ferco 70mm locks
- 180mm fixing centres
- Available in white, chrome & PVD gold
- Complete with screws & 150mm long spindle

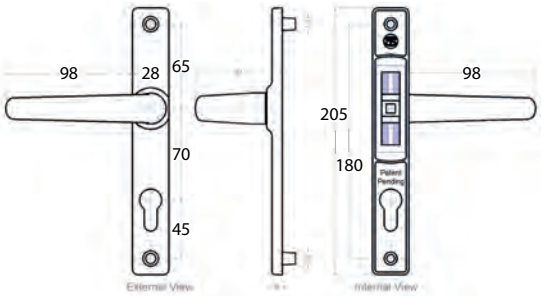

TYPE	WHITE	PVD GOLD	CHROME	BOX QTY.
LEVER/LEVER	HDL36020	HDL36090	HDL36022	20

Fullex 68mm Door Handle

HOPPE® Handle of excellence.

Ideal for Repair

- Hoppe door handle designed to fit the Fullex 68mm centre door bolts
- Backplate is 245 x 30mm internal & external
- Screw to screw measurement: 215mm
- Centre measurement: 68mm PZ

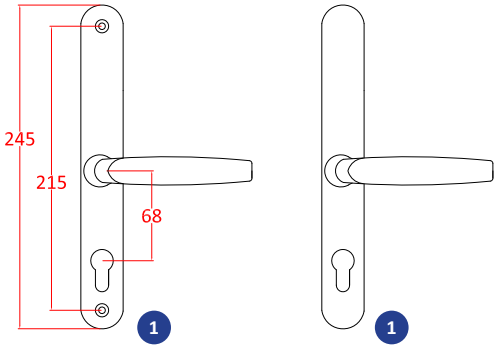

TYPE	WHITE	PVD GOLD	SILVER	BOX QTY.
LEVER/LEVER (1)	HDL90681	HDL99681	HDL91681	15
LEVER/PAD	HDL90682	HDL99682	-	15

Ideal for Repair

Repair Door Handle

- Replacement handle to suit 92mm PZ door locks
- Can be used to replace PVCu, composite and wooden handles
- Fully adjustable screw centres - screws move to suit existing fixing holes
- Easy to fit
- Ideal for use with the Yale Doormaster™ replacement door lock (pages 159-161)
- Available in white, chrome & gold

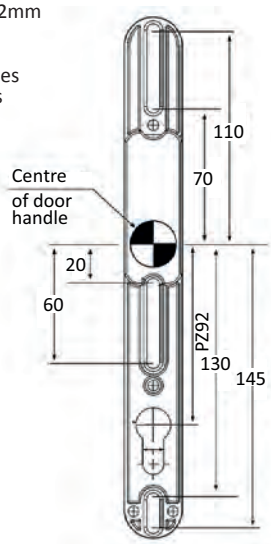

TYPE	WHITE	GOLD	CHROME	BOX QTY.
LEVER/LEVER	HDL30511R	HDL39511R	HDL32511R	4

Cylinder Guard

- Cylinder guards sit underneath the external handle and surround the cylinder
- The guard prevents cylinders from attack and manipulation if the handle is removed

NB: these can be bought in any required quantity

PART CODE	BOX QTY.
PCG00519	100

Spring Cassette Cartridge

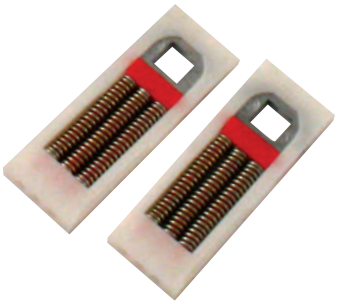

- Spring cassette to suit un-sprung door handles.
- Springs are set to one side as oppossed to both sides granting additional versitility with some door handles, where having springs on both sides would clash with the screw ports

NB: these can be bought in any required quantity

PART CODE	BOX QTY.
HDL89995	600

DOOR HANDLE ACCESSORIES

YS170 Door Bolt Split Spindle Kit

- Split spindle kit designed for the Yale YS170 door bolt

50/50mm	50/70mm	60/65mm	BOX QTY.
YAL99991	YAL99992	YAL99996	10

Replacement Spindles

- 8mm wide spindles designed to fit most door handles but not restricted to door handles only
- Various sizes available from 100 to 140mm in length

NB: these can be bought in any required quantity

100mm	130mm	140mm	BOX QTY.
SPN08100	SPN08130	SPN08140	1000

Lever Fixing Kit

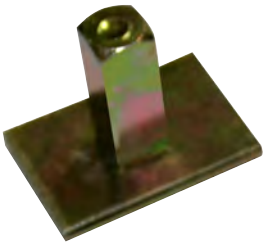

- Simple to install lever fixing kit that prevents the handle from operating the door lock
  Please note: The spindle sleeve may not fit all handles exactly and may allow slight movement

PART CODE	BOX QTY.
HDL80190	1

Spindle Sleeve

- Spindle sleeve designed to turn a 7mm spindle into an 8mm spindle

PART CODE	BOX QTY.
HDL89999	1

DELTA | Kore | MILA Quality & service | It's in our DNA | TROJAN ...The Strength of Hardware Design | Yale®

TYPE					PROFILE SUITABILITY			SIZES									ADJUSTMENT				MAX WEIGHT			SECURITY				GUARNTEES				
								ANGLE					STEP																			
BUTT	REBATE	FLAG	SLAB	CLAW	PVCu	COMPOSITE	ALUMINIUM	FLAT	5º	15º	45º	13mm EUROGROOVE	14-20mm	16, 19, 22mm	18, 19, 22mm	18, 21, 23mm	VERTICAL (mm)	HORIZONTAL (mm)	LATERAL (mm)	COMPRESION	PER HINGE (kg)	2 HINGES (kg)	3 HINGES (kg)	PAS 24	SBD	DOC Q	HINGE HOOK	STAINLESS STEEL	CORROSION	MECHANICAL	BRAND	PAGE
•					•			•	•		•	•					+4		±2				80								Kore	254
•					•			•	•	•	•							+4			80										Yale Neon	254
	•				•							•						+4			80			•		•					Yale Neon	255
•					•												+4		±4	±2			100	•		•	•	430	BS EN 1670	10 Years, EN 1191	Trojan Athena	255
		•			•										•		+5		±5	±1		100		•	•	•			BS EN 1670	25 Years	Mila ProSecure	256
		•			•											•	+4	+4		+4			100	•		•			500 hrs	100,000 Cycles	Delta	257
		•			•								•				+4 -2		±5	±1 adj	100			•		•					Yale 3D T	258
		•			•									•															Class 4	10 Years	Trojan Patriot	258
			•			•		•																					BS EN 1670	100,000 Cycles	Yale Slab	260
•					•	•	•											+4											BS EN 1670	100,000 Cycles	Yale Elevator	260
						•		•									±4		±4				100	•		•		430	BS EN 1670	10 Years	Trojan Athena	261
•						•		•									±4		±3	± 1.75			100							10 Years	Trojan 3D Composite	262
HINGE PROTECTORS																					MAX FORCE											
				•	•																						•				Trojan Protector	259
				•	•																up to 9Kn			•		•	•		240 hrs		GT QuardGuard	259

TYPE	SYMBOLS	TYPE	SYMBOLS
PAS 24	PAS 24	Max Hinge Weight White = 2 or 3 Hinges Red = 1 Hinge	80kg MAX 3 HINGES 80kg MAX PER HINGE 100kg MAX 3 HINGES 100kg MAX PER HINGE
Guarantees	10 YEARS MECHANICAL GUARANTEE PAINTED SURFACE FINISH 10 years GUARANTEE PLATED SURFACE FINISH 5 years GUARANTEE MECHANICAL OPERATION 25 years GUARANTEE		

Kore Butt Door Hinge

80kg MAX 3 HINGES

- Adjustability ensures optimal weather-tightness and easy set-up
- 2-way adjustable (+/- 2mm lateral,+ 4mm vertical)
- Adjustment achieved without removing the door leaf
- Flat, 5º, chamfered & 13mm rebated versions
- Steel hinge pin
- 80kg maximum sash weight (3 hinges)

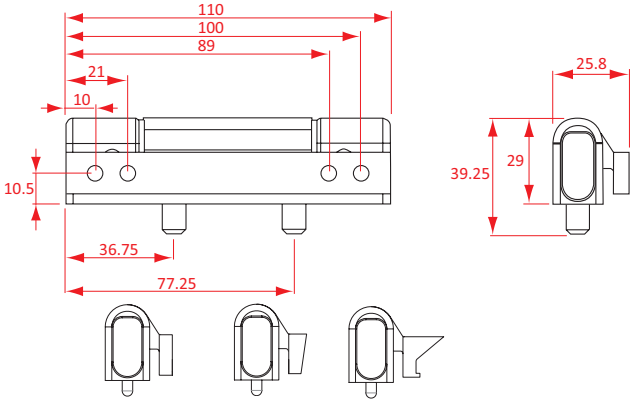

FINISH	FLAT	5º	45º (REHAU)	BOX QTY.
WHITE	HIN18000	HIN18050	HIN18030	30
BROWN	HIN18002	HIN18052	HIN18032	30
JIGS	HIN18997	HIN18998	HIN18996	1

Neon Adjustable Butt Door Hinge

80kg MAX PER HINGE

- 4mm horizontal adjustment without affecting compression and without having to remove the door sash from the frame
- Simple screwdriver adjustment
- Strong enough to carry 80kg per hinge
- External hinges fitted with security grub-screw to prevent removal of pin
- Available to suit profiles with bevel angles of 0° (flat), 5° and 15°
- Profile specific versions also available to suit Rehau bevelled profiles

FINISH	FLAT	5º	15º	45º (REHAU)	BOX QTY.
WHITE	HIN12000	HIN12050	HIN12150	HIN12930	10
BROWN	HIN12002	-	-	HIN12932	10
JIGS	HIN11999	HIN11999	HIN11999	HIN11999C	1

80kg MAX PER HINGE

Neon Adjustable Rebate Door Hinge

Yale®

- Eurogroove-fitting door hinge
- Ideal for use with bevelled / chamfered profile systems
- + 4mm horizontal adjustment without affecting compression and without removing the door sash from the frame
- Simple screwdriver adjustment
- Strong enough to carry 80kg per hinge
- External hinges fitted with security grub-screw to prevent removal of pin
- Available for 13mm eurogroove position profiles

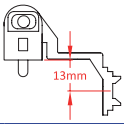

FINISH	13mm	BOX QTY.
WHITE	HIN12910	10
JIGS	HIN11999	1

10 YEARS MECHANICAL GUARANTEE

100kg MAX 3 HINGES

Athena Butt Door Hinge

TROJAN ...The Strength of Hardware Design

The Trojan Athena door hinge is PAS 24 compatible and is designed to fit all standard eurogroove systems, with no unsightly gaps visible after making 3D adjustments. It features a double knuckle for increased load bearing andis designed to be fitter and installer-friendly thanks to a lift on, lift off design.

Product Materials:
- Zinc alloy
- Stainless steel – grade 430
- Plastic – GF nylon, UV stabilised ABS and acetal

Testing:
- Corrosion tested to BS EN 1670
- Painted finishes grade 5, plated finishes Grade 4
- Conforms to EN1191 – tested to 100,000 cycles
- Can achieve PAS 24 as part of a door assembly

Adjustments:
- Height: +/- 4mm
- Compression: +/- 2.00mm
- Lateral: +/- 4mm
- Weight Capacity:

- 3 hinges carry 100kg

Athena butt hinge security hook profile specific sold separately.

WHITE	BLACK	PVD GOLD	CHROME	SATIN SILVER	OAK	BROWN	BOX QTY.
HIN19400	HIN19405	HIN19409	HIN19402	HIN19404	HIN19408	HIN19401	24
ATHENA BUTT HINGE SECURITY HOOK					ATHENA BUTT HINGE JIG		
Profile specific, please ask our sales office for part to match your pofile					HIN19499		24

MILA Quality & service | It's in our DNA

ProSecure Door Hinge

SBD Approved

PAINTED SURFACE FINISH 10 years GUARANTEE

PLATED SURFACE FINISH 5 years GUARANTEE

MECHANICAL OPERATION 25 years GUARANTEE

100kg MAX 2 HINGES

These high-security door hinges from Mila might take less than a minute to fit right out the box, but they'll be looking great and working perfectly for years to come! Independent tests prove the ProSecure door hinge is not only one of the fastest-fitting door hinges on the market, but it also delivers advanced SBD-approved security performance to PAS 24: 2012, exceptional corrosion resistance to BE EN 1670: 2007 Grade 5 and ultra-reliable operation achieving BE EN 1935:2012 grade 12 to give 200,000 cycles bearing 100kg load. It's an impressive proposition in a fitter-friendly format!

Features

- One-piece hinge ready to fit out of the box in less than 58 seconds
- Load capacity for 2 hinges: 100kg
- Two quick-fit installation methods: slide-on to the frame in one piece or remove the pin and front-fit on low reveals
- Quick and fuss-free 3D adjustment (+/- 5mm lateral, + 5mm vertical and +/- 1mm compression adjustment)
- Only 2 holes to pre-drill
- Captive hinge lid means fixing screws are easy to access for a faster, straightforward fit
- Rubber tongue keeps hinge lid open until installation is finished
- Static-cling TechTape provides scratch-protection during transit, fitting and installation
- Includes optional loose fixing lugs for a solid fix on any profile
- 10 different finishes available

Guarantees & certifications

- Security tested to PAS 24: 2012
- Secured by Design SBD approved
- Highly corrosion resistant to BS EN 1670:2007 Grade 5
- Ultra-long life assured – tested to BS EN 1670:2007 achieving 200,00 cycles under 100kg load

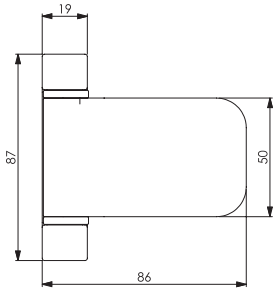

FRONT

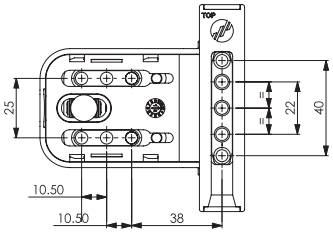

REVERSE

NB: If you require a hinge jig, please order MDH19999

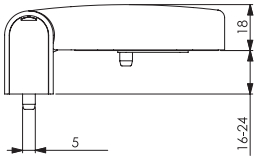

TOP/BOTTOM

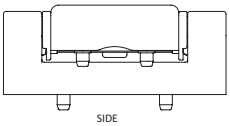
SIDE

UP-STAND	WHITE	BLACK	CREAM	PVD GOLD	CHROME	BOX QTY.
18mm	MDH11800	MDH11805	MDH11803	MDH11809	MDH11802	12
19mm	MDH11900	MDH11905	MDH11903	MDH11909	MDH11902	12
22mm	MDH12200	MDH12205	MDH12203	MDH12209	MDH12202	12
UP-STAND	**SATIN SILVER**	**LIGHT OAK**	**BROWN**	**ANTHRACITE GREY**	**CHARTWELL GREEN**	**BOX QTY.**
18mm	MDH11801	MDH11808	MDH11804	MDH11806	MDH11807	12
19mm	MDH11901	MDH11908	MDH11904	MDH11906	MDH11907	12
22mm	MDH12201	MDH12208	MDH12204	MDH12206	MDH12207	12

100kg MAX 3 HINGES

Delta Security Door Hinge

DELTA

This high quality door hinge is supplied in 5 parts to allow for quick and easy installation. The innovative design means the hinge will hold the door firmly in place once compression and adjustments have been made, to minimising the likelihood of dropping occurring.

- Can meet the requirements of PAS 24
- Adjustment guide
- Protective cover on front of hinge
- Die cast cover caps to give perfect colour match
- 4mm Hex or Allen Key provided to fit vertical, horizontal & compression adjustment screws
- Suites with Kore window and door hardware
- Hinge pin security screw is only accessible when the door is open
- Sash cover is a slide fit, held securely whilst cover fixing screws are installed
- Conveniently packed in trays made of recycled material containing 3 hinges
- Tested to 100,000 cycles
- Load performance: tested to 100kg with 3 hinges
- 500hrs corrosion resistance

Conveniently packed in trays containing 3 hinges

UP-STAND	WHITE	BLACK	PVD GOLD	CHROME	SATIN SILVER	TAN	BROWN	ANTHRACITE GREY	BOX QTY.
18mm	HIN25050	HIN25056	HIN25058	HIN25052	HIN25051	HIN25054	HIN25055	HIN25053	12
21mm	HIN25150	HIN25156	HIN25158	HIN25152	HIN25151	HIN25154	HIN25155	HIN25153	12
23mm	HIN25250	HIN25256	HIN25258	HIN25252	HIN25251	HIN25254	HIN25255	HIN25253	12

NB: If you require a hinge jig, please order HIN25999

3D T Flag Door Hinge

100kg MAX PER HINGE

PAS 24

- 3-way adjustable flag hinge; +/- 5mm lateral adjustment, +/- 1mm adjustment, +4/-2mm height adjustment
- Security cover plate for external doors as standard
- Suitable for a wide range of profile upstands: 1420mm
- PAS 24 compliant
- 100kg load bearing per hinge

WHITE	CHROME	BROWN	PVD GOLD	BOX QTY.
HIN17000	HIN17005	HIN17002	HIN17009	40

TROJAN ...The Strength of Hardware Design

Patriot Plus High Security Door Hinge

10 YEARS MECHANICAL GUARANTEE

- Offers a slim, unobtrusive appearance with improved clearance for plaster line and finishing
- Easy, accurate and independent 3D adjustment means no visible gap during height adjustment, for better aesthetics and stability
- Supplied pre-assembled and ready to fit, dramatically speeding up the fitting process
- 10-year mechanical and Class 4 corrosion resistance

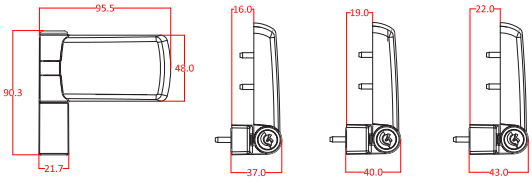

SIZE	WHITE	BLACK	PVD GOLD	CHROME	SATIN SILVER	OAK	BROWN	BOX QTY.
16mm	HIN19200	HIN19205	HIN19209	HIN19202	HIN19204	HIN19208	HIN19201	24
19mm	HIN19210	HIN19215	HIN19219	HIN19212	HIN19213	HIN19218	HIN19211	24
22mm	HIN19220	HIN19225	HIN19229	HIN19222	-	HIN19228	HIN19221	24
	WHITE 1mm	BLACK 1mm	WHITE 2mm	BLACK 2mm	WHITE 6mm	BLACK 6mm	JIG	
Packers	HIN19290	HIN19291	HIN19292	HIN19293	HIN19294	HIN19295	HIN19299	24

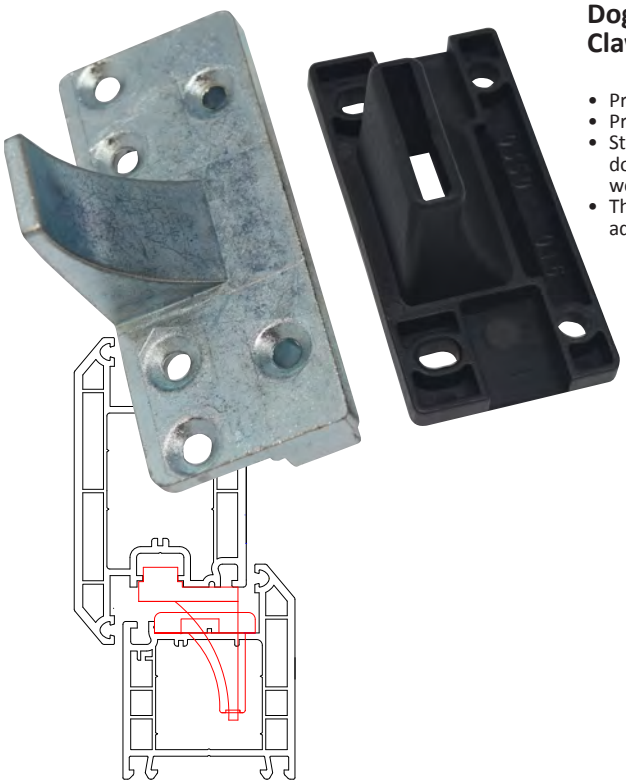

Dog Bolt Hinge Protector Claw with Sleeve set

TROJAN ...The Strength of Hardware Design

- Protector claw with sleeve tidy set
- Protector claw in silver finish, sleeve section in black
- Steel claw provides extra security to the hinge side of the door when used in conjunction with any range of door hinges we have available
- These sets are profile specific, plase ask our sales office for advice when ordering

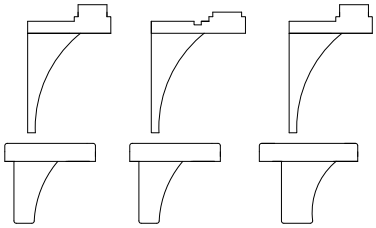

MK1 SET	MK2 SET	MK3 SET	BOX QTY.
DSP10007A	DSP10014A	DSP10015A	50

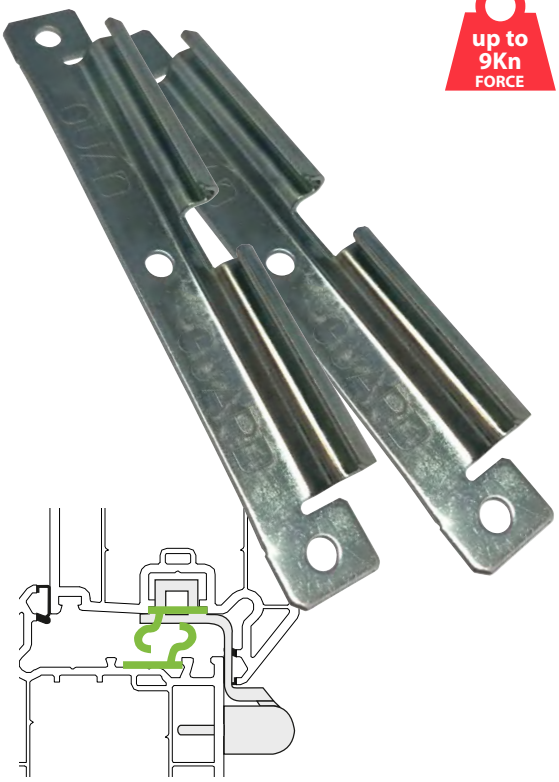

up to 9Kn FORCE

QUAD-GUARD PVCu Door Hinge Protector

GT WINDOW PRODUCTS LIMITED

Quad-Guard is a revolutionary new product designed to simply and effectively enhance the security of PVCu doors. It does the job of a traditional door dog bolt, with two different versions that work for all PVCu profiles to give a flexible security solution. What's more, the Quad-Guard is face-fixed, so it's quick and easy to fit – no routing required!

- Face-fitted, non-rout hinge protection (simple, speedy fabrication)
- Fully tested to PAS 24
- Retrofittable
- Manufactured in the UK from high-tensile steel
- 240 hours salt spray
- Load tested up to 9Kn
- Quad-Guard should be fitted directly in line with the door hinges.
- Fits most PVCu profiles, please check before ordering.

Tip: We recommend you fit the Quad-Guard using carbon steel zinc coated dome head screws with either a 4.8mm or 4.2mm thread (not included). This will give the required screw retention for a firm fit and optimum performance.

SIZE (LxWxH)	CODE	BOX QTY.
120 x 20 x 12mm	GTQ10000	200

Yale Slab Composite Door Hinge

- Simple design
- Available in white
- Prevents door drop
- Corrosion resistance to BS EN 1670:2007 Grade 4
- Tested to a minimum order 100,000 cycle operational lifespan

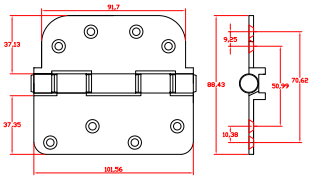

Mk5

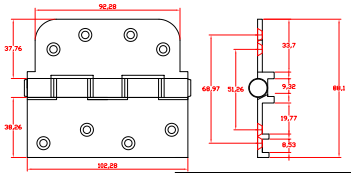

Mk6

DESCRIPTION	FINISH	MAX SIZE	PART CODES	BOX QTY.
Mk5	WHITE	101.5 x 88.4mm	HIN12400	100
Mk6	WHITE	102.2 x 881mm	HIN80103	100

Elevator 2D Composite Door Hinge

- 4mm horizontal adjustment
- Finished in white or brown
- Matching hinge cover plate 45 x 2040mm also available in PVCu or aluminium
- Corrosion resistance to BS EN 1670:2007 Grade 4
- Tested to a minimum order 100,000 cycle operational lifespan

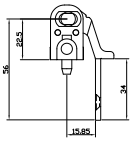

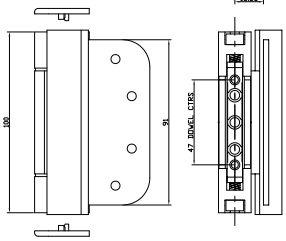

TYPE	WHITE	BROWN	BOX QTY.
2D Hinge	HIN41010	HIN41012	50
Hinge Cover Plate			
Aluminium	HIN20156	HIN20158	1
JIGS	HIN41999	-	1

Athena Composite Door Hinge

TROJAN
...The Strength of Hardware Design

Despite its subtle, slimline appearance, the Trojan Athena door hinge boasts impressive strength making it the ideal hinge when working to achieve PAS 24 or meet the requirements of approved Doc Q. What's more, the hinge has impressive load bearing capabilities perfectly suited to heavy duty applications such as large or triple-glazed doors.

- Supplied pre-assembled and ready to fit
- No unsightly gaps visible following adjustment
- Double knuckle gives increased load bearing (3 hinges carry 100KG)
- Full float technology facilitates simple and accurate 3D adjustment with door closed
- Lift on, lift off design makes life easy when fitting
- Can achieve PAS 24 as part of door assembly
- 10-year mechanical guarantee

Product Materials:
- Zinc alloy
- Stainless steel – grade 430
- Plastic – GF nylon, UV stabilised ABS and acetal

Testing:
- Corrosion tested to BS EN 1670
- Painted finishes Grade 5, plated finishes Grade 4
- Conforms to EN1191 – tested to 100,000 cycles
- Can achieve PAS 24:2016 as part of a door assembly

Adjustments:
- Height: +/- 4mm
- Lateral: +/- 4mm
- Weight capacity: 3 hinges carry 100kg

WHITE	BLACK	PVD GOLD	CHROME	SATIN SILVER	OAK	BROWN	BOX QTY.
HIN19420	HIN19425	HIN19429	HIN19422	HIN19424	HIN19428	HIN19421	24

Composite Door Hinge Cover Plate

Stormguard™

Designed to cover the back edge of a composite door, fits with the 2D elevator composite door hinge and the slab hinge.

SIZE	WHITE	BROWN	FIXINGS
45 x 2040mm	HIN20256	HIN20258	10

Trojan 3D Composite Butt Door Hinge

...The Strength of Hardware Design

- Trojan composite door hinge with full 3D adjustment
- Allows for simultaneous vertical adjustment across all hinges ensuring even load distribution
- All finishes are UV rated
- Fits into rebate to give unobtrusive secure design
- 10 Year mechnical guarantee
- Weight capacity: 3 hinges 100KG
- Maximum door size: 1m wide x 2.2m high
- Lateral adjustment: +/- 3mm
- Vertical adjustment: +/- 4mm
- Compression adjustment: +/- 1.75mm

Description	WHITE	OAK	BROWN	BOX QTY.
3D Composite Door Hinge	HIN14000	HIN14004	HIN14002	24

Storguard Brush Pile with or with-out Fin (200m)

Commercial and domestic properties with the super strong brush pile.

- 12 x 6.9mm
- 200m roll
- With or without fin

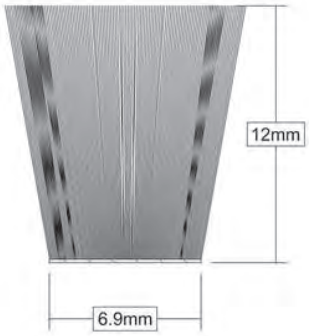

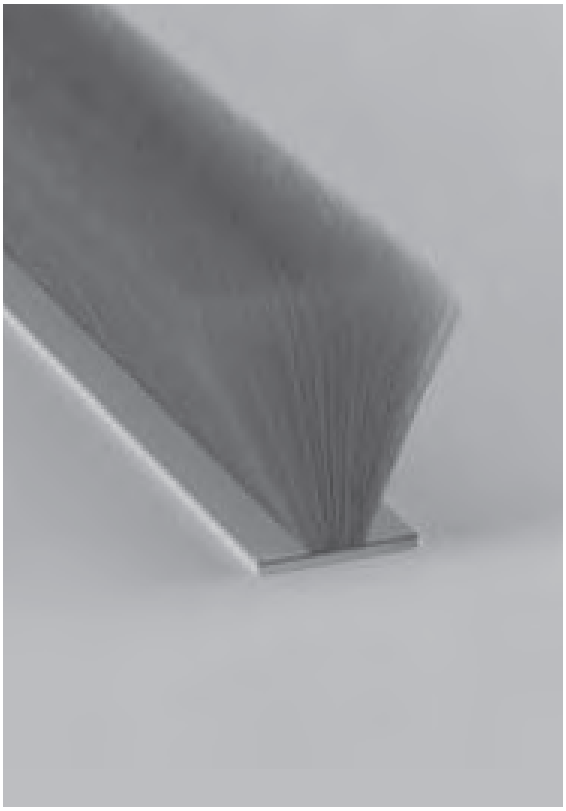

DESCRIPTION	12 x 6.9mm	PACK SIZE	BOX QTY.
Brush Pile with-out Fin	STG12690	200m	4
Brush Pile with Fin	STG12690F	200m	4

TROJAN ...The Strength of Hardware Design

Yale®

FITTING POSITION		TELESCOPIC SLEEVES	FLAP ANGLE	SIZES			SECURITY			GUARANTEE			BRAND	NAME	PAGE
PANEL	MIDRAIL			APERTURE	INTERNAL	EXTERNAL	PAS 24	DOC Q	TS 008	STANLESS STEEL	CORROSION	MECHANIICAL			
•		20-40mm	170º	226 x 38mm	265 x 70mm	265 x 70mm						10 Years	Yale	Yaleseal 10”	264
	•	40-80mm	170º	226 x 38mm	265 x 70mm	265 x 70mm						10 Years	Yale	Yaleseal 10”	264
•		20-40mm		264 x 48mm	304 x 70mm	304 x 70mm						10 Years	Yale	Yaleseal 12”	264
	•	40-80mm		264 x 48mm	304 x 70mm	304 x 70mm						10 Years	Yale	Yaleseal 12”	264
	•	36-70mm		271 x 40mm	316 x 50mm	316 x 50mm						10 Years	Yale	Slim-master 12”	265
•		20-40mm	180º	263 x 50mm	300 x 70mm	300 x 70mm				•	25 Years	10 Years	Trojan	Unicorn 12”	265
	•	40-80mm	180º	263 x 50mm	300 x 70mm	300 x 70mm				•	25 Years	10 Years	Trojan	Unicorn 12”	265
	•	40-75mm		246 x 49.4mm	300.5 x 98.4 x 52mm	300.5 x 96mm	•	•	•	•	25 Years	10 Years	Yale	Post-master	266-267

TYPE	SYMBOLS	TYPE	SYMBOLS
PAS 24	PAS 24	**BS Kite Mark**	TS008: 2015
Guarantees	10 YEAR GUARANTEE 10 YEAR MECHANICAL GUARANTEE 10 YEAR GUARANTEE; 25 YEAR GUARANTEE 25 YEAR SURFACE FINISH GUARANTEE 25 YEAR GUARANTEE	**Doc Q**	DOCUMENT Q APPROVED
TS 008	TS 008 is a rating for the letter plate, or flap, covering the door aperture for receipt of postal items, together with a letter box on the inside of doors, walls or panels. This is a security requirement of PAS 24 & document Q which deals with phishing through a letterplate.		

Yaleseal 10” Range Letterplate

- Telescopic sleeves for panel fitting 20 - 40mm and midrail fitting 40 - 80mm
- Smooth, rounded, modern design with sprung internal and external flaps
- Internal brush seals for improved draught exclusion
- Flap designed to open up to an angle of 170º, giving generous and clear access to the sleeve aperture (nominal 226 x 38mm)
- Will take A4 post flat
- Comes complete with fixings
- Overall letterplate size 265 x 70mm

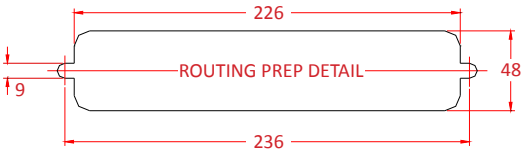

FINISH FLAP	FINISH FRAME	FITTING POSITION PANEL	FITTING POSITION MIDRAIL	BOX QTY.
ANODISED GOLD	BLACK	LBX52109A	LBX54109A	25
BLACK	BLACK	LBX52105	LBX54105	25
POLISHED GOLD	BLACK	LBX52109	LBX54109	25
POLISHED SILVER	BLACK	LBX52101P	LBX54101P	25
SILVER	BLACK	LBX52101	LBX54101	25
WHITE	BLACK	LBX52100	LBX54100	25
ANODISED GOLD	WHITE	-	LBX54119A	25
CHROME	WHITE	LBX52112	LBX54112	25
POLISHED GOLD	WHITE	LBX52119	LBX54119	25
SILVER	WHITE	LBX52111	LBX54111	25
WHITE	WHITE	LBX52110	LBX54110	25
CHROME	-	-	LBX54102	25

Yaleseal 12” Range Letterplate

- Telescopic sleeves for panel fitting 20 - 40mm and midrail fitting 40 - 80mm
- Unique draught protection provided internally by twin nylon brush seals
- Secure fixing from inside by two self-tapping screws
- Overall letterplate size 304 x 70mm

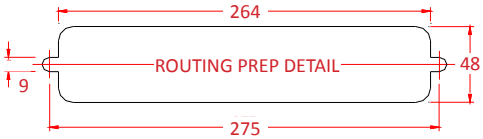

FINISH FLAP	FINISH FRAME	FITTING POSITION PANEL	FITTING POSITION MIDRAIL	BOX QTY.
BLACK	BLACK	LBX20005	LBX10005	25
ETCHED GOLD	BLACK	LBX20209	LBX10209	25
POLISHED GOLD	BLACK	LBX20109	LBX10109	25
POLISHED SILVER	BLACK	-	LBX10001P	25
CHROME	BLACK	LBX20002	LBX10002	25
PVD CHROME	BLACK	-	LBX10022	25
PVD GOLD	BLACK	-	LBX10129	25
SILVER	BLACK	LBX20001	LBX10001	25
WHITE	BLACK	LBX20010	LBX10010	25
CHROME	WHITE	LBX20012	LBX10012	25
POLISHED GOLD	WHITE	LBX20019	LBX10019	25
SILVER	WHITE	LBX20011	LBX10032	25
White	White	LBX20000	LBX10000	25

Slimmaster 12” Range Letterplates

- Designed for use in a narrow midrail of limited depth or at the bottom of door
- Telescopic sleeve depths from 36 - 70mm
- Secure fixing from inside by 2 self-tapping screws
- Matching flap and frame finishes
- Overall letterplate size 316 x 50mm

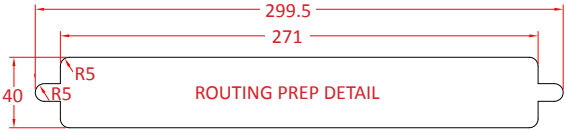

FINISH FLAP	FINISH FRAME	FITTING POSITION MIDRAIL	BOX QTY.
BLACK	BLACK	LBX30005	20
CHROME	CHROME	LBX30002	20
ETCHED GOLD	ETCHED GOLD	LBX30209	20
POLISHED GOLD	POLISHED GOLD	LBX30109	20
SILVER	SILVER	LBX30001	20
WHITE	WHITE	LBX30000	20

Unicorn 12’’ Range Letterplate

- A unique and elegant design
- Letter flaps and torsion springs are made from stainless steel for ultimate corrosion resistance
- Flaps open to 180 degrees, eliminating any excess leverage on pivot points
- External flap has a complete peripheral seal that also forms a full thermal and acoustic barrier
- Cycle tested to 100,000 operations
- Available in a choice of finishes with or without colour coded end caps
- Detachable lugs enabling face fix on panel
- Telescopic sleeves for panel fitting 20 - 40mm and midrail fitting 40 - 80mm which suits doors up to 70mm thick
- Overall letterplate size 300 x 70mm

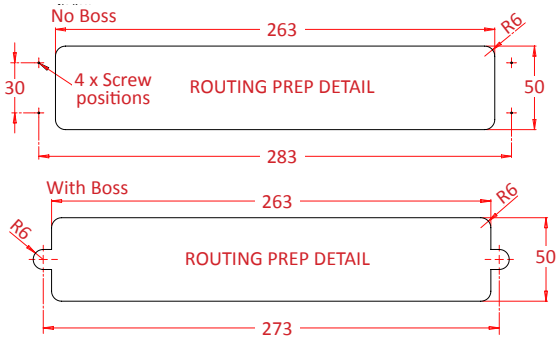

FINISH FLAP	FINISH END CAP	FITTING POSITION PANEL	FITTING POSITION MIDRAIL	BOX QTY.
BLACK	BLACK	LBX81015	LBX80005	10
SATIN SILVER	BLACK	-	LBX80001	10
PVD CHROME	BLACK	-	LBX80002	10
PVD GOLD	BLACK	-	LBX80009	10
WHITE	BLACK	-	LBX80000	10
PVD CHROME	PVD CHROME	LBX81012	LBX81002	10
BRUSHED STEEL	BRUSHED STEEL	LBX81013	LBX81003	10
PVD GOLD	PVD GOLD	LBX81019	LBX81009	10
WHITE	WHITE	LBX81010	LBX81000	10

Yale Postmaster Professional TS 008 Letterplate

The patented Postmaster Professional TS 008 Letterplate is designed to meet the exacting requirements of TS 008. It's suitable for doorsets that need to be Document Q or PAS 24:2016 compliant. Manufactured from 304 Stainless Steel for ultimate corrosion resistance, its simple but elegant styling will complement any doorface.

- TS 008 accredited
- Conforms to PAS 24:2016 and approved Document Q
- Suitable for both composite doors and PVCu doors (range from 40mm to 75mm)
- Inner protective housing has unique concealed hinge mechanism to prevent attack
- Inner flap has a positive stop feature for maximum protection from 'fishing'
- Will fit any door to meet TS 008 accreditation without the need to retest
- Available in white, PVD gold, chrome and satin stainless steel, external finishes from stock. Other finishes available to order including brushed stainless steel and black.
- Guarantee 25 years anti-corrosion available on all Stainless Steel product finishes
- Guarantee 10 years mechanical
- Overall letterplate size:
  Exteral: 300.5 x 96mm
  Internal: 300.5 x 98.4 x 52mm

Yale Postmaster Professional TS 008 Letterplate

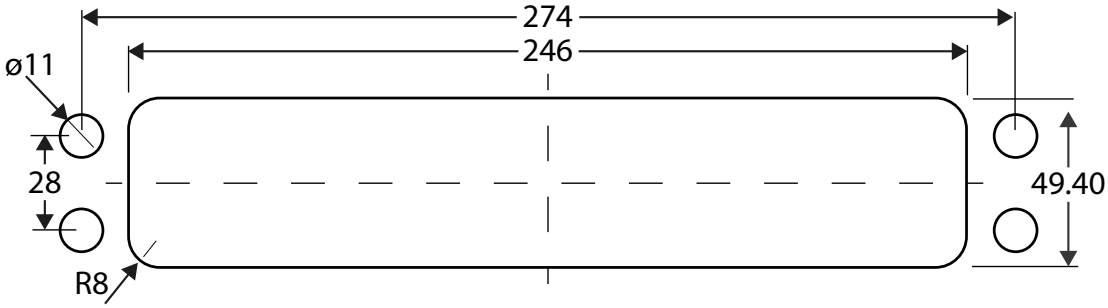

Product materials:
- External flap is manufactured from 304 stainless steel For ultimate corrosion resistance (galvanised mild steel For painted finishes)
- Internal flap manufactured from die-cast zinc

Testing:
- Corrosion tested to BS EN 1670 Grade 5
- Cycle test – opening and closing action tested to 20,000 cycles
- PAS 24:2016 compliant and approved Document Q
- TS 008:2015 compliant

Adjustments:
- For composite doors 0793-2001 (4 Screws m4 x 30mm csk pozi zn)
- For PVCu doors 0793-2002 (4 Screws m4 x 60mm csk pozi zn)

Flap Finish						
Outer	**WHITE**	**SATIN STAINLESS STEEL**	CHROME	**BRUSHED STAINLESS STEEL**	PVD GOLD	**BLACK**
Flap Finish						
Inner	**WHITE**	**WHITE**	**WHITE**	**WHITE**	**WHITE**	**BLACK**
Part Code	LBX82000	LBX82001	LBX82002	LBX82003	LBX82009	LBX82015
Box Qty.	10	10	10	10	10	10

Trojan Face Fix with or without Hole Door Knocker

- Manufactured from stainless steel
- Knockers suit with Trojan ranges such as Sparta 2 door handle, window handles and Unicorn letterplate
- Available in white, chrome, black & PVD gold
- Viewer sold seperately
- Overall size 76 x 170mm

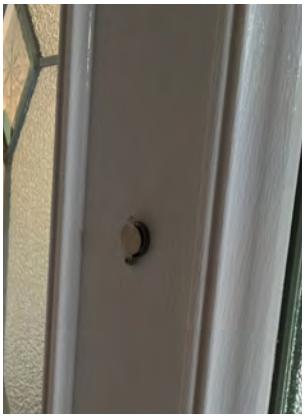

Inside of door, knocker fixings not visible

FINISH	NO HOLE	WITH HOLE	BOX QTY.
WHITE	KNK70010	KNK70000	20
CHROME	KNK70012	KNK70002	20
PVD GOLD	KNK70018	KNK70008	20
BLACK	KNK70015	KNK70005	20

Trojan Spyholes

- Manufactured from brass laquered or chrome plated to achieve BS EN 1670 Grade 5 - exceptionally high corrosion resistance (480Hrs)
- Designed to suite with the Trojan door knockers & stainless steel range

NB: This style of spyhole will only fit the Trojan door knocker range (see above)

WHITE	CHROME	GOLD	BLACK	BOX QTY.
SPY70000	SPY70002	SPY70009	SPY70005	1

Face Fixed Spyhole Adaptor

- 20mm adaptor for use with the spyhole supplied with Trojan face fixed knockers.
- Adaptor extends spyhole from a maximum 55mm reach to 75mm to cover all major PVCu profile systems

NB: for a Trojan spyhole (please see the product to the left)

SIZE	BRASS	BOX QTY.
20mm	KNK79999	1

Slimline Urn Door Knocker

- Dimensions:
  Height 192mm
  Width 54mm
  Projection 11mm
  Fixings 142mm

CHROME	BRASS	BOX QTY.
KNK40420	KNK40421	10

Ponytail Door Knocker

- Dimensions:
  Height 152mm
  Width 34mm
  Projection 40mm
  Fixings 101mm

CHROME	BRASS	BOX QTY.
KNK40302	KNK40309	1

6” Urn with Hole Door Knocker

- 6” Urn knockers supplied with fixings
- Dimensions:
  Height 162mm
  Width 72mm
  Projection 11mm
  Fixings 100mm
- Ready to team up with your spyhole (sold seperately see below)

WHITE	CHROME	BRASS	BLACK	BOX QTY.
KNK40410	KNK40412	KNK40419	KNK40415	1

6” Urn no Hole Door Knocker

- 6” Urn knockers supplied with fixings
- Dimensions:
  Height 162mm
  Width 72mm
  Projection 11mm
  Fixings 100mm

WHITE	SILVER	CHROME	BRASS	BLACK	BOX QTY.
KNK40400	KNK40401	KNK40402	KNK40409	KNK40405	1

160 Degree View Spyhole for Knockers with Holes

- Suitable for knockers that come with a hole to fit a spyhole (see above)

SIZE	WHITE	CHROME	BRASS	BOX QTY.
35-55mm	SPY40020	SPY40022	SPY40029	1
EXTENSIONS				
10mm	-	-	SPY11000	100
20mm	-	-	SPY12000	100

Lion Head Door Knocker

- Available in 4” (102mm) or 6” (153mm)
- Dimensions:
  Height 130mm
  Width 90mm
  Project 26mm
  Fixings 62mm

SIZE	BRASS	BLACK	BOX QTY.
4 inch	KNK40791	KNK40750	1
SIZE	WHITE	CHROME	BOX QTY.
6 inch	KNK40700	KNK40760	1

Trojan Numerals

...The Strength of Hardware Design

- Dimensions:
  Height 76mm
- High quality, made from stainless steel
- Box qty of 20

25 YEARS ANTI-CORROSION GUARANTEE FOR 25 YEARS

NUMBER	CHROME PLATE	SATIN CHROME	BRUSHED STEEL	PVD GOLD
0	NUM70200	NUM70100	NUM70300	NUM70800
1	NUM70201	NUM70101	NUM70301	NUM70801
2	NUM70202	NUM70102	NUM70302	NUM70802
3	NUM70203	NUM70103	NUM70303	NUM70803
4	NUM70204	NUM70104	NUM70304	NUM70804
5	NUM70205	NUM70105	NUM70305	NUM70805
6 or 9	NUM70206	NUM70106	NUM70306	NUM70806
7	NUM70207	NUM70107	NUM70307	NUM70807
8	NUM70208	NUM70108	NUM70308	NUM70808

Trojan Letters

...The Strength of Hardware Design

- Letters: A –G
- Dimensions:
  Height 76mm
- High quality, made from stainless steel
- Complete with screws

25 YEARS ANTI-CORROSION GUARANTEE FOR 25 YEARS

LETTER	CHROME PLATE	PVD GOLD	BOX QTY.
A	LET70002A	LET70008A	20
B	LET70002B	LET70008B	20
C	LET70002C	LET70008C	20
D	LET70002D	LET70008D	20
E	LET70002E	LET70008E	20
F	LET70002F	LET70008F	20
G	LET70002G	LET70008G	20

Yale WS16 Door Chain & Bolt

- Integral steel dead bolt for additional security
- Heavy duty chain helps protect against cropping attack
- Safe caller identification
- Angled fixing screws help door restraint against a forced attack
- Successfully tested to DHF TS 003:2012 - Door Chains and Limiters
- Secured By Design approved

2 YEAR GUARANTEE MECHANICAL

SBD Approved

BRASS	BOX QTY.
YDC40008A	1

Carlisle Brass AA75 Heavy Duty Door Chain

- Breaking strain 180 newtons
- Dimensions: Chain Retainer 60 x 16mm, Chain Length 200mm & Angle Plate 46 x 32 x 38mm
- Available in chrome plate, polished brass and satin chrome.
- Complete with screws

up to 180n FORCE

BRASS	CHROME	SATIN CHROME	BOX QTY.
DCH79135C	DCH79136C	DCH79155	25

Kore Door Restrictor Stay

- 90º door restrictor
- Ideal for securing french doorsat 80º, 85º or 90º angles
- Suitable for PVCu, aluminium and timber doors
- Non–handed
- Simple and fast to fit
- Sold as sperate parts. You will need to order both frame and sash parts.

PART	SIZE	CODE	BOX QTY.
Sash	280mm	STY23057A	25
Frame	95mm	STY23057B	25

Kore Deluxe Door Restrictor Stay

- 90º door restrictor with hold open facility
- Unique end-snapper helps hold the door open
- Ideal for french doors
- Suitable for PVCu
- Non–handed
- Simple and fast to fit

NB: product not suitable for permanenty holding open doors; for that application use a cabin hook (see below).

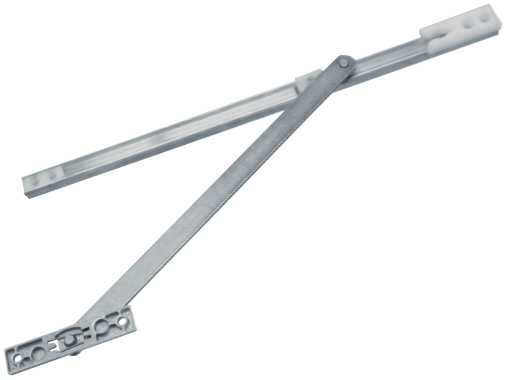

SIZE	AIR GAP	CODE	BOX QTY.
335mm	4mm	STY23058S	50
335mm	12mm	MAC95430U	50

Cabin Hooks

- Cabin hooks available in three sizes 6'', 8'' and 10''

SIZE	BRASS	CHROME	BOX QTY.
6 inch	CHK10069	CHK10111	10
8 inch	CHK10089	CHK10115	10
10 inch	CHK10109	CHK10117	10

Restrictor Stay

- 90º door restrictor
- Suitable for use on doors or side hung windows
- Concealed when the door or vent is closed and offers no internal obstruction when opened
- Suitable for PVCu
- Non handed
- Simple and fast to fit

14 inch version

10 inch version

10 inch	14 inch	BOX QTY.
STY23103	STY23143	100

Door Closer

- Suitable for fire door use rated to BS EN 1154 Part 1: 2000 FD120 (120 minute) fire doors
- Suitable for doors up to a maximum of 60kg and/or 950mm wide
- Universal handing
- Fixed Size 3
- Dimensions: 178 x 42 x 64mm
- Stocked finish - matt silver
- Covers and arms available to special order - bright stainless steel, satin stainless steel and PVD gold

BS EN 1154 FD120 60kg MAX

PART CODE	BOX QTY.
DCL70001	1

Drop Plate

- Designed to fit to the Eurospec DCL70001 door closer
- Required on PVC chamfered or sculptured profiles

PART CODE	BOX QTY.
DCL70111	1

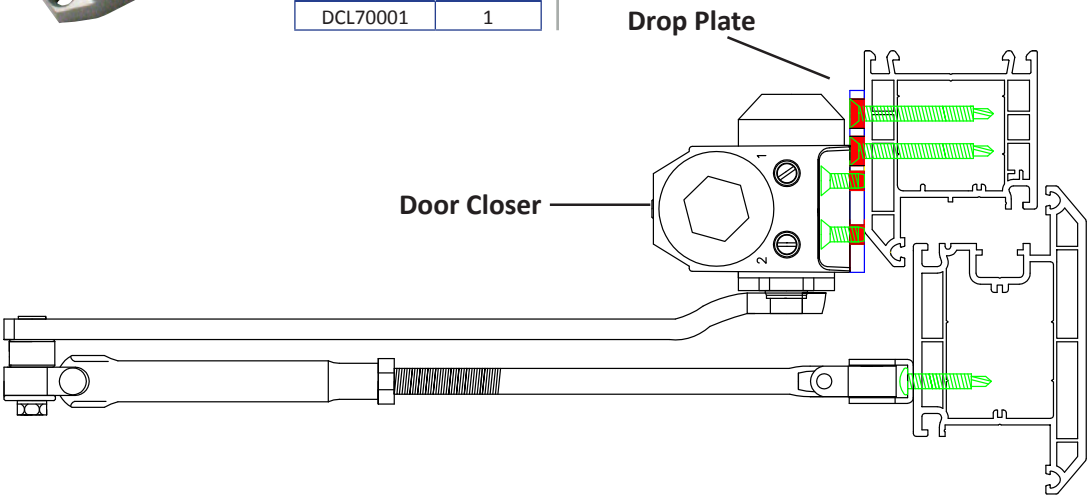

Yale LOCKMASTER 21

Still the lock you know and trust, only even better!

The Yale Lockmaster 21 is the newest iteration of Britain's best-selling multipoint door lock, so called because it comes 21 years after the very first Lockmaster was released.

This latest offering delivers the same reliability, ease of use and long service life you've come to expect from Lockmaster, coupled with the usual high levels of security and superior performance, but with some great new features added in:

Lockmaster's renowned hook and pin unit and pre-compression rollers are cleverly positioned within 100mm of each other to assist with PAS 24 testing.

The push-in latch snib feature has been specifically designed to prevent accidental lock-outs.

Lockcase now comes with secure centre hook as standard.

New hardened screw-in plastic tidy boxes last longer and give a neat, streamlined finish.

There's a new selection of profile-related packers to choose from.

A new 13mm axis one-piece keep can withstand greater loads during security testing to create the strongest Lockmaster yet!

For more info please see pages 112-115 or ask our sales office.

Proline AM3-70 Inward Opening Low Threshold

- Designed for door set manufacturers - can be installed as the fourth side of the door frame or retrofitted
- Complies with Part M of the building regulations when used in conjunction with the low threshold rear ramps
- Thermally broken to meet thermal bridging and insulation requirements
- Can be used with many different frame and door materials, e.g. wood, PVCu, fibreglass, aluminium, steel and carbon fibre
- Ideal for use with carpeted floors. Optional clip-in internal transition ramps also allow use with tiled or wooden floors
- Non-slip surfaces ensure a safe grip in wet conditions

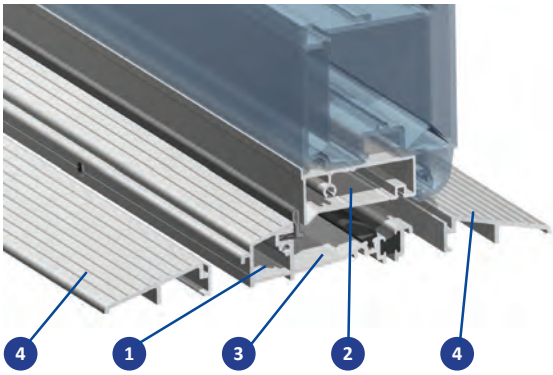

1 Proline AM3-70 Low Threshold

FINISH	1m	2m	3m	BOX QTY.
SILVER	LTH51001	LTH51002	LTH51003	5
GOLD	LTH59001	LTH59002	LTH59003	5

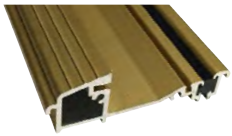

2 Sash Infill Bars

FINISH	1m	2m	3m	BOX QTY.
SILVER	LTH20451	LTH20511	LTH20541	20
GOLD	LTH20459	LTH20519	LTH20549	20

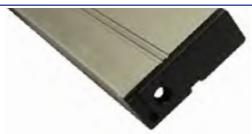

3 Frame Connectors

Please enquire with Sales for profile suitability

5 Low Threshold Front Ramps

FINISH	1m	2m	3m	BOX QTY.
SILVER	LTH93111	LTH93121	LTH93131	5
GOLD	LTH93119	LTH93129	LTH93139	5

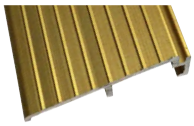

4 Low Threshold Rear Ramps

FINISH	1m	2m	3m	BOX QTY.
SILVER	LTH90011	LTH90021	LTH90031	5
GOLD	LTH90019	LTH90029	LTH90039	5

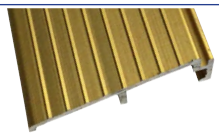

Sash Infill French Door Shootbolt End Cap

PART CODE		BOX QTY.
LTH21599		1

Note: Suits 45,51 & 54mm Infill bars

6 Low Threshold Shootbolt Keep

PART CODE		BOX QTY.
LTH210*1		1

* Please enquire with our sales team for profile suitability.

7 13mm Shootbolt Keep Plug Tidy

PART CODE		BOX QTY.
LTH23005		1

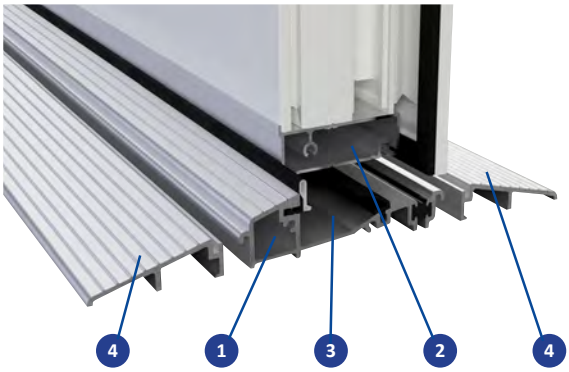

Proline AM3EX-78 Inward Opening Low Threshold

Stormguard

- Designed for door set manufacturers - can be installed as the fourth side of the door frame or retrofitted
- Complies with Part M of the building regulations when used in conjunction with the low threshold rear ramps
- Thermally broken to meet thermal bridging and insulation requirements
- Can be used with many different frame and door materials, e.g. wood, PVCu, fibreglass, aluminium, steel and carbon fibre
- Ideal for use with carpeted floors. Optional clip-in internal transition ramps also allow use with tiled or wooden floors
- Non-slip surfaces ensure a safe grip in wet conditions
- 8mm wider than AM3-70

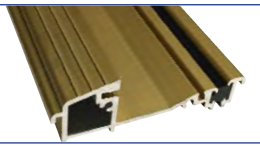

1 Proline AM3EX-70 Low Threshold

FINISH	1m	2m	3m	BOX QTY.
SILVER	LTH51101	LTH51102	LTH51103	5
GOLD	LTH59101	LTH59102	LTH59103	5

2 Sash Infill Bars

FINISH	1m	2m	3m	BOX QTY.
SILVER	LTH20451	LTH20511	LTH20541	20
GOLD	LTH20459	LTH20519	LTH20549	20

3 Frame Connectors

Please enquire with Sales for profile suitability

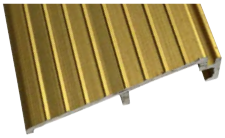

5 Low Threshold Front Ramps

FINISH	1m	2m	3m	BOX QTY.
SILVER	LTH93111	LTH93121	LTH93131	5
GOLD	LTH93119	LTH93129	LTH93139	5

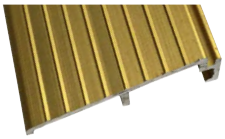

4 Low Threshold Rear Ramps

FINISH	1m	2m	3m	BOX QTY.
SILVER	LTH90011	LTH90021	LTH90031	5
GOLD	LTH90019	LTH90029	LTH90039	5

Sash Infill French Door Shootbolt End Cap

PART CODE		BOX QTY.
LTH21599		1

Note: Suits 45,51 & 54mm Infill bars

6 Low Threshold Shootbolt Keep

PART CODE		BOX QTY.
LTH210*1		1

* Please enquire with our sales team for profile suitability.

7 13mm Shootbolt Keep Plug Tidy

PART CODE		BOX QTY.
LTH23005	-	1

Proline AM5-70 Outward Opening Low Threshold

- Designed for door set manufacturers - can be installed as the fourth side of the door frame or retrofitted
- Complies with Part M of the building regulations when used in conjunction with the low threshold rear ramps
- Thermally broken to meet thermal bridging and insulation requirements
- Can be used with many different frame and door materials, e.g. wood, PVCu, fibreglass, aluminium, steel and carbon fibre
- Ideal for use with carpeted floors. Optional clip-in internal transition ramps also allow use with tiled or wooden floors
- Non-slip surfaces ensure a safe grip in wet conditions

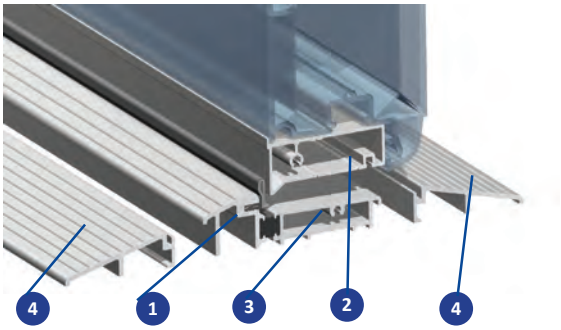

1 Proline AM5-70 Low Threshold

FINISH	1m	2m	3m	BOX QTY.
SILVER	LTH51021	LTH51022	LTH51023	5
GOLD	LTH59021	LTH59022	LTH59023	5

2 Sash Infill Bars

FINISH	1m	2m	3m	BOX QTY.
SILVER	LTH20451	LTH20511	LTH20541	20
GOLD	LTH20459	LTH20519	LTH20549	20

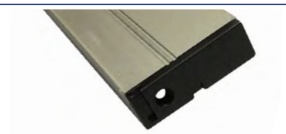

3 Frame Connectors

Please enquire with Sales for profile suitability

4 Low Threshold Front Ramps Extended 75mm

FINISH	1m	2m	3m	BOX QTY.
SILVER	LTH93111	LTH93121	LTH93131	5
GOLD	LTH93119	LTH93129	-	5

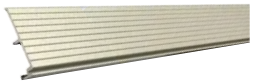

4 Low Threshold Front Ramps Low Version 49mm

FINISH	1m	2m	3m	BOX QTY.
SILVER	LTH90011	LTH90021	LTH90031	5
GOLD	LTH90019	LTH90029	LTH90039	5

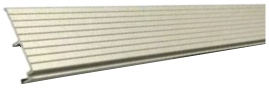

4 Low Threshold Rear Ramps

FINISH	1m	2m	3m	BOX QTY.
SILVER	LTH90111	LTH90121	LTH90131	5
GOLD	LTH90119	LTH90129	LTH90139	5

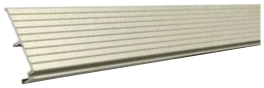

Sash Infill French Door Shootbolt End Cap

PART CODE		BOX QTY.
LTH21599		1

Note: Suits 45,51 & 54mm Infill bars

4 Low Threshold Shootbolt Keep

PART CODE		BOX QTY.
LTH220*1		1

* Please enquire with our sales team for profile suitability.

6 13mm Shootbolt Keep Plug Tidy

PART CODE		BOX QTY.
LTH23005		1

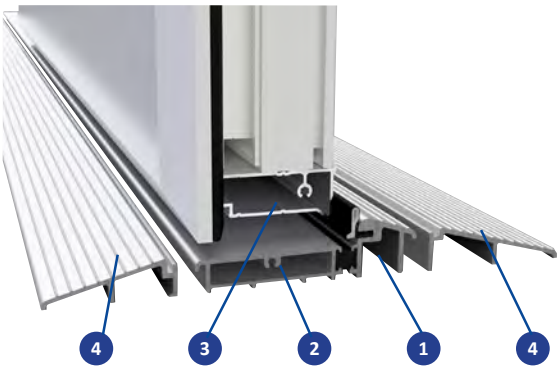

Proline AM5EX-78 Outward Opening Low Threshold

- Designed for door set manufacturers - can be installed as the fourth side of the door frame or retrofitted
- Complies with Part M of the building regulations when used in conjunction with the low threshold rear ramps
- Thermally broken to meet thermal bridging and insulation requirements
- Can be used with many different frame and door materials, e.g. wood, PVCu, fibreglass, aluminium, steel and carbon fibre
- Ideal for use with carpeted floors. Optional clip-in internal transition ramps also allow use with tiled or wooden floors
- Non-slip surfaces ensure a safe grip in wet conditions
- 8mm wider than AM5-70

1 Proline AM5EX-70 Low Threshold

FINISH	1m	2m	3m	BOX QTY.
SILVER	LTH51121	LTH51122	LTH51123	5
GOLD	LTH59121	LTH59122	LTH59123	5

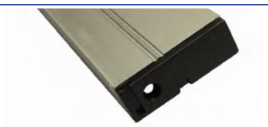

2 Sash Infill Bars

FINISH	1m	2m	3m	BOX QTY.
SILVER	LTH20451	LTH20511	LTH20541	20
GOLD	LTH20459	LTH20519	LTH20549	20

3 Frame Connectors

Please enquire with Sales for profile suitability

4 Low Threshold Front Ramps Extended 75mm

FINISH	1m	2m	3m	BOX QTY.
SILVER	LTH93111	LTH93121	LTH93131	5
GOLD	LTH93119	LTH93129	-	5

4 Low Threshold Front Ramps Low Version 49mm

FINISH	1m	2m	3m	BOX QTY.
SILVER	LTH90011	LTH90021	LTH90031	5
GOLD	LTH90019	LTH90029	LTH90039	5

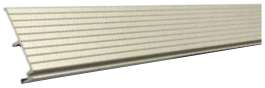

4 Low Threshold Rear Ramps

FINISH	1m	2m	3m	BOX QTY.
SILVER	LTH90111	LTH90121	LTH90131	5
GOLD	LTH90119	LTH90129	LTH90139	5

Sash Infill French Door Shootbolt End Cap

PART CODE		BOX QTY.
LTH21599		1

Note: Suits 45,51 & 54mm Infill bars

4 Low Threshold Shootbolt Keep

PART CODE		BOX QTY.
LTH220*1		1

* Please enquire with our sales team for profile suitability.

6 13mm Shootbolt Keep Plug Tidy

PART CODE		BOX QTY.
LTH23005		1

Slimline Low Threshold Sill For Inward Opening Doors

- For use with PVCu, composite and metal frames
- Designed to fit onto a subsill, directly onto a threshold or as a bottom side of a frame

For profile related blocks please call our sales team

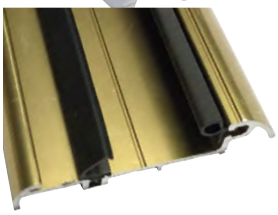

SIZE	GOLD	POLISHED CHROME
1000mm	LTH44018	LTH44012
1050mm	LTH44019	LTH44119
BOX QTY.	5	5

Rain Deflectors

- Rain deflectors to suit the Stormguard low thresholds

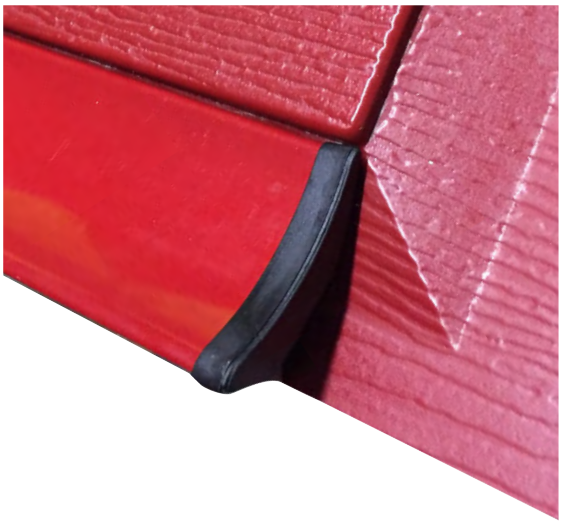

SIZE	WHITE	BLACK	BLUE	GREEN	RED
914mm	LTH91000	LTH91005	LTH91006	LTH91004	LTH91003
950mm	-	-		-	-
BOX QTY.	1	1	1	1	1

SIZE	GOLD	POLISHED GOLD	ALUMINIUM	POLISHED CHROME	MATT SILVER	BRUSHED STEEL
914mm	-	LTH91008	-	LTH91002	-	LTH91001A
950mm	LTH91009	-	LTH91001		LTH91007	-
BOX QTY.	20	1	1	1	50	50

TYPE	PET		LOCK-ING		PET SHOULDER HEIGHT UP TO (mm)						FINISH			SIZE WxH (mm)	ROUTING PREP (mm)		THICKNESS (mm)		BRAND	PART CODE	KEY	PAGE
	CAT	DOG	2-WAY	4-WAY	300	350	360	460	500	630	CLEAR	WHITE	BROWN	OVERALL	PANNEL CUT OUT	GLASS (dia)	DOOR PANNEL	GLAZING				
Maxi Dual 4-Way	•			•		•						•		304 dia	267 dia	267	3-28	3-28	Pet-Tek	CAF31000	1	280
Maxi Dual 4-Way	•			•		•					•			304 dia	267 dia	267	3-28	3-28	Pet-Tek	CAF31001	1	280
Maxi Slimline 4-Way	•			•		•						•		304 dia	267 dia	267	3-20	3-20	Pet-Tek	CAF32000	2	280
Maxi Slimline 4-Way	•			•		•					•			304 dia	267 dia	267	3-26	3-26	Pet-Tek	CAF32001	2	280
Multi Magnetic 4-Way	•			•	•							•		270 dia	245 dia	245	3-32	3-32	Pet-Tek	CAF34000	3	280
Medium 2-Way		•	•						•			•		415 x 430	385 dia	385	3-32	3-32	Pet-Tek	CAF33000	4	280
Medium 2-Way		•	•						•		•			415 x 430	385 dia	385	3-32	3-32	Pet-Tek	CAF33001	4	280
Microchip 4-Way	•			•			•					•		197 x 246	173 x 198		Up to 85		Pet Mate	CAF24000	5	281
Microchip Glass/Metal Panel Fitting Adapter Kit												•		263 dia	263 dia	263	Over 35	Over 35	Pet Mate	CAF24999	10	283
2-Way	•		•									•		192 x 200	165 x 174		50		Pet Mate	CAF23400	6	282
2-Way	•		•										•	192 x 200	165 x 174		50		Pet Mate	CAF23402	6	282
Glass Fitting 4-Way	•			•			•					•		245 dia		223	Up to 30	Up to 30	Pet Mate	CAF21000	7	282
4-Way	•			•								•		192 x 200	165 x 174		50		Pet Mate	CAF23500	8	282
4-Way	•			•									•	192 x 200	165 x 174		50		Pet Mate	CAF23502	8	282
Large Cat/ Small Dog 4-Way	•	•		•			•					•		235 x 252	210 x 227		Up to 50		Pet Mate	CAF22100	9	282
Large Cat/ Small Dog 4-Way	•	•		•			•						•	235 x 252	210 x 227		Up to 50		Pet Mate	CAF22102	9	282
Magnetic 4-Way	•			•			•					•		195 x 242	168 x 219		60		Pet Mate	CAF20200	11	283
Magnetic 4-Way	•			•			•						•	195 x 242	168 x 219		60		Pet Mate	CAF20202	11	283
Medium 2-Way		•	•					•				•		290 x 350	242 x 300		Up to 50		Pet Mate	CAF21500	12	283
Medium 2-Way		•	•					•					•	290 x 350	242 x 300		Up to 50		Pet Mate	CAF21502	12	283
Large 2-Way		•	•							•		•		366 x 441	318 x 391		Up to 50		Pet Mate	CAF21600	13	283

PET-TEK INTERNATIONAL LTD

Glass Fitting Maxi Dual Glaze Pet Door

1

- Generous flap size to accommodate large cats and small dogs
- Suitable for pet shoulder heights up to 350mm
- Quiet, self-closing flap with magnetic location
- Suitable for double glazed units
- Secure - made from strong polycarbonate, with 4-way locking, additional pin and no external screws
- 3 year limited guarantee

Flap Size: 195 x 185mm
Overall Size: 304mm diameter
Cut Out Size: 267mm diameter
Glazing Thickness: 3-28mm

WHITE	CLEAR	BOX QTY.
CAF31000	CAF31001	1

3 YEAR WARRANTY

PET-TEK INTERNATIONAL LTD

Glass Fitting Maxi Slimline Pet Door

2

- Generous flap size to accommodate large cats and small dogs
- Suitable for pet shoulder heights up to 350mm
- Slim profile making it suitable for sliding windows and doors
- Quiet, self-closing flap with magnetic location
- Secure - made from strong polycarbonate, with 4-way locking, additional pin and no external screws
- 3 year limited guarantee

Flap Size: 195 x 185mm
Overall Size: 304mm diameter
Cut Out Size: 267mm diameter
Glazing Thickness: 3-20mm

WHITE	CLEAR	BOX QTY.
CAF32000	CAF32001	1

3 YEAR WARRANTY

PET-TEK INTERNATIONAL LTD

Glass Fitting Multi Magnetic Cat Door

3

- Medium sized cat flap suitable for double glazed units
- Suitable for pet shoulder heights up to 300mm
- Multi magnetic system keeps out strays and saves money on batteries
- Secure - made from strong polycarbonate, with 4-way locking
- Self closing flap with magnetic location
- 3 year limited guarantee

Flap Size: 170 x 155mm
Overall Size: 270mm diameter
Cut Out Size: 245mm diameter
Glazing Thickness: 3-26mm

WHITE	BOX QTY.
CAF34000	1

3 YEAR WARRANTY

PET-TEK INTERNATIONAL LTD

Glass Fitting Medium Sized Dog Door

4

- Generous flap size to accommodate medium to semi-large dogs
- Suitable for pet shoulder heights between 450-500mm
- Suitable for single- or double-glazed doors and most sliding windows
- Comes with locking dials for extra security when away from home
- Supplied with weather seal to reduce draughts
- 3 year limited guarantee

Flap Size: 300 x 270mm
Overall Size: 415 x 430mm
Cut Out Size: 385mm diameter
Glazing Thickness: 3-32mm

WHITE	CLEAR	BOX QTY.
CAF33000	CAF33001	1

3 YEAR WARRANTY

4-Way Locking Microchip Cat Flap

5

PET MATE

This cat flap from Pet Mate gives your feline friend VIP access to your home, ensuring they're free to come and go as they please while keeping other cats out. This cat door will only permit access when it detects your pet's implanted microchip or unique I.D. disc. You can register up to 30 cats and programming is simple at the touch of a button. The generous entrance way will comfortably accommodate small to medium sized cats, while the clear flap lets them look out and satisfy their curious nature.

- Keeps stray pets out - entry controlled by your cat's unique microchip or Cat Mate I.D. Disc (available separately)
- Easy to program at the push of a button. The LED indicator flashes when your cat's microchip or I.D. disc is successfully registered. Suitable for up to 30 cats
- Compatible with all common microchips (15 digit ISO)†
- Takes 4 x AA batteries (not included) to give approximately 12-months operation
- Self-lining to 85mm (3 3/8") thick – ideal for all doors including metal.*
- Easily fitted to glass panels with adapter kit.*
- Cat-friendly transparent flap made from durable polymer
- Draft and weatherproof fully brush sealed flap with magnetic closure
- Easy to use, rotary 4-way lock.
- 3-year guarantee

Cut Out Size: W 173mm x H 198mm
Overall Size: W 197mm x H 246mm

WHITE	BOX QTY.
CAF24000	1

† Please note: microchips with 10 digits and lettered characters are not currently compatible with this cat flap.
* Glass panels or metal panels over 35mm (1 3/8") thick require an adapter kit (available separately see page 283)

PET MATE® 2-Way Locking Cat Flap

6

- Door liners: make fitting easy by neatly covering the cut hole
- Silent action: will not frighten your pet or disturb you
- Draught and weatherproof brush-sealed flap with magnetic closure
- Top quality design and materials throughout. The robust construction enables Petmate to confidently offer a 3 year limited guarantee

NB: The complete range fits into door panels up to 30mm thick.

Overall Size: W 192mm x H 200mm
Cut Out Size: W 165mm x H 174mm

WHITE	BROWN	BOX QTY.
CAF23400	CAF23402	1

PET MATE® Glass Fitting Cat Flap

7

- Self lining to 1 1/4" (30mm) thick - ideal for single/double glazing and any panel from 0-30mm thick
- Easy to use 4-way lock
- 3 year limited guarantee

NB: It is not possible to cut holes in toughened glass or double glazed units except at time of manufacture

Overall Size: 245mm
Cut Out Size: 223mm diameter

WHITE	BOX QTY.
CAF21000	1

PET MATE® 4-Way Locking Cat Flap

8

- Self lining to 2" (50mm) thick - ideal for all doors, very thin panels and screens
- Easy to use 4-way lock for greater control of cat
- This product gives the convenience of 4-way locking control with a trimmable door liner for neat, easy installation in most applications
- 3 year limited guarantee

Overall Size: W 192mm x H 200mm
Cut Out Size: W 165mm x H 174mm

WHITE	BROWN	BOX QTY.
CAF23500	CAF23502	1

PET MATE® 4-Way Locking Large Cat Flap/Small Dog Door

9

- Self lining to 2" (50mm) thick - ideal for all doors, very thin panels and screens
- Easy to use 4-way lock for greater control of cat
- Easy replacement for most popular cat flaps
- Specifically designed for the largest cats or small dogs up to a shoulder hieight of 14" (360mm)
- 3 year limited guarantee

Overall Size: W 235mm x H 252mm
Cut Out Size: W 210mm x H 227mm

WHITE	BROWN	BOX QTY.
CAF22100	CAF22102	1

Adapter Kit for Glass or Metal Panels

PET MATE

10

This paintable adapter kit enables easy installation of the Pet Mate 4-Way Locking Microchip Cat Flap (see page 281) into glass panels or metal panels over 35mm thick.

Overall Size: 263mm diameter
Cut Out Size: 263mm diameter

NB: It is not possible to cut holes in toughened glass or double glazed units except at time of manufacture

WHITE	BOX QTY.
CAF24999	1

Electro Magnetic Cat Flap

PET MATE

11

- Keeps stray pets out
- Includes 2 super compact collar magnets
- Easy to use 4-way lock
- Self lining to 2 3/8" (60mm) thick - ideal for all doors
- 3 year limited guarantee
- Additional magnets to suit sold seperatley

NB: Electro magnetic cat flaps are not suitable for very small kittens

Overall Size: W 195mm
H 242mm
Cut Out Size: W 168mm
H 219mm

WHITE	BROWN	BOX QTY.
CAF20200	CAF20202	1
Additional Collar Magnets		
CAF25700	-	Pack of 2

3 Year Guarantee · Jahre Garantie · Jaar Garantie · Ans Garantie · Años Garantie

Medium Dog Door

PET MATE

12

- The robust construction and security locking panel are popular features of all Dog Mate doors
- Self lining to 2" (50mm) thick - ideal for all doors and walls
- Robust security locking panel
- Silent action weatherproof flap with vision panel
- Lightweight flap may be used by cats
- Suitable for dogs up to 18" (460mm) shoulder height
- 3 year limited guarantee

Overall Size: W 290mm x H 350mm
Cut Out Size: W 242mm x H 300mm

WHITE	BROWN	BOX QTY.
CAF21500	CAF21502	1

3 Year Guarantee · Jahre Garantie · Jaar Garantie · Ans Garantie · Años Garantie

Large Dog Door

PET MATE

13

- The robust construction and security locking panel are popular features of all Dog Mate doors
- Self lining to 2" (50mm) thick - ideal for all doors and walls
- Robust security locking panel
- Silent action weatherproof flap with vision panel
- Lightweight flap may be used by cats
- Suitable for dogs up to 25" (630mm) shoulder height
- 3 year limited guarantee

Overall Size: W 366mm x H 441mm
Cut Out Size: W 318mm x H 391mm

WHITE	BOX QTY.
CAF21600	1

3 Year Guarantee · Jahre Garantie · Jaar Garantie · Ans Garantie · Años Garantie

High performance multipoint door locking sytems

- Largest opposing chamferred security hooks in the UK
- 25mm centre bolt for class-leading compression.
- Fully adjustable security keeps
- Secured by Design accredited. Tested to PAS 24 & BS6375
- Range suits PVCu & composite door applications

AVANTIS®
More than manufacturing

See pages 129-132

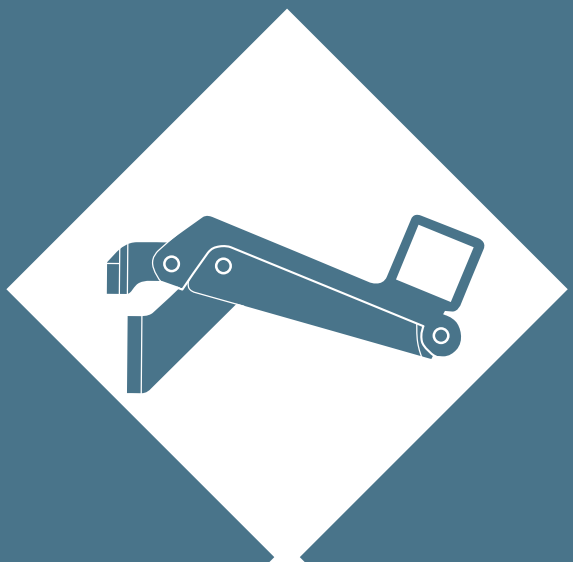

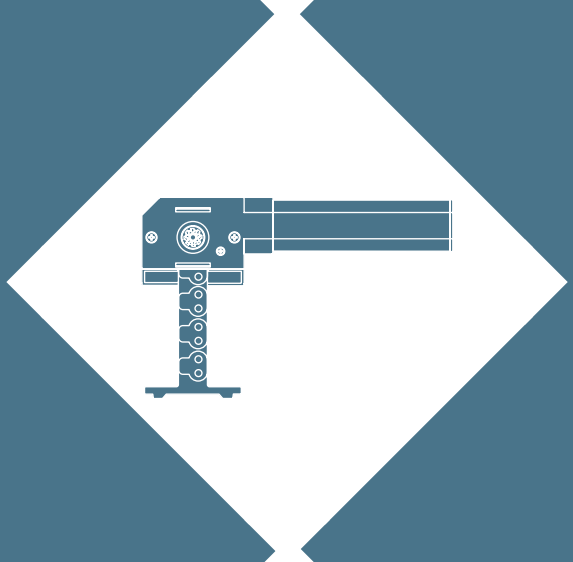

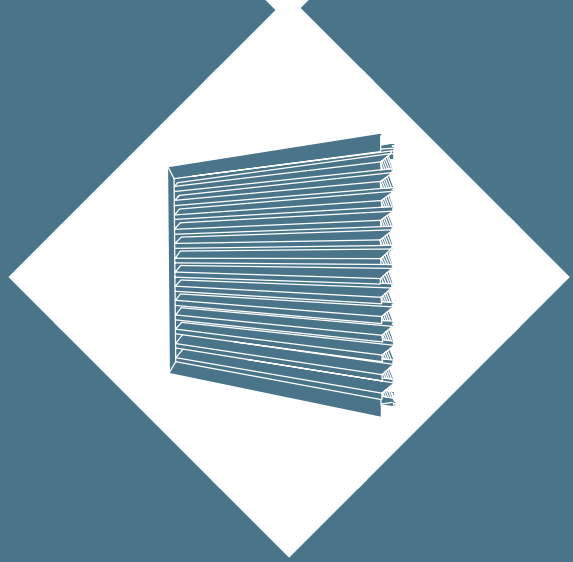

Friction Hinges	**286-299**
For Triple Glazing	294 & 299
Kore	287-289
Cotswold	290-294
Securistyle	295-298
Trojan	299
Espagnolette Bars	**300**
Kenrick	300
Restrictors	**301-304**
Cotswold	302
Cubelock	303
Kore	304-305
JJ Banks	304
Yale	305
Cockspur Handles	**306-307**
Trojan	307
Securistyle	307
Espagnolette Handles	**306 & 308-309**
Trojan	308
Securistyle	308
Regal	309
Herritage Hardware	**309**
Regal Espagnolete Handles	309
Folding Openers	**310-313**
Caldwell	310-311
Strand Duoflex	312-313
Highline Window Controls	**314-327**
Manual Controls	314-321
Electrical Controls	322-326
Order/Quote Form	327
Ventilation	**328-331**
Trickle Vents	328
Over Glass/Glazed-in	329
Louvres	330-331
Patio Rollers	**332**
Bi-fold Multipoint Door Locks	**333-336**
Bi-fold Gear	**337-343**
Push Bars	**344-346**
Strand	344
Yale	345
Omec	346
Door Handles	**347-353**
Profile Cylinders	**354-361**
Letterplates	**362-365**
Cabin Hooks & Door Chains	**366**

HINGE TYPE	POSITION		SIZE (INCH)								STACK HEIGHT (mm)			MAX WEIGHT	OPENING ANGLE	BRAND	PAGE
	TOP	SIDE	6	8	10	12	13	16	20	24	13	16	17				
Slimline	•			•	•	•		•	•	•			•	12-35kg	37.5-80º	Securistyle	296
		•			•			•					•	22-24kg	60º	Securistyle	296
Standard	•			•	•	•		•	•	•	•		•	10-50kg	38-62º	Cotswold	290
	•			•	•	•		•	•	•	•	•		10-50kg	38-87º	Kore	287
	•		•	•	•	•		•	•	•	•		•	10-35kg	37.5-80º	Securistyle	295
		•				•		•			•		•	20, 26kg	51-60º	Cotswold	290
		•				•		•			•	•		18, 24kg	84º, 87º	Kore	287
		•				•		•			•		•	22, 24kg	60º	Securistyle	295
Restricted	•					•		•			•		•	20, 24kg	48º, 59º	Cotswold	291
	•					•		•	•	•	•		•	20-35kg	37.5-65º	Securistyle	297
		•				•		•	•	•	•		•	20-32kg	45-59º	Cotswold	291
		•				•		•			•		•	22, 24kg	60º	Securistyle	297
Egress Only		•			•			•			•		•	21kg	85-90º	Cotswold	292
		•				•		•			•		•	16-22kg	84-88º	Kore	288
		•		•							13.5	16.5		33kg	90º	Trojan	299
Egress Easy Clean		•			•			•			•		•	21kg	80-84º	Cotswold	293
		•				•		•			•		•	18-21kg	80-88º	Kore	289
		•				•		•			•	•	•	22, 24kg	80º, 90º	Securistyle	298
Mega Egress Only		•		•							13.5	16.5		33kg	90º	Trojan	299
Egress Easy Clean Extreme		•				•		•			•		•	30-35kg	85º	Cotswold	294
Mega Egress Easy Clean		•					•				13.5	16.5		40kg	90º	Trojan	299

CORROSION 10 year GUARANTEE

Kore Standard Friction Hinges

- Manufactured from 430 grade stainless steel
- Standard range available in 8, 10, 12, 16, 20 & 24 inch top hung and 12 & 16 inch side hung
- 18mm track width

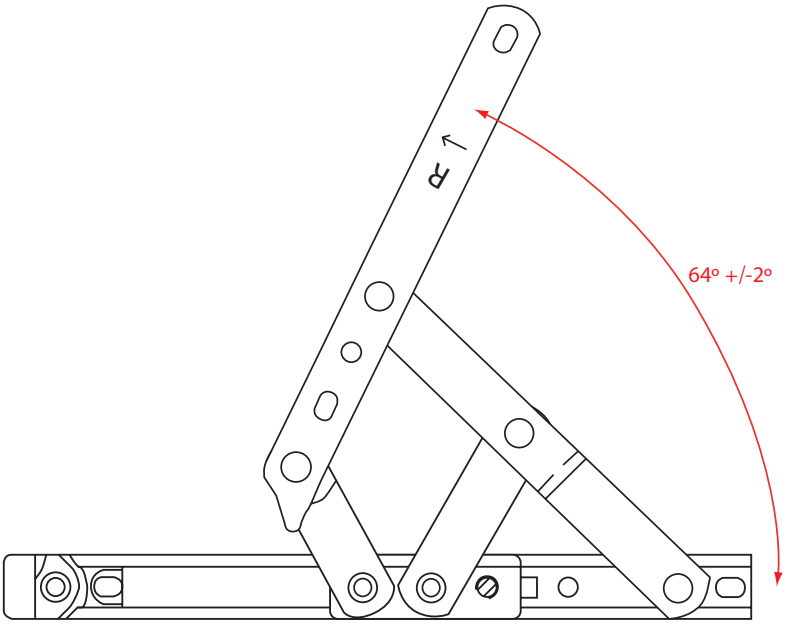

TYPE	SIZE	MAX VENT			OPENING	STACK HEIGHT		BOX QTY.
		WEIGHT	WIDTH	HEIGHT	ANGLE	13mm	16mm	
Top Hung	8 inch	10kg	1200mm	300mm	64º	HIN31208	HIN31408	25 Pairs
Top Hung	10 inch	16kg	1200mm	450mm	86º	HIN31210	HIN31410	25 Pairs
Top Hung	12 inch	21kg	1200mm	600mm	87º	HIN31212	HIN31412	25 Pairs
Top Hung	16 inch	22kg	1200mm	750mm	84º	HIN31216	HIN31416	25 Pairs
Top Hung	20 inch	24kg	1200mm	900mm	42º	HIN31220	HIN31420	25 Pairs
Top Hung	24 inch	50kg	1200mm	1500mm	38º	HIN31224	HIN31424	25 Pairs
Side Hung	12 inch	18kg	650mm	1250mm	87º	HIN32212	HIN32412	25 Pairs
Side Hung	16 inch	24kg	700mm	1300mm	84º	HIN32216	HIN32416	25 Pairs

Kore Egress Only Friction Hinges

CORROSION 10 year GUARANTEE

- All hinges achieved BS 6375-2 and all hinges tested to Class 2 - 10,000 cycles
- Manufactured from 430 grade stainless steel
- Egress versions open to 85º (12'') or 90º (16'') providing clear egress in excess of 500mm on a 600mm wide vent
- 18mm track width

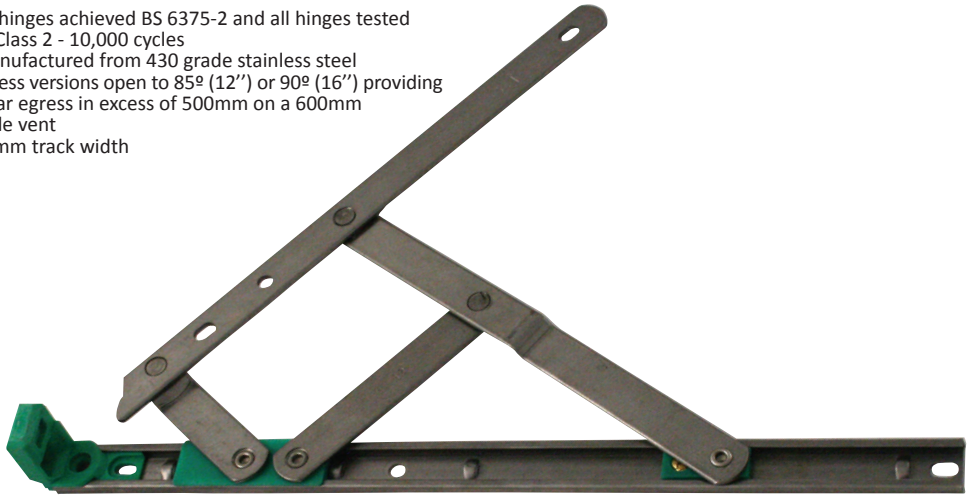

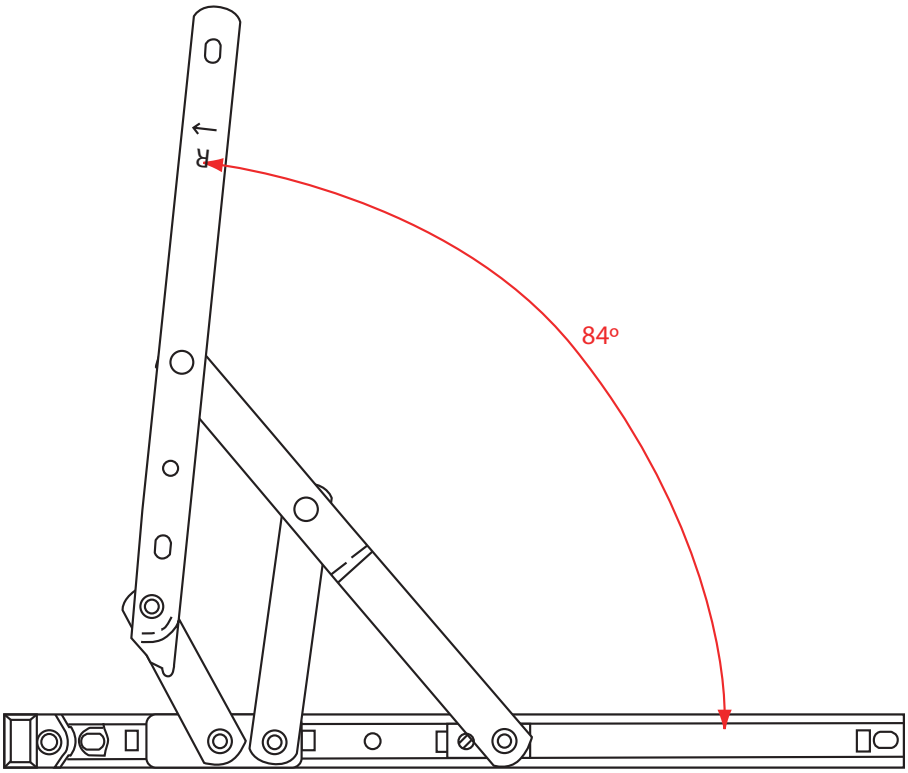

TYPE	SIZE	MAX VENT			OPENING ANGLE	STACK HEIGHT		BOX QTY.
		WEIGHT	WIDTH	HEIGHT		13mm	17mm	
Side Hung	12 inch	16kg	600mm	1250mm	84º	HIN52612	HIN52712	25 Pairs
Side Hung	16 inch	22kg	650mm	1300mm	88º	HIN52616	HIN52716	25 Pairs

CORROSION 10 year GUARANTEE

Kore Egress Easy Clean Friction Hinges

- All hinges achieved BS 6375-2 and all hinges tested to Class 2 - 10,000 cycles
- Manufactured from 430 grade stainless steel
- Egress versions open to 85º (12'') or 90º (16'') providing clear egress in excess of 500mm on a 600mm wide vent
- Patented easy clean mechanism allows window to slide across without the need to operate any awkward buttons
- 18mm track width

EASY CLEAN FUNCTION

1

3

2

4

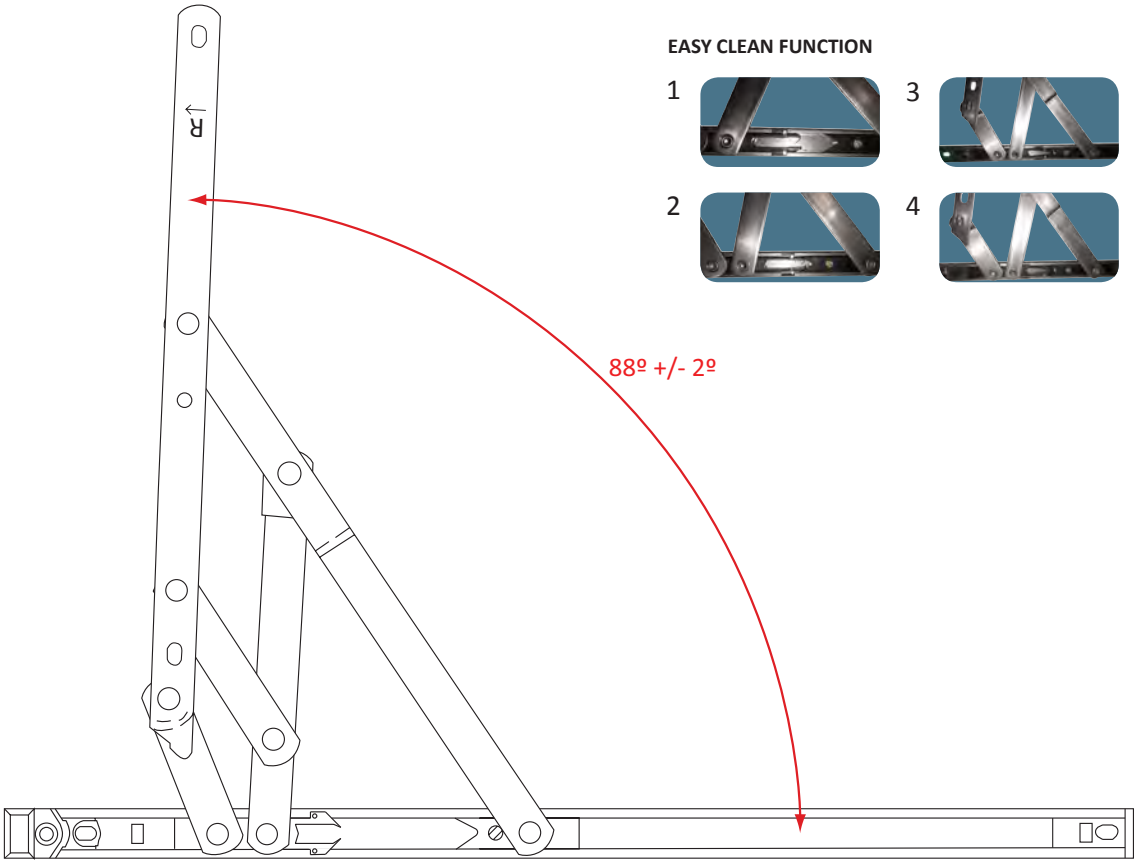

TYPE	SIZE	MAX VENT			OPENING ANGLE	STACK HEIGHT		BOX QTY.
		WEIGHT	WIDTH	HEIGHT		13mm	17mm	
Side Hung	12 inch	18kg	600mm	1200mm	80º	HIN52612EC	HIN52712EC	25 Pairs
Side Hung	16 inch	21kg	700mm	1300mm	88º	HIN52616EC	HIN52716EC	25 Pairs

Cotswold
Architectural Products

Sinidex Standard Friction Hinges

10 YEAR GUARANTEE

BBA Approved

- BBA approved, conforms to BS 6375 parts 1 & 2 proven to a lifetime 30,000 cycle guarantee
- Corrosion resistant to BS 7479, manufactured using ferritic 430 stainless steel
- Salt spray tested to 240 hours Grade 4 BS EN 1670
- 18mm track width
- 10 year guarantee

Standard friction hinges
10” shown

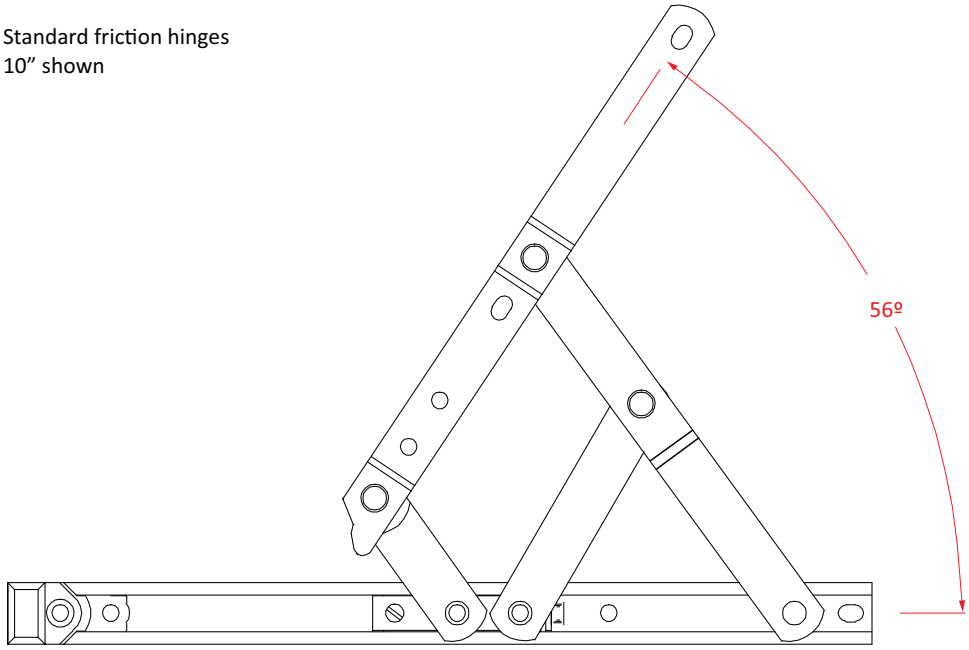

TYPE	SIZE	MAX VENT			OPENING	STACK HEIGHT		BOX QTY.
		WEIGHT	WIDTH	HEIGHT	ANGLE	13mm	17mm	
Top Hung	8 inch	10kg	1200mm	300mm	62º	HIN06108	HIN07108	50 Pairs
Top Hung	10 inch	16kg	1200mm	450mm	56º	HIN06110	HIN07110	50 Pairs
Top Hung	12 inch	21kg	1200mm	600mm	64º	HIN06112	HIN07112	25 Pairs
Top Hung	16 inch	22kg	1200mm	750mm	51º	HIN06116	HIN07116	25 Pairs
Top Hung	20 inch	24kg	1200mm	900mm	42º	HIN06120	HIN07120	25 Pairs
Top Hung	24 inch	50kg	1200mm	1500mm	38º	HIN06124	HIN07124	25 Pairs
Side Hung	12 inch	20kg	650mm	1250mm	60º	HIN06212	HIN07212	25 Pairs
Side Hung	16 inch	26kg	700mm	1300mm	51º	HIN06216	HIN07216	25 Pairs

10 YEAR GUARANTEE

BBA Approved

Sinidex Restricted Friction Hinges

Cotswold Architectural Products

- BBA approved friction stay range assessment no. 50151B
- Tested to BS 6375 Part 2 1987 to withstand a force of 600N when opened at the restricted position
- Restricted to 100mm opening
- Corrosion resistant to BS 7479, manufactured using ferritic 430 stainless steel
- 18mm track width
- 10 year guarantee

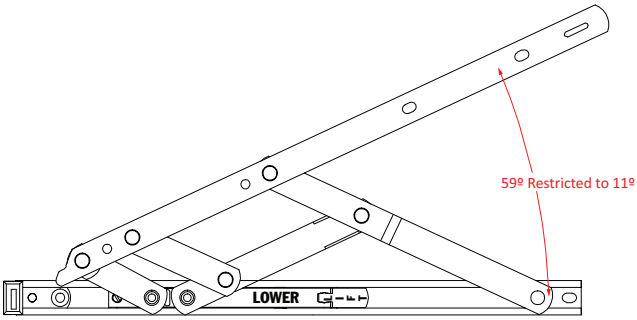

Top view of fourth arm vent fixing holes.

All Dimensions in mm

Restricted Operation

1 To release the restricted mechanism, (A) pull the window towards you slightly, (B) gently lift the restrictor catch and push the window open
2 Pull the window fully closed to activate the automatic re-set facility

A

B

TYPE	SIZE	MAX VENT			OPENING	RESTRICTED	13mm STACK HEIGHT		BOX QTY.
		WEIGHT	WIDTH	HEIGHT	ANGLE	ANGLE	LEFT HAND	RIGHT HAND	
Top/Side Hung	12 inch	20kg	1200mm	600mm	59º	11º	HIN06512L	HIN06512R	50 Each
Top/Side Hung	16 inch	24kg	1200mm	750mm	48º	10º	HIN06516L	HIN06516R	50 Each
Side Hung	20 inch	24kg	1200mm	900mm	45º	8.5º	HIN06520L	HIN06520R	50 Each
Side Hung	24 inch	32kg	1200mm	1200mm	45º	7.6º	HIN06524L	HIN06524R	50 Each
							17mm STACK HEIGHT		
Top/Side Hung	12 inch	20kg	1200mm	600mm	59º	11º	HIN07512L	HIN07512R	50 Each
Top/Side Hung	16 inch	24kg	1200mm	750mm	48º	10º	HIN07516L	HIN07516R	50 Each
Side Hung	20 inch	24kg	1200mm	900mm	45º	8.5º	HIN07520L	HIN07520R	50 Each
Side Hung	24 inch	32kg	1200mm	1200mm	45º	7.6º	HIN07524L	HIN07524R	50 Each

Cotswold Architectural Products

Sinidex Egress Only Friction Hinge

10 YEAR GUARANTEE

BBA Approved

- All hinges achieved BS 6375-2 and all hinges tested to Class 2 - 10,000 cycles
- Manufactured from 430 grade stainless steel
- Egress versions open to 85º (12'') or 90º (16'') providing clear egress in excess of 500mm on a 600mm wide vent
- 18mm track width

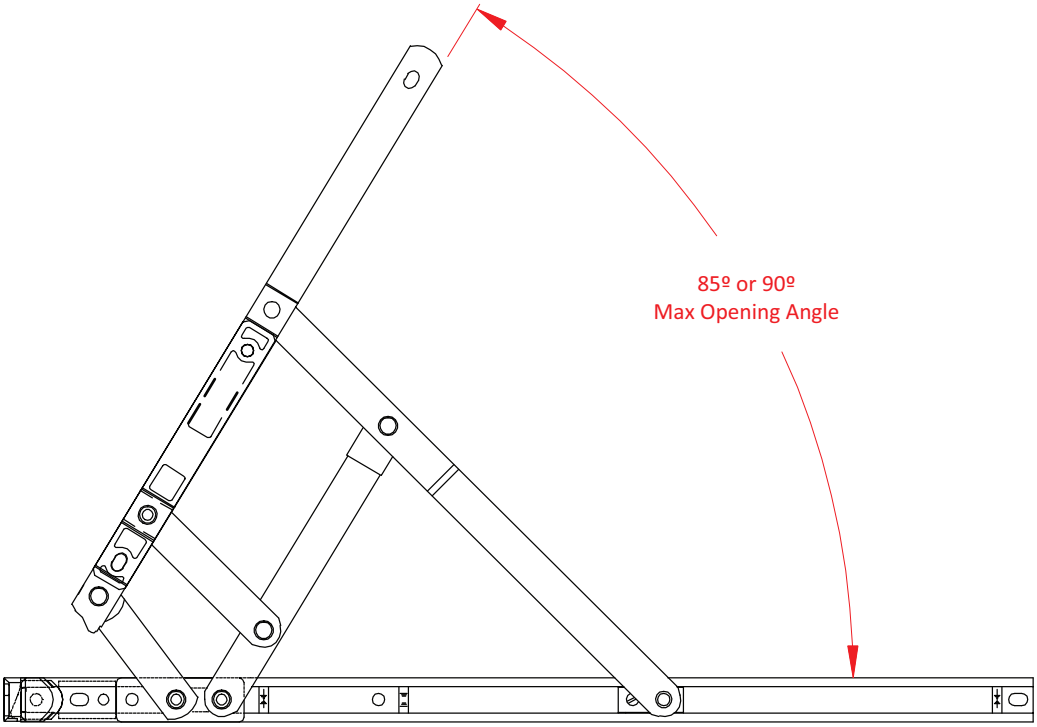

TYPE	SIZE	MAX VENT			OPENING ANGLE	STACK HEIGHT		BOX QTY.
		WEIGHT	WIDTH	HEIGHT		13mm	17mm	
Side Hung	10 inch	21kg	600mm	1200mm	85º	HIN06410	HIN07410	50 Pairs
Side Hung	16 inch	21kg	600mm	1200mm	90º	HIN06416	HIN07416	25 Pairs

10 YEAR GUARANTEE

BBA Approved

Sinidex Egress Easy Clean Friction Hinges

Cotswold Architectural Products

- BBA approved friction stay range assessment no. 50151B
- Corrosion resistant to BS 7479, manufactured using ferritic 430 stainless steel
- Egress versions open to 85º (10'') or 90º (16'') providing clear egress in excess of 500mm on a 600mm wide vent
- 18mm track width
- 10 year guarantee

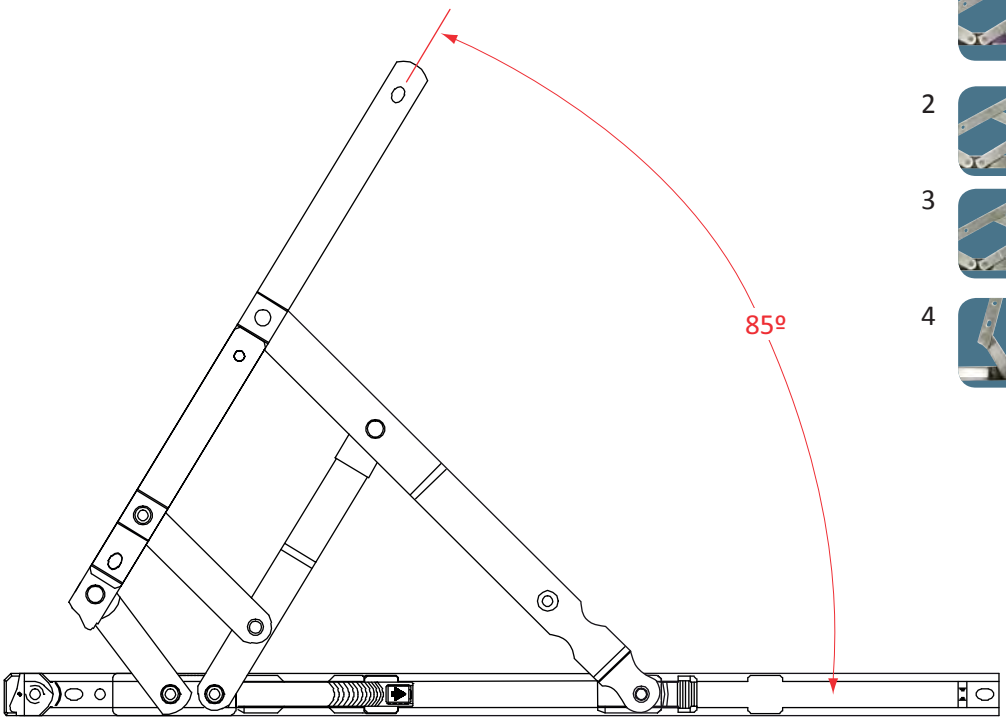

Easy Clean Function

1

2

3

4

TYPE	SIZE	MAX VENT			OPENING ANGLE	STACK HEIGHT		BOX QTY.
		WEIGHT	WIDTH	HEIGHT		13mm	17mm	
Side Hung	10 inch	21kg	600mm	1200mm	80º	HIN06412EC	HIN07412EC	50 Pairs
Side Hung	16 inch	21kg	600mm	1200mm	84º	HIN06416EC	HIN07416EC	25 Pairs

Cotswold Architectural Products

Sinidex Egress Easy Clean Extreme Friction Hinges

10 YEAR GUARANTEE

BBA Approved

Suitable for triple glazing

- BBA approved friction stay range assessment no. 50151B
- Corrosion resistant to BS 7479
- Increased weight carrying capabilities on both 12” (30kg) & 16” (35kg) hinges
- Patented operation using purple slider to achieve easy clean function
- 18mm track width
- 10 year guarantee

Easy Clean Function

1

2

3

4

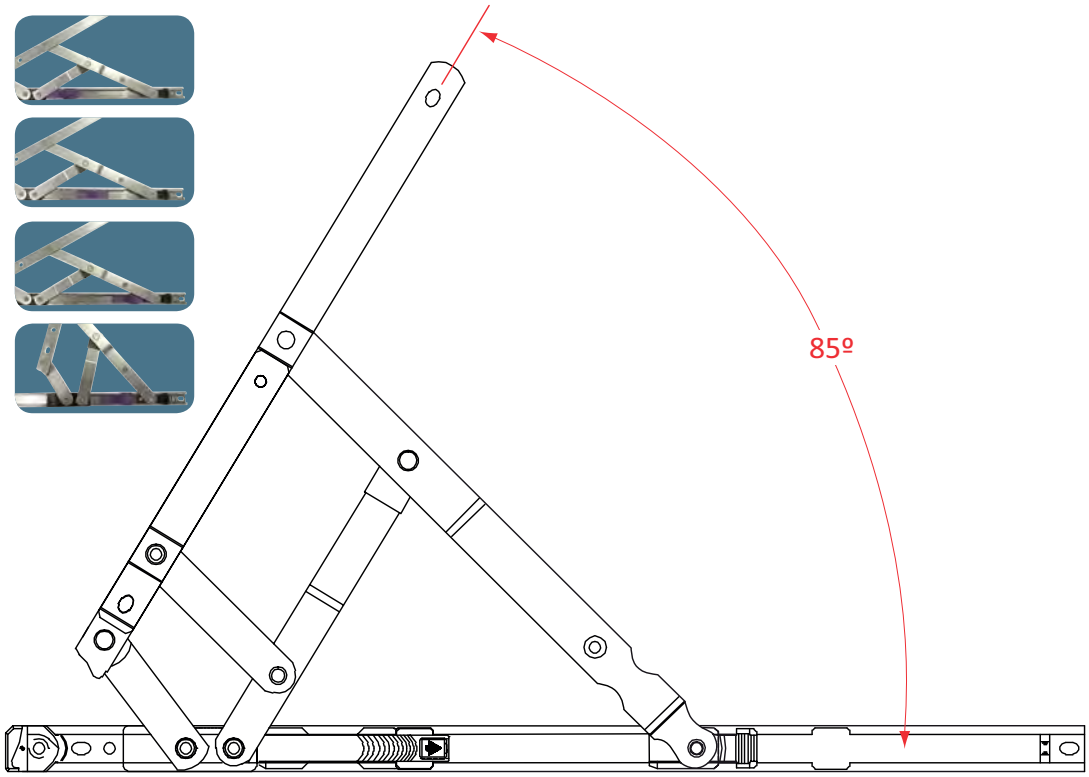

TYPE	SIZE	MAX VENT		OPENING ANGLE	STACK HEIGHT		BOX QTY.
		WEIGHT	WIDTH		13mm	17mm	
Side Hung	12 inch	30kg	700mm	85º	HIN06412ECEX	HIN07412ECEX	25 Pairs
Side Hung	16 Inch	35kg	800mm	85º	HIN06416ECEX	HIN07416ECEX	25 Pairs

10 YEAR GUARANTEE

BBA Approved

Defender Friction Hinge

securistyle

- A foolproof locating system for reliable, accurate closure
- Effective weather-proofing and draught-proofing
- Smooth operation
- 10 year mechanical guarantee
- 18mm track width

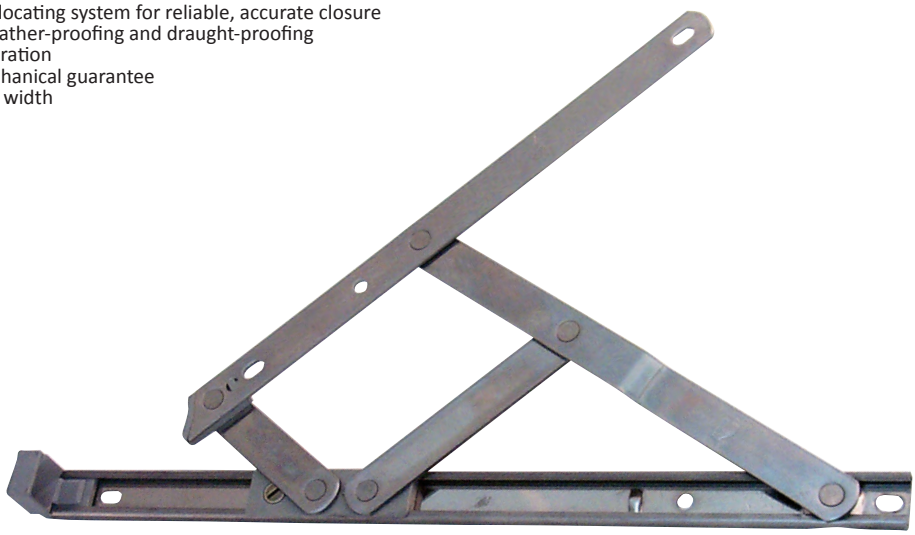

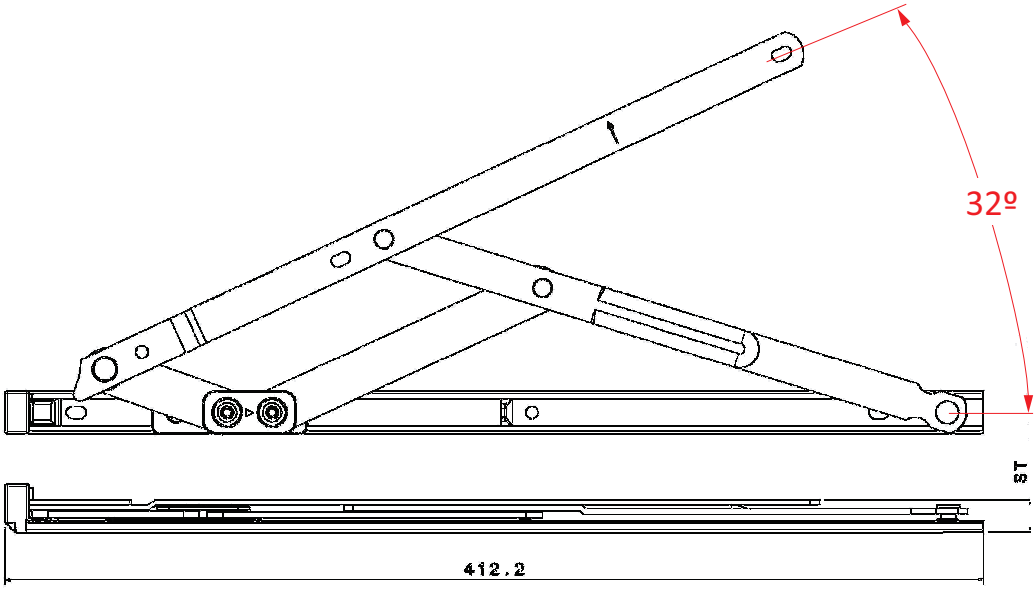

TYPE	SIZE	MAX VENT			OPENING	STACK HEIGHT		BOX QTY.
		WEIGHT	WIDTH	HEIGHT	ANGLE	13mm	17mm	
Top Hung	6 inch	10kg	300mm	150mm	50º	HIN81206	-	50 Pairs
Top Hung	8 inch	12kg	350mm	200mm	50º	HIN81208	HIN81408	25 Pairs
Top Hung	10 inch	16kg	400mm	275mm	80º	HIN81210	HIN81410	25 Pairs
Top Hung	12 inch	20kg	550mm	350mm	80º	HIN81212	HIN81412	25 Pairs
Top Hung	16 inch	21kg	750mm	500mm	80º	HIN81216	HIN81416	25 Pairs
Top Hung	20 inch	24kg	1000mm	700mm	50º	HIN81220	HIN81420	25 Pairs
Top Hung	24 inch	35kg	1200mm	850mm	37.5º	HIN81224	HIN81424	25 Pairs
Side Hung	12 inch	22kg	600mm	300mm	60º	HIN82212	HIN82412	25 Pairs
Side Hung	16 inch	24kg	700mm	400mm	60º	HIN82216	HIN82416	25 Pairs

Defender Slimline Friction Hinge

10 YEAR GUARANTEE

This Securistyle slimline friction hinge provides a reliable and accurate closure of the window, as well as effective weather and draught proofing.

Features:
- Smooth operation
- World's best selling domestic friction hinge
- 15mm track width

Variations:
- Defender highline variants for deeper profiles with cavities between 16mm and 18.5mm
- Defender slimline, engineered for narrow profile channels

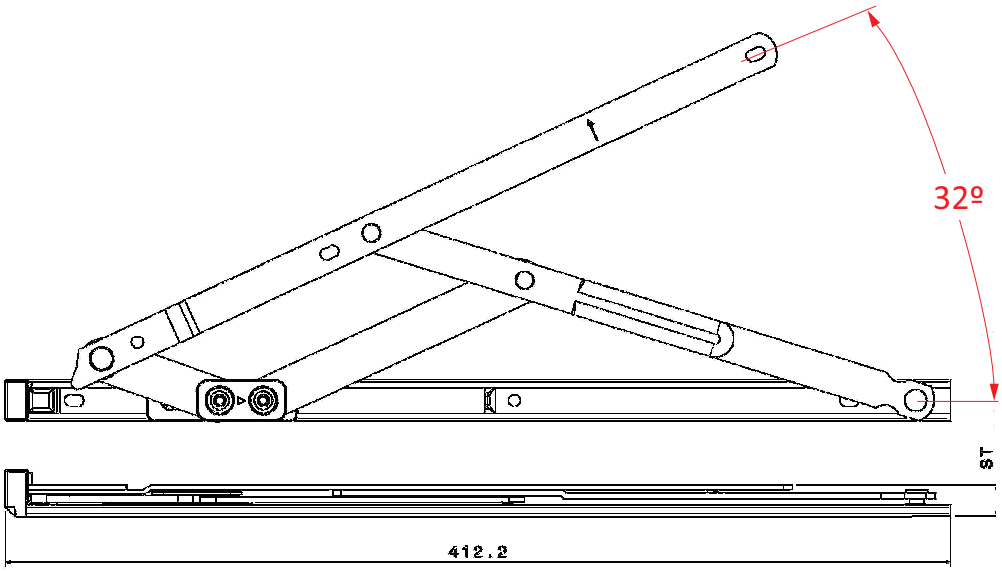

TYPE	SIZE	MAX VENT WEIGHT	MAX VENT WIDTH	MAX VENT HEIGHT	OPENING ANGLE	STACK HEIGHT 17mm	BOX QTY.
Top Hung	8 inch	12kg	350mm	200mm	50º	HIN81508	25
Top Hung	10 inch	16kg	400mm	275mm	80º	HIN81510	25
Top Hung	12 inch	20kg	550mm	350mm	80º	HIN81512	25
Top Hung	16 inch	21kg	750mm	500mm	80º	HIN81516	25
Top Hung	20 inch	24kg	1000mm	700mm	50º	HIN81520	25
Top Hung	24 inch	35kg	1200mm	850mm	37.5º	HIN81524	25
Side Hung	10 inch	22kg	600mm	300mm	60º	HIN82512	25
Side Hung	16 inch	24kg	700mm	400mm	60º	HIN82516	25

10 YEAR GUARANTEE

BBA Approved

Defender Restricted Friction Hinge

securistyle

- Built-in child-resistant mechanism limits opening to a maximum of 100mm in the restricted position
- Tested to BS 6375 to withstand a force of 600N when opened to its restricted position
- Built in quick release levers allow window to be fully opened for easy cleaning, total ventilation or emergency escape
- Restrictor mechanism automatically relocates and resets as the window is closed
- On side hung applications, only the bottom restrictor hinge needs fitting to satisfy the requirements of BS 6375 Part 2
- 18mm track width
- 10 year mechnical guarantee

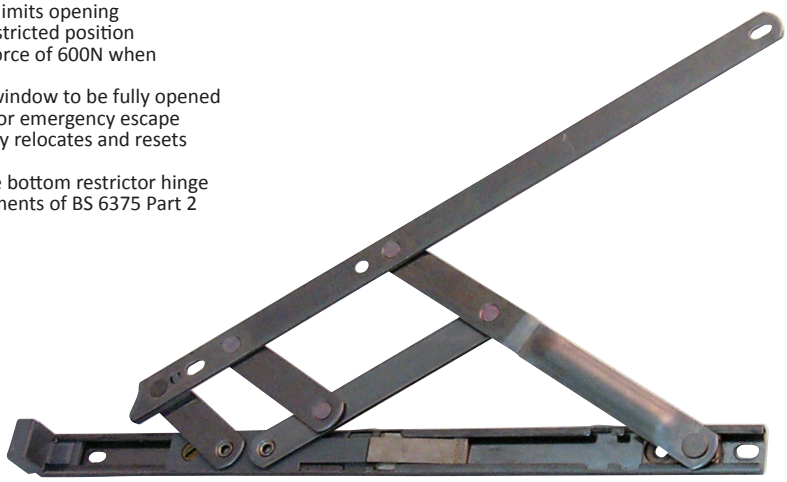

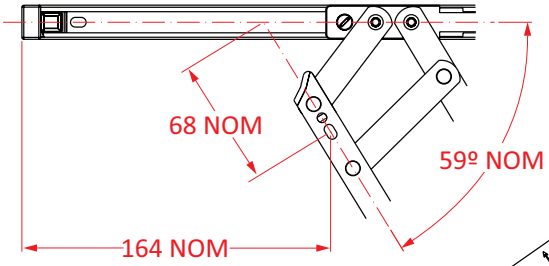

Hinge Project Out Dimension

Restricted Operation

1

2

3

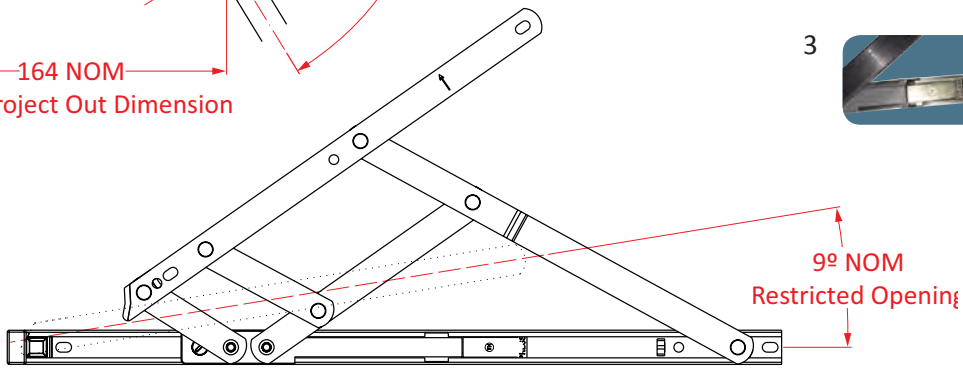

TYPE	SIZE	MAX VENT			OPENING	RESTRICTED	STACK HEIGHT		BOX QTY.
		WEIGHT	WIDTH	HEIGHT	ANGLE	ANGLE	13mm	17mm	
Top Hung	12 inch	20kg	550mm	350mm	65º	15º	HIN81812	HIN81812H	25 Pairs
Top Hung	16 inch	21kg	750mm	500mm	60º	10º	HIN81816	HIN81816H	25 Pairs
Top Hung	20 inch	24kg	1000mm	700mm	50º	8º	HIN81820	HIN81820H	25 Pairs
Top Hung	24 inch	35kg	1200mm	850mm	37.5º	7º	HIN81824	HIN81824H	25 Pairs
Side Hung - LH	12 inch	22kg	600mm	300mm	60º	13º	HIN82812	HIN82812H	50 Each
Side Hung - RH	12 inch	22kg	600mm	300mm	60º	13º	HIN83812	HIN83812H	50 Each
Side Hung - LH	16 inch	24kg	700mm	400mm	60º	12º	HIN82816	HIN82816H	50 Each
Side Hung - RH	16 inch	24kg	700mm	400mm	60º	12º	HIN83816	HIN83816H	50 Each
Side Hung	16 inch	24kg	700mm	400mm	60º	12º	-	HIN84816H	25 Pairs
Side Hung	16 inch	24kg	700mm	400mm	60º	12º	-	HIN85816H	25 Pairs

Defender Egress Easy Clean Friction Hinge

10 YEAR GUARANTEE

BBA Approved

- Unique controllable friction device eliminates need for a peg stay to hold the window open
- Unique locating system for reliable closing
- Built-in second slider – invisible when the window is closed – gives easy clean facility at the press of a lever
- 18mm track width
- 10 year mechanical guarantee

Easy Clean Function

1

2

3

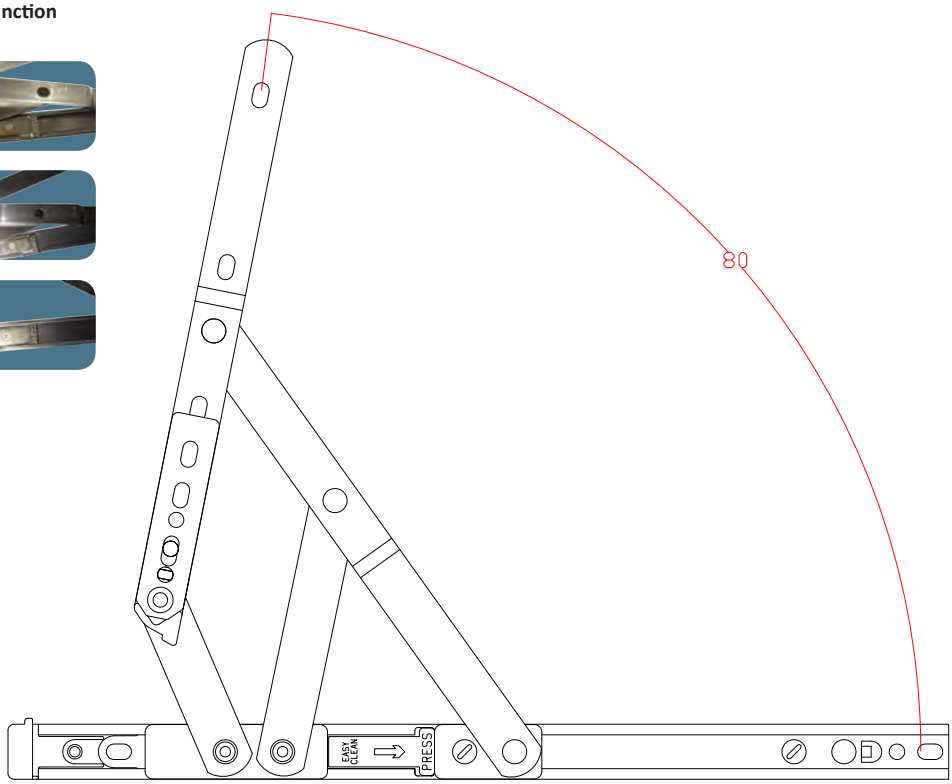

TYPE	SIZE	MAX VENT			OPENING	STACK HEIGHT			BOX QTY.
		WEIGHT	WIDTH	HEIGHT	ANGLE	13mm	16mm	17mm	
Side Hung	12 inch	22kg	300mm	600mm	80º	HIN82712	HIN82712G	HIN82712H	25 Pairs
Side Hung	16 inch	24kg	400mm	700mm	90º	HIN82716	HIN82716G	HIN82716H	25 Pairs

Suitable for triple glazing

10 YEARS

Trojan Mega Easy Clean Friction Hinge

TROJAN ...The Strength of Hardware Design

- Good for triple glazed application
- Suitable for all side hung applications
- Maximum weight load 40kg
- Due to its superior integral strength, one hinge covers all frame widths up to 900mm
- 10 year mechanical guarantee

Recommendations:
Immobilizer to be fitted to Easy Clean feature on sash widths above 600mm
80° restrictor to be fitted where sash would otherwise clash with wall on full opening.

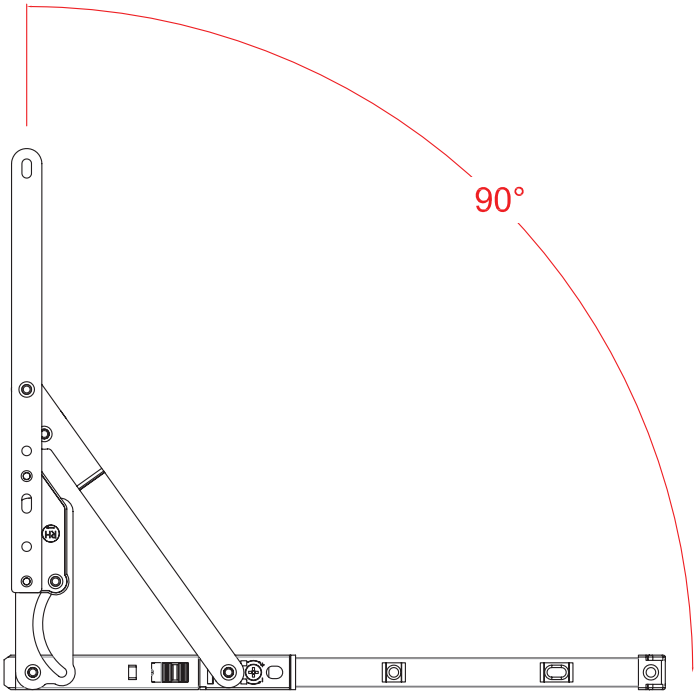

TYPE	SIZE	MAX VENT		OPENING	STACK HEIGHT		BOX QTY.
		WEIGHT	WIDTH	ANGLE	13.5mm	16.5mm	
Side Hung - Egress Only	8 inch	33kg	600mm	90º	HIN01135	HIN01165	25 Pairs
Side Hung - Egress Easy Clean	13 inch	40kg	900mm	90º	HIN00135	HIN00165	25 Pairs
						PART CODE	
Mega Egress Immobilizer						HIN00100	1

Nemesis Twin Cam Espagnolette Bar

PAS 24

SBD Approved

TS008: 2015

BS EN 1670:2007

10 YEAR MECHANICAL GUARANTEE

This multi-point window lock from Kenrick fulfils fabricator demand for a high-quality locking system capable of delivering the superior performance and proven reliability fit for increasingly popular high-end aluminium windows. PAS 24:2016 and SBD accredited, the crime preventing credentials of this security window lock are second to none. It's fitter-friendly too, with a fast-fix design and adjustable mushroom cams to +/- 1mm, ensuring even compression and an optimum seal.

Key Features

- Multi-point locking system with a robust offset gearbox suitable for aluminium profiles
- High-security bi-directional twin cam
- U-Rail faceplate which also works within a eurogroove
- Available with 5 or 7mm cam heights
- Made from durable high-grade 304 austenitic stainless steel

Guarantees & Certificates

- Security tested to PAS 24: 2016 & Secured by Design certified
- Tested to 100,000 cycles with 10-year mechanical guarantee
- Corrosion resistant to BS EN 1670: 2007 Grade 4 240 hours salt spray

See pages 30-31 for further technical drawings

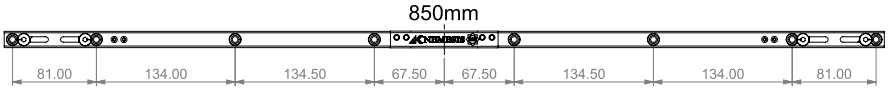

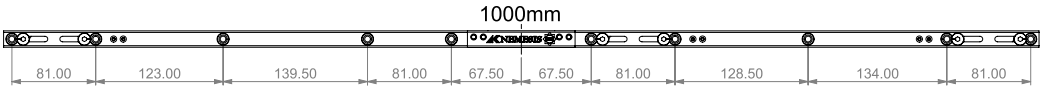

SIZE	HANDING	MUSHROOM HEIGHT		NUMBER OF KEEPS REQUIRED	BOX QTY
		5mm	7mm		
280mm	Left	KNE2050280L	KNE2070280L	2 per lock	20
280mm	Right	KNE2050280R	KNE2070280R	2 per lock	20
400mm	Left	KNE2050400L	KNE2070400L	2 per lock	20
400mm	Right	KNE2050400R	KNE2070400R	2 per lock	20
550mm	Left	KNE2050550L	KNE2070550L	2 per lock	20
550mm	Right	KNE2050550R	KNE2070550R	2 per lock	20
700mm	Left	KNE2050700L	KNE2070700L	2 per lock	20
700mm	Right	KNE2050700R	KNE2070700R	2 per lock	20
850mm	Left	KNE2050850L	KNE2070850L	2 per lock	20
850mm	Right	KNE2050850R	KNE2070850R	2 per lock	20
1000mm	Left	KNE2051000L	KNE2071000L	3 per lock	20
1000mm	Right	KNE2051000R	KNE2071000R	3 per lock	20
1150mm	Left	KNE2051150L	KNE2071150L	3 per lock	20
1150mm	Right	KNE2051150R	KNE2071150R	3 per lock	20
1300mm	Left	KNE2051300L	KNE2071300L	4 per lock	20
1300mm	Right	KNE2051300R	KNE2071300R	4 per lock	20

Please contact our sales department for a keep to suit your profile

BRAND	TYPE					SIZE						HAND-ING			FINISH			RESTRICTION			SUIT-ABLE		BS EN	PART CODES	PAGE
	RELEASABLE	NON-LOCKING	LOCKING	CABLE	FIXED	6 INCH	8 INCH	10 INCH	14 INCH	200MM	UPSTAND (MM)	LEFT	RIGHT	NON	WHITE	BROWN	TAN	ANGLE	DISTANCE (mm)	FORCE (N)	WINDOWS	DOORS			
Cotswold	•		•			•								•							•			CRS21060	302
Cotswold	•		•				•							•							•			CRS21080	302
Cotswold		•			•			•						•				90º			•	•		STY23103	302
Cotswold		•			•				•					•				90º			•	•		STY23143	302
CubeLock	•		•	•						•				•	•				89	1971	•		13126-5	RST90000	303
CubeLock	•		•	•						•				•	•				89	1971	•		13126-5	RST91000	303
CubeLock	•		•	•						•				•	•				89	1971	•		13126-5	RST92000	303
J Banks	•		•									•							100		•		6375	RST50001	304
J Banks	•		•										•						100		•		6375	RST50002	304
Kore	•	•										•									•		6375	RST42011	304
Kore	•	•											•								•		6375	RST42012	304
Kore	•	•									17-21			•	•						•	•		SJA95000	305
Kore	•	•									17-21			•		•					•	•		SJA95009	305
Kore	•	•									17-21			•			•				•	•		SJA95008	305
Kore	•		•								17-21			•	•						•	•		SJA95110	305
Kore	•		•								17-21			•		•					•	•		SJA95119	305
Kore	•		•								17-21			•			•				•	•		SJA95118	305
Yale	•	•									17-21			•	•						•	•		SJA92000	305
Yale	•		•								17-21			•	•						•	•		SJA92100	305
Yale	•		•								17-21			•		•					•	•		SJA92109	305

FIXED

CABLE

RELEASABLE

BLOCKER

Cotswold Architectural Products

Releasable Stay

- Locking friction arm mechanism is released using the key
- This allows the vent to open to its full opening potential, facilitating the cleaning of the exterior glass from inside the property, before being re-engaged to retain the restricted opening
- For use in a 16mm cavity
- Manufactured in austenitic steel
- Non-handed product
- Easy to fit, no routing required
- Can be used on windows without reinforcement

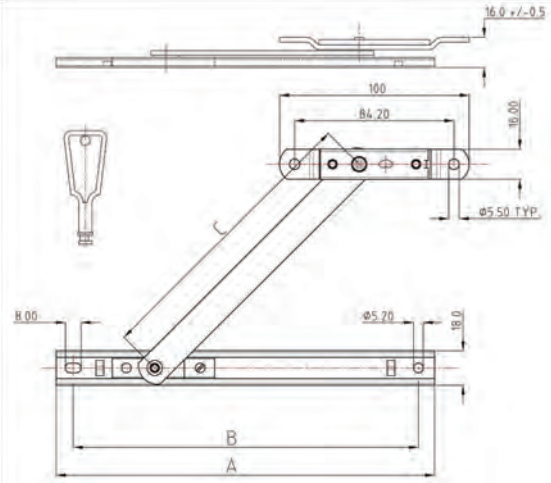

SIZE	DIM A	DIM B	DIM C	PART CODE	BOX QTY.
6 inch	49.5	140.5	101.6	CRS21060	25 Pairs
8 inch	199.5	182.0	152.0	CRS21080	25 Pairs
KEY	-	-	-	CRS21999	250

Cotswold Architectural Products

Restrictor Stay

- 90º door restrictor
- Suitable for use on doors or side hung windows
- Concealed when the door or vent is closed and offers no internal obstruction when opened
- Suitable for PVCu
- Non–handed
- Simple and fast to fit

14 inch version

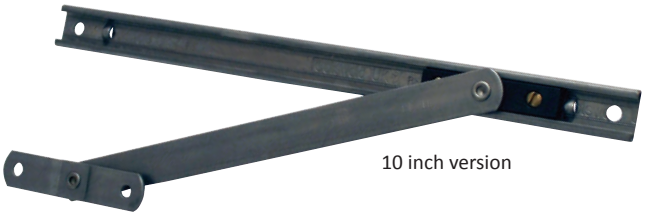

10 inch version

10 inch	14 inch	BOX QTY.
STY23103	STY23143	100

BS EN 13126-5:2011 1971N

Window Restrictors

cubelock
SAFE • SECURE • PEACE OF MIND

- Suitable for use on wood, aluminium, PVCu and steel window frames
- Cable length: 200mm
- Allows maximum 89mm opening to comply with child safety function of BS EN 13126-5:2011
- Independently tested to withstand a breaking force of 1971N
- (RST90000) CLS1 and (RST91000) CLS3 combi restrictors are both secured with a standard key mechanism
- (RST92000) CLB1 restrictor has a captive key disc lock mechanism, so the key won't get lost when open
- The sash fixing point for the CLS3 combi Cubelock fits behind the window handle and the locking mechanism fits directly below on the frame
- Includes tamper-proof screws to reduce the likelihood of abuse

TYPE		LOCK MECHANISM	FINISH	BOX QTY.	PART CODE
	CLS1 Supplied with key, tamper proof screws, and sash & frame parts	Standard Key	White	10	RST90000
	CLS3 Combi Supplied with key, tamper proof screws, and sash & frame parts (handle not included)	Standard Key	White	10	RST91000
	CLB1 Supplied with key, tamper proof screws, and sash & frame parts	Captive Key	White	10	RST92000

Concealed Restrictors

- Spring-loaded releasable arm
- Manufactured from stainless steel
- Complies to BS 6375 : Part 2 : 1987
- Ideal for retrofitting
- Different restrictor stud heights available for different profile stack heights

NB: studs are ordered separately. See below for details

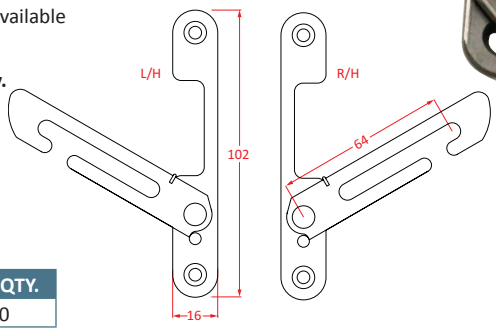

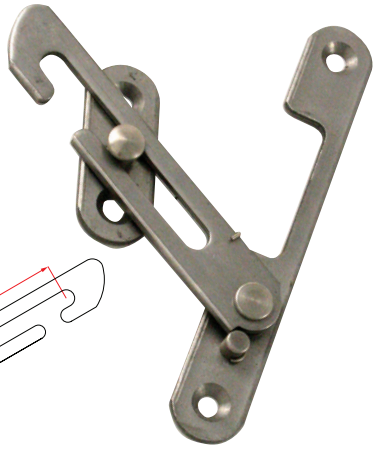

LEFT HAND	RIGHT HAND	BOX QTY.
RST42011	RST42012	50

Concealed Restrictor Studs

- Restrictor stud for use with the Kore by Window Ware concealed restrictors
- Profile stud heights related to friction hinge stack height i.e. 13mm stack = 9.5mm and 17mm stack = 14.5mm stud heights

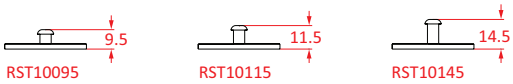

9.5mm	11.5mm	14.5mm	BOX QTY.
RST10095	RST10115	RST10145	50

Res-Lok Concealed Restrictor

- Designed to suit side or top hung applications
- Auto-locking
- Key releasable
- Suitable for PVCu, aluminium & timber
- Eurogroove or surface mounted
- Can be retrofitted
- Restricts sash to 100mm
- Conforms to BS 6375 Part 2:1987
- Constructed from stainless steel & zinc alloy

NB: screws & studs sold separately

LEFT HAND	RIGHT HAND	BOX QTY.
RST50001	RST50002	50

STUDS	BOX QTY.
RST51115	100

Non-locking

Key Locking

Sash Blocker

- Includes 3 sizes of buttons
- Available in white, tan & brown
- Complete with screws & screw covers
- Key locking or non-locking version
- Suitable for upstands of 17–21mm

White

Brown

Tan

TYPE	WHITE	BROWN	TAN	BOX QTY.
Non-locking	SJA95000	SJA95009	SJA95008	10
Locking	SJA95110	SJA95119	SJA95118	10

Non-locking

Key Locking

Sash Blocker

- Suitable for windows and doors
- Offers additional security to both new & existing doors & windows
- Easily retrofitted
- Available in white or brown
- Allen key locking and non–locking versions available
- Suitable for upstands of 17–21mm
- Includes coloured screw cover caps and 3 arm packers, sizes 1.5, 3 & 5mm

White

Brown

TYPE	WHITE	BROWN	BOX QTY.
Non-locking	SJA92000	-	10
Locking	SJA92100	SJA92109	10

Required Measurements

Cockspur Handles

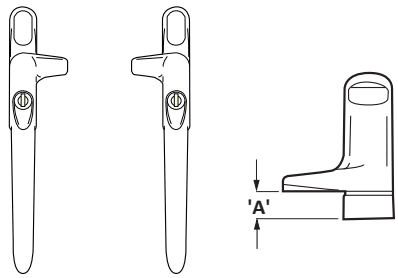

Left Hand | Right Hand | A = Upstand height 9 - 21

Espagnolette (Espag) Handles

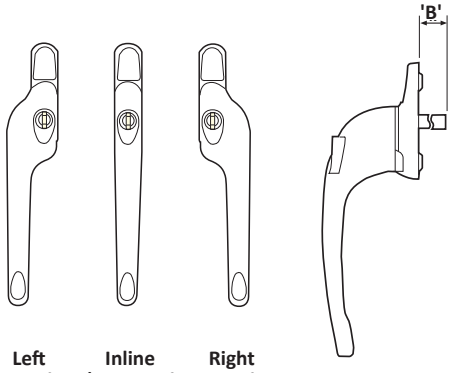

Left Hand | Inline (Universal Handing) | Right Hand | B = Spindle length 9 - 55mm

HANDLE TYPE	HANDING			UPSTAND 'A' (mm)			SPINDLE 'B' (mm)			LOCKING		FINISH							GUARANTEES				BRAND	PAGE
	LEFT	RIGHT	INLINE	9	15.5	21	9	15	35	NON-LOCKING	KEY LOCKING	WHITE	CHROME	SILVER	GOLD	BRASS	BRONZE	BLACK	MECHANICAL	CORROSION BS EN	BBA	SBD		
Cockspur	•	•		•	•	•				•	•	•	•		•			•	10 Years	1670			Trojan	307
	•	•		•		•					•	•		•				•	2 Years	240hrs	•		Securistyle	307
Espagnolette	•	•	•					•			•	•	•	•	•			•	10 Years	1670	•		Trojan	308
	•	•	•				•				•	•	•			•		•	10 Years	240hrs		•	Securistyle	308
	•	•							•		•	•	•	•	•		•	•	10 Years	1670			Regal Hardware	309

Trojan Sparta Locking/Non-locking Cockspur Handles

TROJAN ...The Strength of Hardware Design

- Ergonomically designed, push to release espagnolette handle
- Positive Stop ensures correct closure position
- High quality die-cast barrel

UPSTAND	BUTTON COLOUR	BLACK	BLACK	BLACK	BLACK	BOX QTY.
	HANDING/ COLOUR	WHITE	CHROME	PVD GOLD	BLACK	
9mm	Left Hand	HDL09903	-	-	-	10
9mm	Right Hand	HDL09904	-	-	-	10
15.5mm	Left Hand	HDL15903	HDL15923	-	HDL15953	10
15.5mm	Right Hand	HDL15904	HDL15924	-	HDL15954	10
21mm	Left Hand	HDL21703	HDL21713	HDL21793	-	10
21mm	Right Hand	HDL21704	HDL21714	HDL21794	-	10
ACCESSORIES		WHITE	CHROME	GOLD	BLACK	
Cover Caps		ESP99700	ESP99702	ESP99709	ESP99705	80
Key		-	ESP99799	-	-	1

2 YEAR GUARANTEE

Securistyle Virage Locking Cockspur Handles

securistyle

- Ergonomically designed, push to release espagnolette handle
- Positive Stop ensures correct closure position
- High quality diecast barrel
- 2 year guarantee

UPSTAND	BUTTON COLOUR	WHITE	BLACK	BLACK	BLACK	BOX QTY.
	HANDING/ COLOUR	WHITE	BLACK	SILVER	GOLD	
9mm	Left Hand	HDL10903	HDL10953	HDL10913	HDL10993	25
9mm	Right Hand	HDL10904	HDL10954	HDL10914	HDL10994	25
21mm	Left Hand	HDL21903	-	-	HDl21903	25
21mm	Right Hand	HDL21904	-	-	HDL21904	25

Striker plates for Cockspur Handles

WINDOW WARE We've got it

COLOUR	2mm	3mm	4mm	5mm	6mm	8mm	BOX QTY.
White	STR10012	STR10013	STR10024	STR10035	STR10046	STR10068	100
White	-	STR100013	STR100024	STR100035	STR100046	-	1000
Black	-	STR15013	-	STR15035	-	STR15068	100

TROJAN ...The Strength of Hardware Design

Trojan Sparta 2 Locking/Non-locking Espagnolette Handle

10 YEARS

BBA Approved

- Push to open, key lockable
- Included with every handle is a push fit cover, to make the handle non-locking if required
- 10 year mechanical guarantee
- Corrosion tested to BS EN 1670. Painted finishes Grade 5, plated finishes Grade 4
- BBA approved
- Available in 4 spindle sizes; 15, 20, 30 & 40mm (see page 59 for 20, 30 & 40mm part codes)

SPINDLE LENGTH	BUTTON COLOUR / HANDING/ COLOUR	WHITE / WHITE	BLACK / WHITE	BLACK / SATIN SILVER	BLACK / CHROME	BLACK / BLACK	BLACK / PVD GOLD	BOX QTY.
15mm	Inline	ESP15700WA	ESP15700A	ESP15710A	ESP15720A	ESP15750A	ESP15790A	10
15mm	Left Hand	ESP15703WA	ESP15703A	ESP15713A	ESP15723A	ESP15753A	ESP15793A	10
15mm	Right Hand	ESP15704WA	ESP15704A	ESP15714A	ESP15724A	ESP15754A	ESP15794A	10
ACCESSORIES		WHITE	GREEN	SILVER	CHROME	BLACK	GOLD	
Screw Cover Pad		ESP99700	-	-	ESP99702	ESP99705	ESP99709	100
Button Insert		-	ESP99710G	-	-	ESP99710	-	80
Sparta Key		-	-	ESP99799	-	-	-	1

securistyle

Virage Locking Espagnolette Handle

10 YEAR GUARANTEE

SBD Approved

- Ergonomically designed, push to release espagnolette handle
- Positive stop ensures correct closure position
- High quality diecast barrel
- 10 year mechanical guarantee
- Available in 5 spindle sizes; 9, 15, 20, 30 & 40mm (see page 59 for 15, 20, 30 & 40mm part codes)

SPINDLE LENGTH	BUTTON COLOUR / HANDING/ COLOUR	WHITE / WHITE	BLACK / BLACK	BLACK / SATIN CHROME	BLACK / CHROME	BLACK / BRASS	BOX QTY.
9mm	Inline	ESP09105	ESP09155	ESP09145	ESP09125	ESP09195	25
9mm	Left Hand	ESP09103	ESP09153	ESP09143	ESP09123	ESP09193	25
9mm	Right Hand	ESP09104	ESP09154	ESP09144	ESP09124	ESP09194	25
NON-LOCKING							
9mm	Inline	ESP09100	ESP09150	ESP09140	ESP09120	ESP09190	25
9mm	Left Hand	ESP09101	ESP09151	ESP09141	ESP09121	ESP09191	25
9mm	Right Hand	ESP09102	ESP09152	ESP09142	ESP09122	ESP09192	25

Regal Monkey Tail Locking Espagnolette Handle

- Traditional monkey tail window handle
- Key-lockable design conveniently secures window
- Extensive choice of eye-catching finishes: electro gold, antique bronze, white, chrome, satin, graphite, pewter patina, black and bronze red tint
- Left- or right-handed variants available
- Fits both flush sash and 70mm systems
- Spindles available in 3 sizes; 35, 40 & 55mm (see page 60 for 40mm & 55mm part codes) and come ready-marked at 5mm intervals to make cutting to size simpler
- Can be purchased with extra keys if preferred
- Spare keys available separately
- Screw to screw dimensions 42mm

SPINDLE LENGTH	HANDING	WHITE	BLACK	POLISHED CHROME	SATIN CHROME	ELECTRO GOLD	ANTIQUE BRONZE	BRONZE RED TINT	PEWTER PATINA	GRAPHITE	BOX QTY.
35mm	Left Hand	ESP35203	ESP35253	ESP35223	ESP35213	ESP35283	ESP35263	ESP35273	ESP35243	ESP35233	5
35mm	Right Hand	ESP35204	ESP35254	ESP35224	ESP35214	ESP35284	ESP35264	ESP35274	ESP35244	ESP35234	5
SPARES											
KEYS				ESP99299							50

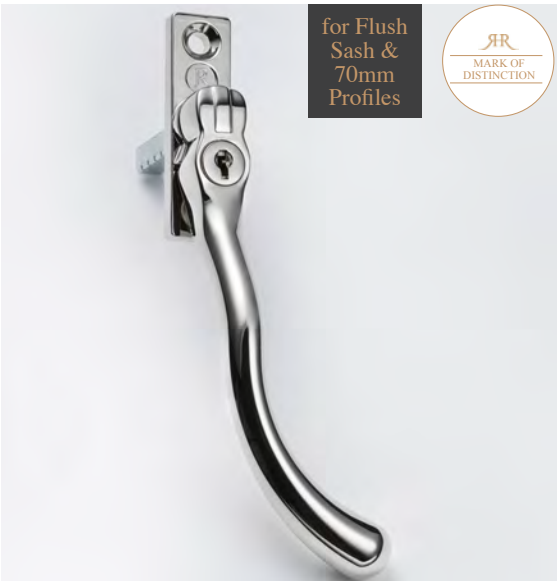

Regal Pear Drop Locking Espagnolette Handle

Key features:

- Traditional pear drop window handle
- Key-lockable design conveniently secures window
- Extensive choice of eye-catching finishes: electro gold, antique bronze, white, chrome, satin, graphite, pewter patina, black and bronze red tint
- Left- or right-handed variants available
- Fits both flush sash and 70mm systems
- Spindles available in 3 sizes; 35, 40 & 55mm (see page 61 for 40 & 55mm part codes) and come ready-marked at 5mm intervals to make cutting to size simpler
- Can be purchased with extra keys if preferred
- Spare keys available separately
- Screw to screw dimensions 42mm

SPINDLE LENGTH	HANDING	WHITE	BLACK	POLISHED CHROME	SATIN CHROME	ELECTRO GOLD	ANTIQUE BRONZE	BRONZE RED TINT	PEWTER PATINA	GRAPHITE	BOX QTY.
35mm	Left Hand	ESP35203A	ESP35253A	ESP35223A	ESP35213A	ESP35283A	ESP35263A	ESP35273A	ESP35243A	ESP35233A	5
35mm	Right Hand	ESP35204A	ESP35254A	ESP35224A	ESP35214A	ESP35284A	ESP35264A	ESP35274A	ESP35244A	ESP35234A	5
SPARES											
KEYS				ESP99299							50

CALDWELL Folding Openers

5 YEAR GUARANTEE

Caldwell folding openers provide a safe, hard-wearing, simple-to-use and cost-effective way to achieve restricted opening on casement windows in public or commercial buildings like schools, hotels, hospitals and offices. They are gravity dependant and therefore best suited to top hung windows, although they may also be fitted to bottom hung, fully reversible and pivot windows. The wide range of fixing brackets available on folding openers mean they are suitable for use on aluminium, PVCu, timber, steel and composite windows.

When it comes to building a best-fit folding opener system, product selection depends, in the first instance, upon the position of the window i.e. is pole operation required? This dictates the type of folding opener used. The next key consideration is the step size and screw centre. These measurements vary according to the casement profile and are critical to achieving a robust, full-functioning system.

Key Features:

- Configurations to suit virtually any profile
- Standard folding openers give a sash movement of 150mm, shorter openers are available on request
- Resilient anodised satin silver finish
- Quality manufactured to **BS EN ISO 9001: 2008**
- Corrosion resistant to **BS 7412: 2007**
- Open/close cycle tested in excess of 100,000 cycles

Hand operated system shown

Pole operated systems

Wherever windows are high up or hard-to-reach due to obstructions, pole-operated folding openers provide a more durable and economical manual way to control windows remotely compared to electronic systems. The recommended high-level configuration usually comprises of 110/111 series or 'pork chop' folding openers, a pre-drilled tandem bar and a 263 tandem eye which can be operated easily and effectively by a boss pole.

110 Type High-level Folding Opener

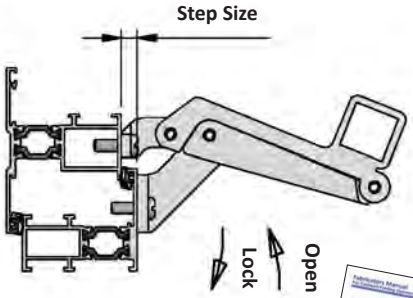

Hand operated systems

On low-level or easily accessible windows that can be safely operated by hand, the type 112 opener is the recommended choice. These openers can be linked by an undrilled tandem bar as there is no need for a tandem eye.

112 Type Low-level Folding Opener

Call sales on **01234 242724** to request your printed copy of our Fabricators Manual or download a PDF now at **windowware.co.uk/caldwell/literature/fabricators-manual-for-caldwell-folding-openers.pdf**

Folding Openers

Low-level Folding Openers

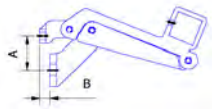

112, 113, 117, 130 & 190

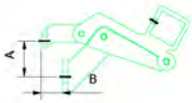

183 & 187

FO TYPE	DIMENSION A (VERTICAL SCREW FIXINGS)	PLATE HEIGHT		DIMENSION B (Step)				
		FRAME FIX	SASH FIX	FLUSH	5mm	7mm	11mm	16mm
112	25mm	25mm	10mm	-	CFO11205	CFO11207	CFO11207 + 2 x 2mm Packers CFO90002	CFO11216
113	15mm	17mm	9mm	-	-	CFO11307	CFO11307 + 2 x 2mm Packers CFO90002	-
117	32mm	-	-	CFO11700	-	-	-	-
117	32mm	25mm	10mm	-	CFO11700 + 5mm Packer CFO90005	-	-	CFO11716
183	32mm	25mm	10mm	-	CFO18305	CFO18305 + 2mm Packer CFO90002	CFO18305 + 5mm Packer CFO90005 & 1mm Packer CFO90001	-
187	48mm	25mm	10mm	-	-	-	CFO18716 + 5mm Frame Packer CFO91005	CFO18716
190	48mm	25mm	10mm	-	CFO19005	CFO19005 + 2mm Packer CFO90002	CFO19016 + 5mm Frame packer CFO91005 or CFO19005 + 5mm Packer CFO90005 & 1mm Packer CFO90001	CFO19016

High-level Folding Openers

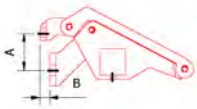

110, 111, 131, & 191

FO TYPE	DIMENSION A (VERTICAL SCREW FIXINGS)	PLATE HEIGHT		DIMENSION B (Step)				
		FRAME FIX	SASH FIX	FLUSH	5mm	7mm	11mm	16mm
110	25mm	25mm	13mm	CFO11000	-	-	-	-
111	25mm	25mm	10mm	-	CFO11100 + 5mm Packer CFO90006	CFO11107	CFO11107 + 2 x 2mm Packers CFO90002	CFO11116
131	38mm	25mm	10mm	-	CFO13105	CFO11105 + 2mm Packer CFO90002	CFO13116 + 5mm Frame Packer CFO91005 or CFO13105 + 5mm Packer CFO90005 & 1mm Packer CFO90001	CFO13116
191	48mm	25mm	10mm	-	-	-	CFO19116 + 5mm Frame Packer CFO91005	CFO19116

A

B - High-level

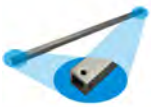

B - Low-level

C - End Cap

C - Screw

D - 263

E - 262

F

Folding opener accessories

These accessories enable you to refine your folding opener system to achieve a perfect fit and a professional finish every time. Our selection of different width packers let you accommodate intermediate step sizes, while tandem bar ends caps ensure a neat finish and a solid build.

KEY	DESCRIPTION	SIZE	TANDEM EYE TYPE	PART CODE
A	Operating Pole / Boss Pole	1400mm	262/263	CFO14000S
A	Operating Pole / Boss Pole	2000mm	262/263	CFO20000S
B	Tandem Bar - High Level	500mm	-	CFO20005
B	Tandem Bar - High Level	900mm	-	CFO20009
B	Tandem Bar - Low Level	500mm	-	CFO20015
B	Tandem Bar - Low Level	900mm	-	CFO20019
B	Universal Cut to Size	3050mm	-	CFO23000
C	Tandem Bar End Cap	-	-	CFO25064
C	Tandem Bar End Cap Screws	-	-	CFO99999
D	Tandem Bar Eyes	Large	262	CFO26200
E	Tandem Bar Eyes	Small	263	CFO26300
F	Folding Opener Packer	1mm	-	CFO90001
F	Folding Opener Packer	2mm	-	CFO90002
F	Folding Opener Packer	3mm	-	CFO90003
F	Folding Opener Packer - Nylon	5mm	-	CFO90005

Flush & Stepped DuoFlex Folding Openers

Flush DuoFlex folding openers

With flexible, fully-adjustable, packer-free fitting, this Duoflex window opener can ably achieve safe, secure restricted opening on a range of open-out, flush-style window frames made from timber, aluminium or steel. Cycle tested to beyond 100,000 operations and constructed from strong, corrosion-resistant aluminium, these openers promise enduring, trouble-free service and superior pristine aesthetics.

- Fits most timber, aluminium or steel window frames
- Suitable for open-out top hung and centre pivot sashes
- Attractive and stylish design
- Fitter-friendly and easy to adjust to suit 0-10mm sash step sizes
- No need for packers
- Distance between fixing centres: 29mm
- Minimum sash height: 250mm on windows with butt hinges. 400mm where friction hinges are used.
- 150mm throw when opening and closing sash
- Over centre design gives a secure lock when the window is closed
- Cycle tested to over 100,000 operations
- Available in silver grey and white finish. Other RAL colours available on request
- Made in UK
- Materials: Aluminium alloy with plastic washers or bushes fitted to all moving joints

Tip: We advise that you use a single opener on sash width up to 500mm, two openers plus link bar on sash widths 600 to 900mm and three openers plus link bar for sash widths 900mm to 1500mm.

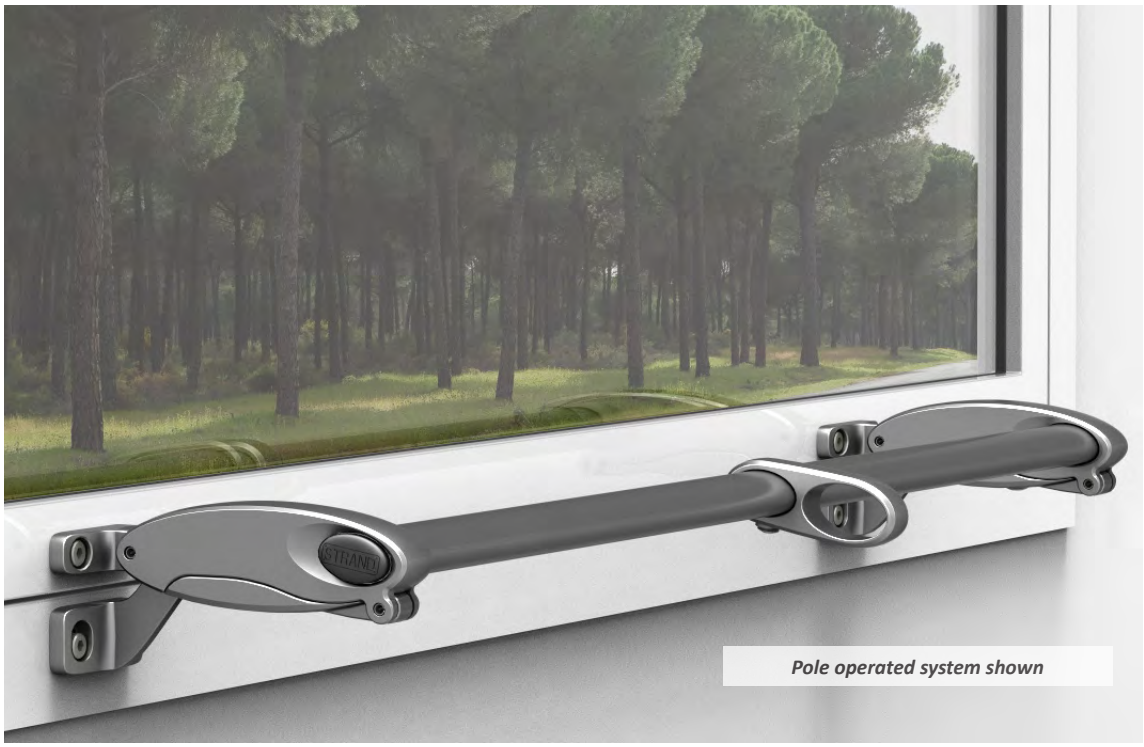

Pole operated system shown

Stepped DuoFlex folding openers

These great-looking, curvy folding openers achieve the perfect balance of form and functionality! Modern aesthetics combine with flexible design features to produce an adaptable folding opener system that gives secure restricted opening and can easily accommodate a range of step sizes from 0-26mm with simple adjustment and no need for packers. That makes DuoFlex stepped openers ideally suited to most types of top-hung or centre-pivot outward opening PVC-u windows.

- Suitable for use on PVCu window frames
- Contemporary, sleek styling
- Easy-fitting and completely adjustable without packers to accommodate 0-26mm step sizes
- Distance between fixing centres: 48mm
- Minimum sash height: 250mm on windows with butt hinges. 400mm where friction hinges are used.
- Gives 150mm throw when opening and closing sash
- Over centre design gives secure locking when the window is closed
- Cycle tested to over 100,000 operations
- Available in silver grey and white finish. Other RAL colours available on request
- Made in UK
- Materials: Aluminium alloy with plastic washers or bushes fitted to all moving joints

Tip: We recommend you use a single opener on sash width up to 500mm, two openers plus link bar on sash widths 600 to 900mm and three openers plus link bar for sash widths 900 to 1500mm.

Flush & Stepped DuoFlex Folding Openers

Flush Folding Openers for Aluminium

DIMENSION A (VERTICAL SCREW FIXINGS)	PLATE HEIGHT				FINISH	
	FRAME FIX	SASH FIX	THROW	STEP	SILVER	WHITE
29mm	19mm	11.5mm	150mm	0-10mm	SDF100220	SDF100225

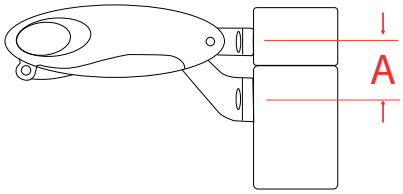

Stepped Folding Openers for PVCu

DIMENSION A (VERTICAL SCREW FIXINGS)	PLATE HEIGHT				FINISH	
	FRAME FIX	SASH FIX	THROW	STEP	SILVER	WHITE
48mm	19mm	11.5mm	150mm	0-26mm	SDF100320	SDF100325

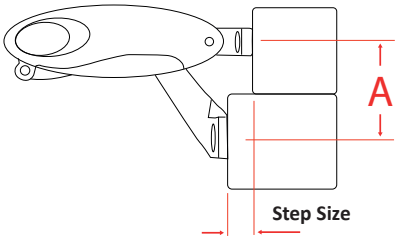

Folding opener accessories

These accessories enable you to refine your folding opener system to achieve a perfect fit and a professional finish every time. Our selection of different width packers let you accommodate intermediate step sizes, while tandem bar ends caps ensure a neat finish and a solid build. If you use a single opener on it's own, but you need a pole, you will also require the pole adaptor listed below.

A - Operating Pole

B - Link Bar | C - End Cap

D - Centre Ring

Accessories

KEY	DESCRIPTION	SIZE	BLACK	SILVER	WHITE
A	Operating Pole	1000mm	-	SDF501000	-
A	Operating Pole	1500mm	-	SDF501500	-
A	Operating Pole	2000mm	-	SDF502000	-
-	Pole Adaptor	-	-	SDF59999	-
B	Link Bar	300mm	-	SDF210300	SDF200300
B	Link Bar	600mm	-	SDF210600	SDF200600
B	Link Bar	900mm	-	SDF210900	SDF200900
B	Link Bar	1000mm	-	SDF211000	SDF201000
C	Link Bar End Caps	-	SDF30005	-	-
D	Centre Ring	-	-	SDF40001	SDF40000

HIGHLINE® WINDOW CONTROLS

Technical Data

Minimum window height for full 250mm travel of T100 - 500mm

Chain openers fitted on windows less than recommended height must have opening restricted to 30% of the vent height using the T700 spring stop or T720 brass stop to shorten the cable run.

For safety reasons we recommend fitting side support stays to all bottom hung, open-in windows. For bottom hung applications you must fit the THL8200/0/1/5 fixing kit (see page 316) (sold separately).

Maximum Control Run

OPERATOR	MAXIMUM CONTROL RUN
T200	30 metres
T250	18 metres
T300	18 metres

Spent Travel Conduit

To allow for the forward/backward movement of the inner cable, a length of "spent travel" conduit must be fitted at either end of the control path i.e. past the last chain/screw jack and below the operator (except the T250 midi operator (see page 317) which has an integral "spent travel" tube).

TYPE OF OPERATOR	SPENT TRAVEL CONDUIT
SJ138600 Screw Jack	2.5m (for full 380mm travel)
T100 Chain Opener	0.3m

Number Of Openers Per Vent

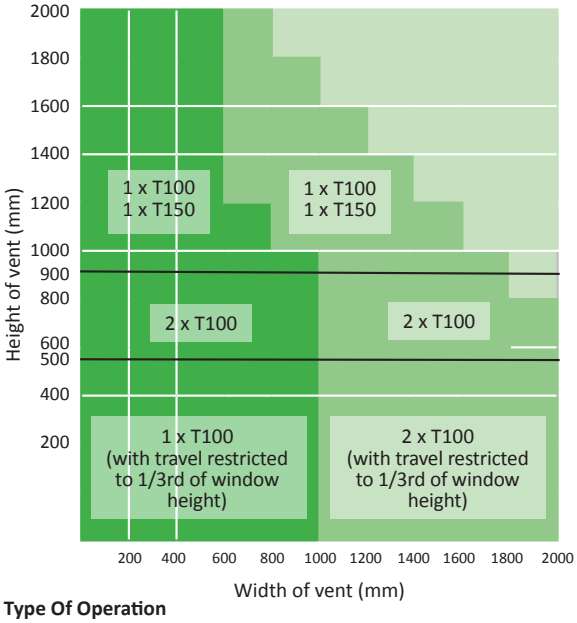

Type Of Operation

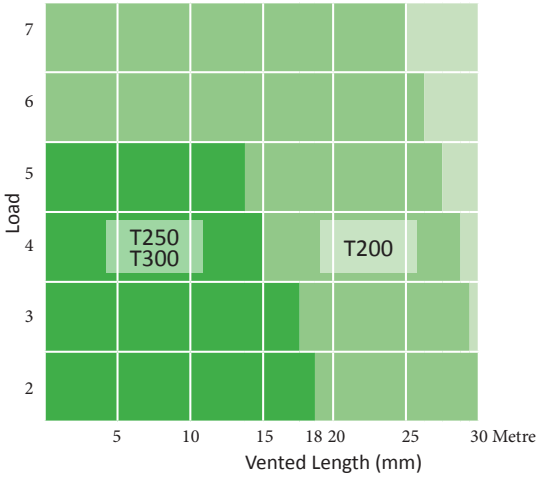

LOAD = No. of chain openers + No. of bends in conduit

The above figures are based on a single bend in the conduit path. For each additional bend deduct 1 metre from the Vented Length total.

The figures used in these charts are based on windows with 4mm double glazed units fitted to butt hinges or free pivots, not friction stays. Please refer to our sales or technical department for advice if friction stays are fitted.

Call sales on **01234 242724** to request your printed copy of our Highline Brochure & Order Form, or download PDF versions now at **windowware.co.uk/highline/literature/highline-window-controls-brochure**

HIGHLINE®
WINDOW CONTROLS

Window Types

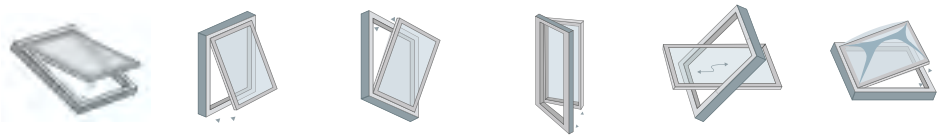

Roof Vent Roof Light | Top Hung Awning | Bottom Hung Hopper | Side Hung Casement | Horizontal Pivot | Dome

Installation Examples

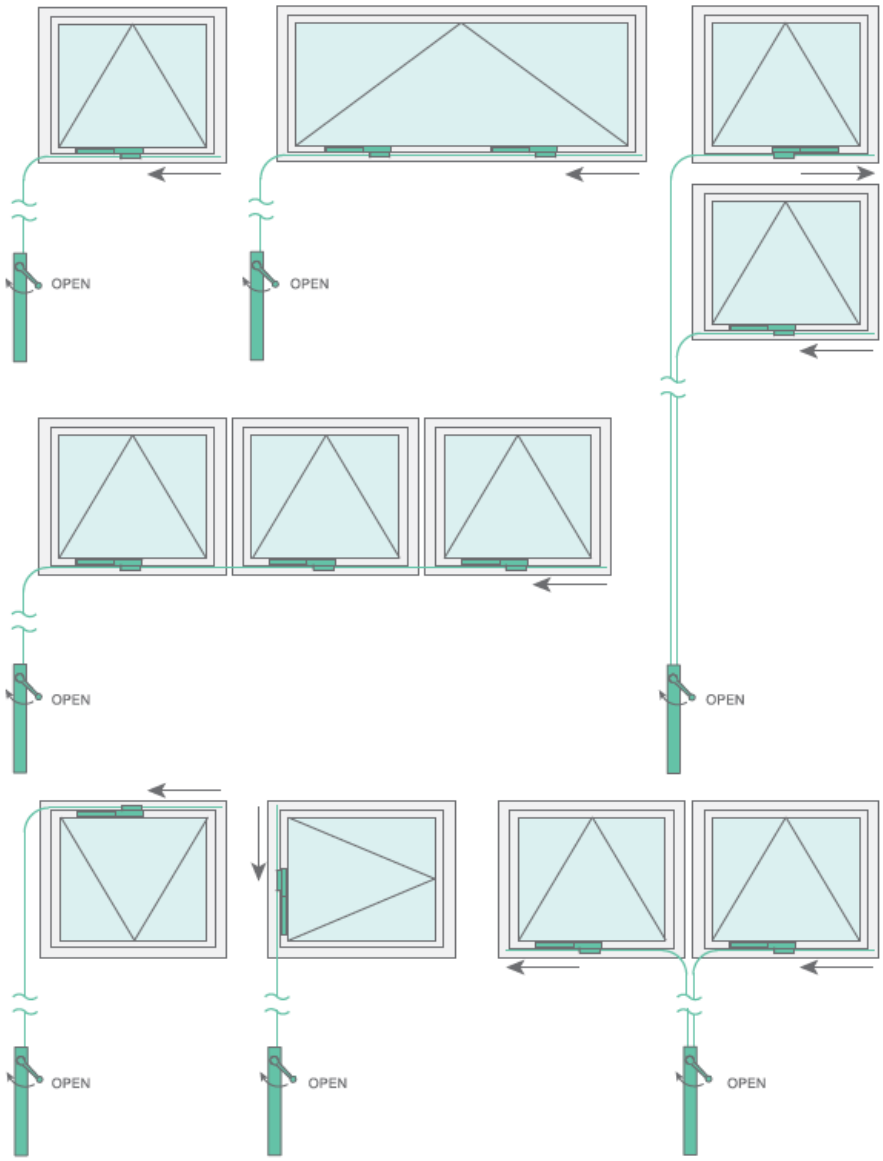

T100 Chain Openers

Top Hung Bottom Hung Side Hung

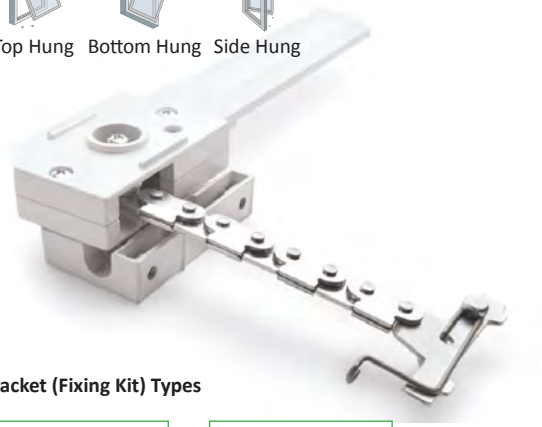

This compact window opener is one of the most popular choices in the range. It's neat, discreet and can be fitted to most top, bottom, and side hung windows to give a generous 250mm opening stroke for excellent natural ventilation.

- 250mm travel length (also available in 380mm)
- Made to last from substantial zinc castings and aluminium extrusion
- Can be fitted on its own or linked with multiple T100 openers and controlled from a single T250, T200 or T300 mini operator
- Fixing plates and bracket fixing kits available to suit most window profiles
- Available in white, grey and black

TIP: As a rule, frames wider than 1200mm should be fitted with a pair of chain openers.

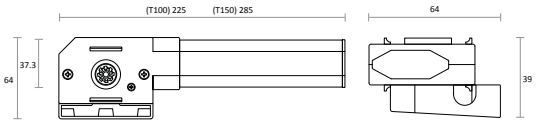

COLOUR	STROKE	PART CODE	BOX QTY
White RAL9010	250mm	THL10000	40
Grey RAL9006	250mm	THL10001	40
Black RAL9005	250mm	THL10005	40

Bracket (Fixing Kit) Types

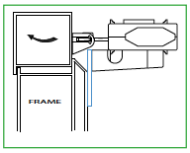

Open-out PVCu
See below for codes

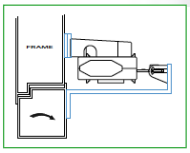

Bottom-hung Open-in
See below for codes

COLOUR	OPEN OUT	OPEN IN	BOX QTY
White	THL81000	THL82000	10
Grey	THL81001	THL82001	10
Black	THL81005	THL82005	10

T175 Locking Manual Openers Bottom Hung Open-In

Bottom Hung

This opener is ideally suited to bottom-hung windows fitted with butt hinges or 'Hopper- style casements that open inwards. It's small enough to fit snugly where space is limited between the reveal and moving frame. Because the moving sash is opened by the strength of the cable alone without the support of any conduit, this opener is better suited to small vents only.

- Works with the helical steel cable (THL41000)
- Used with the T250 or T300 operator on bottom hung windows
- Maximum opening stroke 250mm
- Supplied with mounting brackets
- Available in white, grey and black

TIP: Operate multiple vents by linking locking openers using a rotary junction box.

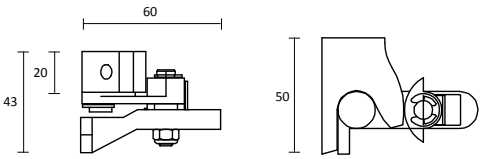

COLOUR	STROKE	PART CODE	BOX QTY
White	250mm	THL17500	10
Grey	250mm	THL17501	10
Black	250mm	THL17505	10

Compatible With

Midi Handle Operator
See Page 317

Maxi Handle Operator
See Page 318

Roof Vent Horizontal Pivot

SJ138600 Screw Jack Opener

This strong and rigid screw jack actuator gives great opening power, perfectly suited to single or multi-operation of banks of medium-sized (>500mm) and heavier casements. It's particularly useful for controlling the opening pitch of roof lights, as well as operating top-hung windows and horizontal pivoting windows. One thing to bear in mind is that, depending on the application, there can be a lot of spent travel to accommodate (see page 314). This will need taking into consideration with the positioning of the system.

- Sill-mounted screw jack used with T200 maxi handle
- High-powered opener strong enough for use on heavy casements
- Maximum opening stroke: 380mm
- Available in white

Compatible With

Maxi Handle Operator
See Page 318

COLOUR	SIZE	PART CODE	BOX QTY
White	380mm	THL13860	25

Top Hung Bottom Hung Side Hung

T250 Manual Midi Operator with Handle

This midi window winder is a popular choice to operate manual window opening systems. Any spent travel (see page 314) is neatly and safely enclosed inside the casing, well away from prying fingers, making it ideal for use in schools and hospitals.

- Can only be used with the T100 and T175 manual openers due to restrictions on the amount of spent travel the casing can accommodate. This allows for a maximum opening of 250mm
- Includes T275 handle, T410 spent travel tube and T720 brass stop
- Remember to allow room for the handle to rotate through 360º (diameter of at least 220mm)
- Use the brass stop included to set the opening size anywhere from 0-250mm
- Available in white, grey and black

Want a window opening wider than 250mm?
See either the Maxi or the Mini on page 318.

Compatible With

Chain Opener
See Page 316

Locking Manual Openers
See Page 316

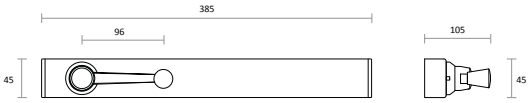

COLOUR	SIZE	MIDI	BOX QTY
White RAL9010	45 x 385mm	THL20000	20
Grey RAL9006	45 x 385mm	THL20001	20
Black RAL9005	45 x 385mm	THL20005	20

T200 Maxi Operators inc. Handles

Roof Vent | Top Hung | Bottom Hung | Side Hung | Horizontal Pivot

If you need to control multiple windows or vents with linked cable runs from a single window winder, or you need to work heavier casements, then this capable, robust manual operator is your best choice thanks to its powerful gearing and heavy-duty construction.

- Capable of operating multiple windows
- Heavy-duty metal case
- Compatible with the T100 chain opener and T175 locking manual opener
- Includes T275 handle and fixings
- Remember to allow room for the handle to rotate through 360º (diameter of at least 220mm)
- Available in white, grey and black

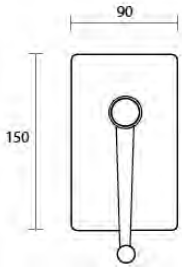

TIP: Operating multiple windows within Schools if the conduit is covered.

Compatible With

Chain Opener See Page 316

Locking Manual Openers See Page 316

Screw Jack Opener See Page 317

COLOUR	SIZE	MAXI	BOX QTY
White RAL9010	90 x 150mm	THL20010	1
Grey RAL9006	90 x 150mm	THL20011	1
Black RAL9005	90 x 150mm	THL20015	1

T300 Mini Operators inc. Handles

Top Hung | Bottom Hung | Side Hung

This compact metal-cased operator is capable of controlling single or several light windows. It's one of our most affordable options, although the spent cable is exposed, and this might be a consideration if the system is going to be installed in a school or public building.

- Compatible with the T100 chain opener and T175 locking manual opener
- Includes T275 handle and fixings
- Remember to allow room for the handle to rotate through 360º (diameter of at least 220mm)
- Available in white, grey and black

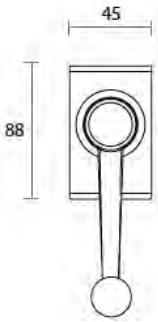

Need to control heavier roof vents?
Check out the powerful Maxi operator above.

Compatible With

Chain Opener See Page 316

Locking Manual Openers See Page 316

Colour	Size	MINI	Box Qty
White RAL9010	45 x 88mm	THL20020	1
Grey RAL9006	45 x 88mm	THL20021	1
Black RAL9005	45 x 88mm	THL20025	1

Rotary Junction Box

Part of the Highline manual window controls range. This junction box connects drivers for satellite openers to the main conduit control system allowing multiple openers to be operated from a single winder. Available white, grey and black.

COLOUR	PART CODE	BOX QTY
White RAL9010	THL51000	1
Grey RAL9006	THL51001	1
Black RAL9005	THL51005	1

Cable Conduit 3 Metre

Works with the Highline manual window controls range. This plastic-covered metal tube protects the control cable that connects a window operator to a chain opener. It features a nylon lining for smooth operation and longer life. Supplied in 3-metre lengths. Available in white, grey and black finish.

COLOUR	SIZE	PART CODE	BOX QTY
White RAL9010	3m	THL40000	20
Grey RAL9006	3m	THL40001	20
Black RAL9005	3m	THL40005	20

Conduit End Cap

Works with the Highline manual window controls range. This moulded plastic conduit plug seals off the end of the conduit run which houses spent travel for a neat, fully enclosed finish. Available in white, grey and black finish.

COLOUR	PART CODE	BOX QTY
White RAL9010	THL83000	100
Grey RAL9006	THL83001	100
Black RAL9005	THL83005	100

Window Control Cable

This dry-lubricated helical cable runs inside the conduit to drive the window opener from the winder operator handle. Available in 1-metre lengths.

Remember to allow enough cable for spent travel

To allow for the forward/backward movement of the inner cable, a length of "spent travel" conduit must be fitted at either end of the control path i.e. past the last chain/screw jack and below the operator (except the T250 midi operator (see page 317) which has an integral "spent travel" tube).

TYPE OF OPERATOR	SPENT TRAVEL CONDUIT
SJ138600 Screw Jack	2.5m (for full 380mm travel)
T100 Chain Opener	0.3m

DESCRIPTION	SIZE	PART CODE	BOX QTY
Inner Cable	1m	THL41000	50m

3-Piece Conduit Saddle Bracket

Part of the Highline manual window controls range. This neat, 3-piece saddle bracket can be fitted to non-masonry surfaces such as window frames to hold the conduit for winding gear firmly in position. This helps to create a professional, tidy finish. Available in white, grey and black.

COLOUR	PART CODE	BOX QTY
White RAL9010	THL80000	100
Grey RAL9006	THL80001	100
Black RAL9005	THL80005	1

Plastic Conduit Saddle Bracket

Part of the Highline manual window controls range. This moulded plastic saddle bracket is quick and easy to fit straight to the window frame to secure the conduit for winding gear in place. Available in white, grey and black.

COLOUR	PART CODE	BOX QTY
White RAL9010	THL80010	10
Grey RAL9006	THL80011	10
Black RAL9005	THL80015	10

Cable Conduit Connector

This three-part metal connector is part of the Highline window controls range and is used to connect two lengths of conduit together to create a longer run of conduit. Each connector consists of a two-part metal sleeve and a plastic collar for a secure fit. Available in white, grey and black.

COLOUR	PART CODE	BOX QTY
White RAL9010	THL50000	10
Grey RAL9006	THL50001	10
Black RAL9005	THL50005	10

Swage Tool

This swage or conduit tool is an essential piece of kit for Highline window control systems. It's used to form the groove in the end of the conduit so it can be securely located into the ridges on the collar of the operator or opener.

DESCRIPTION	PART CODE	BOX QTY
Swage Tool	THL99999	10

Conduit Bend Former

If you're installing Highline manual window controls, you'll need this bend forming tool to create the ideal curve in your conduit with a radius of 90mm for smooth, unhindered cable travel.

DESCRIPTION	PART CODE	BOX QTY
Bend Former	THL99998	10

HIGHLINE® WINDOW CONTROLS

Window Types

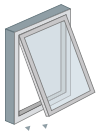

Top Hung
Awning

Bottom Hung
Hopper

Side Hung
Casement

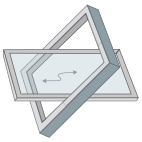

Horizontal
Pivot

Dome

Product Information

The Highline electric window controls range offers reliable, flexible and cost-effective systems to automate the opening of vents and high-level windows for natural ventilation. Natural ventilation improves the air quality of inside spaces by allowing clean, fresh air to enter the building while letting stale air out.

Our range of motorised single chain actuators are controllable from either a simple switch or a digital control panel with temperature, wind or rain activation. The 230V AC actuators featured in this brochure all run off standard mains electricity and are available from stock. 24V models for use in bathrooms and kitchens are also available by special order only.

Highlights of the range include the ever-popular ACK4 chain actuator (sometimes referred to as the MAC) with its 7 opening positions ranging between 100mm to 400mm and fitting brackets for most applications. Then there's the newer Micro EVO Actuator. Versatile enough to adapt to any application, it incorporates a synchronisation feature which lets you easily link several actuators together on the same window – perfect for operating wider casements.

We also have access to lots of other actuators and controls not shown in this brochure, so if you need something you can't see here, why not give our technical team a call on 01234 242724 to discuss your specific requirements.

Call sales on **01234 242724** to request your printed copy of our Highline Brochure & Order Form, or download PDF versions now at **windowware.co.uk/highline/literature/highline-window-controls-brochure**

Top Hung Bottom Hung Side Hung Horizontal Pivot

ACK4 Chain Actuators 300N

HIGHLINE® WINDOW CONTROLS

If you want complete control over how far your vents open, then the ACK4 electric chain actuator gives no less than 7 different stroke positions from 100mm up to 400mm, so you can achieve your desired level of ventilation. With a strong die-cast aluminium casing, a robust double-link stainless steel chain and a maximum thrust force of 300N, the ACK4 actuator is a hard-working, reliable choice for your window control system.

- Suitable for use on most windows and lightweight roof vents and domes
- Adjustable opening stroke with 7 positions from 100-400mm
- Strong die-cast aluminium casing
- Robust double-link stainless steel chain
- High protection class IP 55 rated
- All electrical parts are double insulated
- Audible alarm sounds when installed incorrectly
- Supplied with 1.5m cable
- Brackets and fixings available to most applications (all sold separately
- Available in white

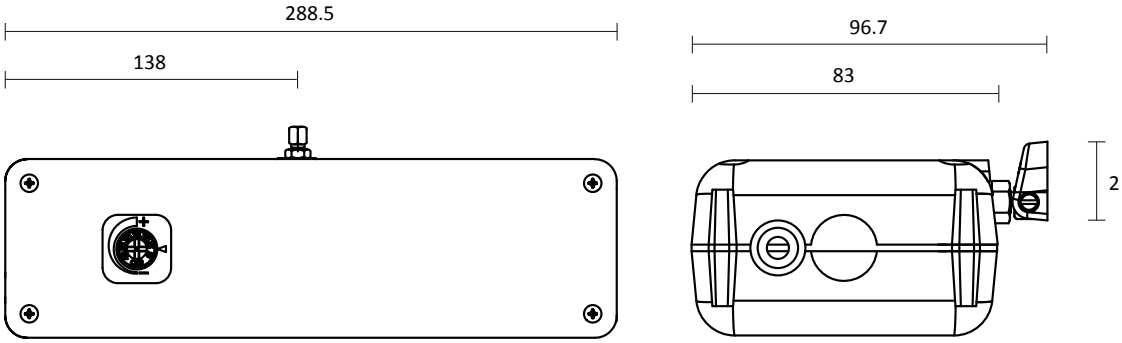

Technical Specifications

VOLTAGE	230VAC
STROKE	100-400mm
THRUST FORCE	300N
ABSORBED CURRENT	0.32A
SPEED	27mm/s
PROTECTION CLASS	IP55
FLEX	1.5m (3 CORE)
LIMIT STOP	Electronic
SAFETY STOP	Electronic
MAX WINDOW WIDTH	<1.5m

Accessories & Bracket Types

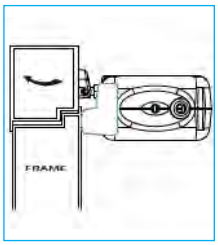

Standard for Ali
ELH30000

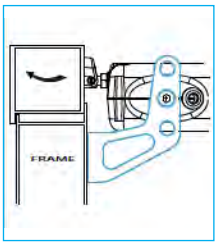

Large for PVCu
ELH30010

1 Gang Switch & Box
EHL20000

EX.PIN SIZE	STEP SIZE	PART CODE	BOX QTY
37mm	10-20mm	EHL40000	1
47mm	20-30mm	EHL40001	1
57mm	30-40mm	EHL40002	1

DESCRIPTION	COLOUR	SIZE	PART CODE	BOX QTY
Actuator	White	288.5 x 83 x 47.8mm	EHL10000	1
Bracket for Ali	White	Standard	ELH30000	1
Bracket for PVCu	White	Large	ELH30010	1

HIGHLINE® WINDOW CONTROLS

C30 Chain Actuators 330N

Top Hung | Bottom Hung | Side Hung | Horizontal Pivot | Dome

This single-chain actuator comes as standard with a selection of different brackets making it suitable for mounting onto top and bottom hung windows. It delivers a maximum push/pull thrust force of 300N which is sufficient to operate most windows, lightweight roof vents and domes. The opening stroke can quickly and easily be adjusted at 200mm or 380mm simply by turning a knob on the outside of the casing.

- Single chain actuator with 2 travel positions (200mm or 380mm)
- Strong composite casing
- All electrical parts are double insulated
- High protection class IP 30 rated
- Features a robust centrally positioned double-link stainless steel chain with a buzzer alarm that sounds in the event of incorrect installation
- Supplied with 1.5m cable
- Comes complete with C30/SB standard bracket and C30/BHB bottom hung bracket
- Available in white

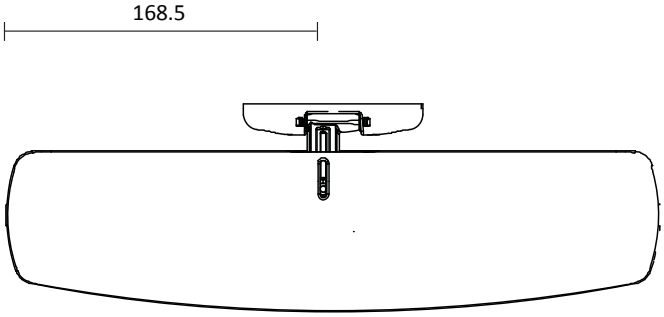

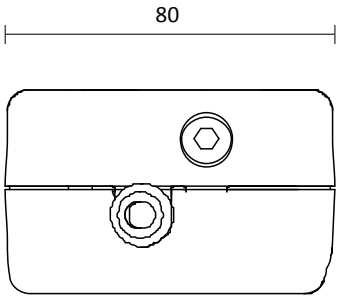

Accessories & Included Bracket Types

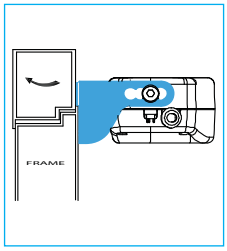

Standard

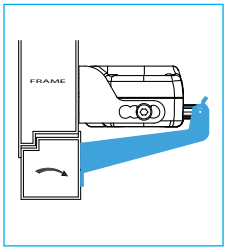

Bottom Hung

1 Gang Switch & Box EHL20000

Technical Specifications

VOLTAGE	230V AC
STROKE	200-380mm
THRUST FORCE	300N
ABSORBED CURRENT	0.26A
SPEED	27mm/s
PROTECTION CLASS	IP30
FLEX	1.5m (3 CORE)
LIMIT STOP	Electronic
SAFETY STOP	Electronic
MAX WINDOW WIDTH	<1.5m

DESCRIPTION	COLOUR	SIZE	PART CODE	BOX QTY
Actuator	White	337 x 80 x 49 mm	EHL10020	1

Top Hung | Bottom Hung | Side Hung | Horizontal Pivot | Dome

Micro EVO Actuator 230v

HIGHLINE WINDOW CONTROLS

If you need high-level electric window controls for a wide casement, then the Micro EVO actuator is just the job. Its integrated synchronisation function means you can easily link up as many as 4 actuators to work together on single window on site and straight out of the box - no need for a separate sync module.

- 4 selectable opening strokes (100-400mm)
- Suitable for most window types and roof vents
- Soft-stop closing for reduced wear on the window frame and actuator
- All electrical parts are double-insulated - Class II AC version – Class III DC version.
- Aluminium casing
- High protection class IP 32 rated
- Double-link chain with anti-corrosion treatment
- Can be easily synced on site to work as a group of up to 4 actuators on wider casements
- Supplied with standard and bottom hung quick-release fixing brackets

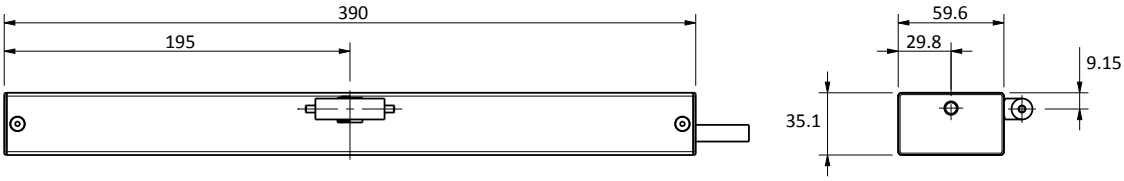

Technical Specifications

VOLTAGE	230V AC
STROKE (SELECTABLE)	100-200-300-400mm
THRUST FORCE	300 N
ABSORBED CURRENT	-
SPEED	12.5mm/s
PROTECTION CLASS	IP 32
FLEX	1.5m (3 CORE)
LIMIT STOP	-
SAFETY STOP	Yes
MAX WINDOW WIDTH	<1.5m

Included Bracket Types

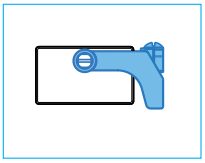

Standard

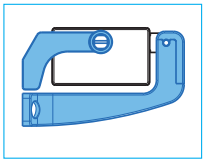

Bottom Hung

Accessories

1 Gang Switch & Box
EHL20000

Large Bracket
EHL31010

DESCRIPTION	COLOUR	SIZE	PART CODE	BOX QTY
EVO Actuator	White RAL9003	390 x 35 x 59mm	EHL10010	1
Additional Bracket	White	Large	EHL31010	1

1 Gang Switch & Box

This S50-1 Rocker switch is part of the Highline electric window controls range and can be used to control the open/close operation of both 230V AC actuators and 24V DC actuators (via 24V DC controllers) which are available by special order.

- 2-way centre off retractive switch
- 10 Amp (max)
- 1-Gang (2-Gang, 3-Gang and 4-Gang versions available upon request)
- Controls the movement of 230V AC window actuators (or 24V DC controllers if required)
- Supplied with surface-mounted box
- Dimensions: 86 x 86 x 28mm

COLOUR	PART CODE	BOX QTY
White	EHL20000	1

Control Unit For Natural Ventilation Window Controls

Rain

Temperature

Manual Override

This compact window control unit is a great way to automatically achieve natural ventilation and ensure a more comfortable environment in stuffy rooms or stifling conservatories. With the digital display, it's quick and easy to program the system to automatically open and close windows or roof vents to achieve a specific room temperature, as well as ensure windows are shut and watertight whenever it rains.

- Control unit for 230V AC Window actuators (max output 8 Amp)
- Automatically opens windows if room gets too hot and closes them according to temperature or when it rains.
- Rain sensor and temperature sensor included
- Digital display for simple programming of the desired room temperature
- High protection class IP 4X rated
- Open and close buttons on front of control panel for direct control

Technical Specifications

VOLTAGE	230V AC
OUTPUT CURRENT	8A
PROTECTION CLASS	IP 4X
DIMENSIONS	146 x 86 x 28mm
INPUTS	Rain Sensor, Temperature Probe

Accessories Included Items

Rain Sensor

Temperature Probe

COLOUR	SIZE	PART CODE	BOX QTY
White	230v	EHL40010	1

HIGHLINE Manual and Electric Controls Enquiry Form

A copy of this form is available to download from
www.windowware.co.uk/highline-window-controls-brochure
Please complete & email to sales@windowware.co.uk

HIGHLINE® WINDOW CONTROLS

Window Ware
Telford way, Cross Park,
Bedford MK42 0PQ
Phone | 01234 242724

Please Tick	Quote		Order
Company Name			
Delivery Address			

Contact	
Email	
Tel. No.	
Fax No.	
Date	
Required Delivery Date	

Please use one form per vent type and size. For examples please see page 315.

How are the vents hinged - Top Hung, Bottom Hung, Side Hung etc?

Please tick in the box below

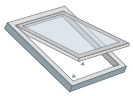

Roof Vent or Roof Light
Not suitable for electric control
☐

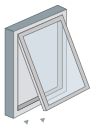

Top Hung Awning
☐

Bottom Hung Hopper
☐

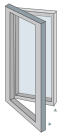

Side Hung Casement
☐

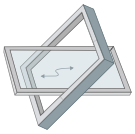

Horizontal Pivot
☐

Dome
☐

Dimensions of the opening vent size:

Height:

Width:

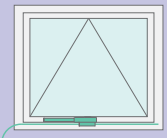

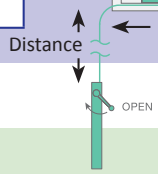

Please complete either Manual or Electric controlled

MANUAL CONTROLLED

Handle Distance from vent: ☐ **No. of vents:** ☐

MATERIAL USED: **PVCu:** ☐ **Aluminium:** ☐ **Timber:** ☐

ELECTRIC CONTROLLED

No. of vents: ☐ **How many actuators:** ☐ *Note: If the vent is wider than 1250mm then 2 or more actuators are required*

Control unit: ☐ **No. of switches:** ☐

TTF Slimline Through-Frame Ventilator

High Air Flow
2500 mm² EQA

- Suitable for PVCu, Aluminium and Timber Windows for **flexible application**
- Delivers 2500 EA to comply with Approved Document F 2006
- Available with easy-to-use manual or cord operation to suit most preferences
- Fully controllable and draught-free to **keep homeowners happy**
- Easy installation to **save fitting time and avoid hassle**
- Ideal for new builds and retro-fitting
- Available in 4 single or dual standard colours – HIPCA white (RAL9910), anthracite grey (RAL7016), anodised silver and black (RAL9005)
- Produced under ISO 9001 Quality Systems for **improved customer satisfaction**
- Ventilation performance tested to BS EN 13141-1:2004
- Acoustic performance tested to BS EN 20140-10:1992, ISO 140-10:1991.
- Water tightness tested to 400pa

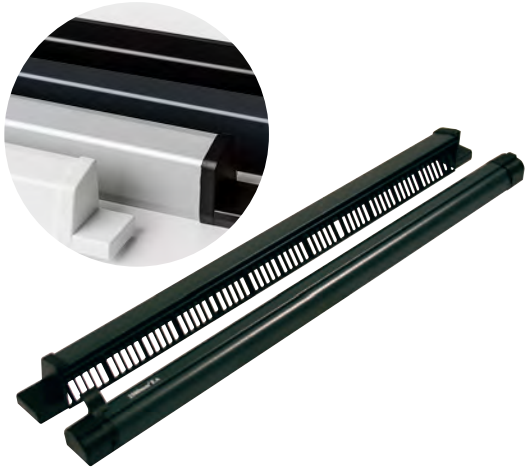

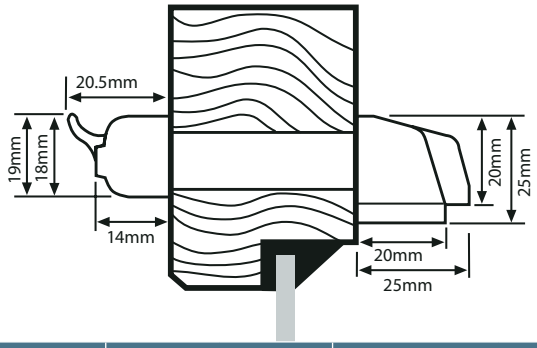

VENT	AIR FLOW (mm²)		SLOT SIZE LENGTH-GAP-LENGTH (mm)	
SIZE (mm)	INTERNAL	EXTERNAL	INTERNAL	EXTERNAL
300	2500	2500	265	265
375	2500	2500	345	345

Internal Finish	HIPCA WHITE RAL9910	HIPCA WHITE RAL9910	HIPCA WHITE RAL9910	HIPCA WHITE RAL9910	ANTHRACITE GREY RAL7016	ANODISED SILVER	BLACK RAL9005
External Finish	ANTHRACITE GREY RAL7016	ANODISED SILVER	BLACK RAL9005	HIPCA WHITE RAL9910	ANTHRACITE GREY RAL7016	ANODISED SILVER	BLACK RAL9005
300	RWS325311	RWS325312	RWS325315	RWS325300	RWS325301	RWS325302	RWS325305
375	RWS325111	RWS325112	RWS325115	RWS325100	RWS325101	RWS325102	RWS325105
Box Qty.	100	100	100	100	100	100	100

Airstrip 19000 'Glazed-in' Ventilator

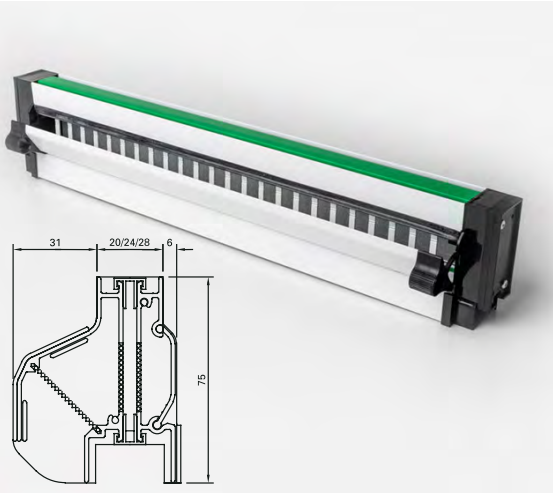

RW Simon Ltd leads the way with this top-performing Airstrip 19000 ventilator, which offers built-in updraught facility and variable operating modes that deliver increased airflow capable of meeting Document F 2010 of building regulations. The Airstrip 19000 is installed between the head of the window profile and held in place by the glazing system. This product is also available as a gas vent, delivering a continuous supply of fresh air in line with Gas Board recommendations. Every ventilator is made to measure to suit your specific application. Please use our custom order form to ensure we have all the relevant information needed to provide you with an accurate quote.

Highlights:
- External hood as standard
- Thermally broken / thermally insulated
- Fitted with storm seal in internal flap. Storm locks available if required
- Flap control offers two opening positions between fully open and fully shut
- Permanent trickle (gas), knob, rod and cord operation available
- Suitable for double glazing thicknesses 20, 24, 28 and 32mm
- Glass height reduction 64mm
- Four standard colour options: Black (RAL9005 matt), White (RAL9910 Hicpa satin), Dark Brown Mahogany (RAL8019 matt) & Grey (RAL7016 matt)
- Special colours and dual colours also available

Performance:
- Tested to BS EN 13141-1:2004 achieves 12,931mm^2 equivalent area
- 5000mm^2 EA achieved on a length of just 386mm
- 2500mm^2 EA achieved on a length of just 193mm
- BS 5440-2:2000 compliant
- Water tightness limit of 600pa
- Acoustically tested to BS EN 20140-10:1992, ISO 140-10:1991

Components:
Two aluminium bodies assembled with thermal break, flap with knob controls at both ends (cord/rod control as optional), pair of end caps, 4 x screws, standard fly screen or gas fly screen, glass and ventilator gasket.

Airstrip 400 'Glazed-in' Ventilator

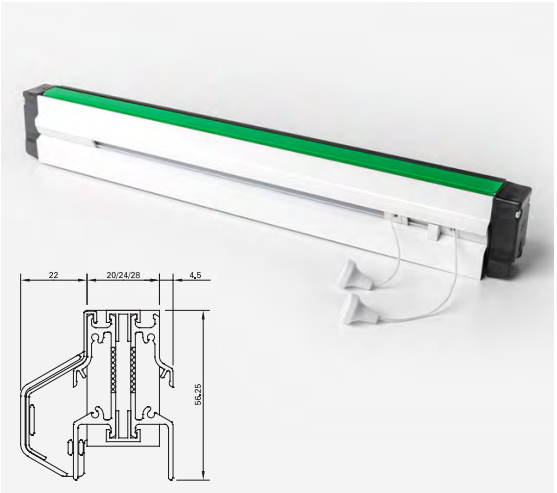

Not only is the Airstrip 400 easy to assemble and simple to install, it's also versatile and achieves superior thermal performance. That's all down to its unique twin shutter system, external hood and thermally broken all-aluminium design, which lets fabricators mix and match the internal/external faces to achieve the exactly the look they're after. The Airstrip 400 is installed between the head of the window profile and held in position by the glazing unit. Every ventilator is custom made to suit your requirements. Please use our special order form to ensure we have all the relevant information needed to provide you with an accurate quote.

Highlights:
- Includes external hood
- Thermally broken / thermally insulated design
- Optional internal updraught deflector
- Twin open and close shutters
- Knob and cord operation available
- Trickle ventilation as standard
- Suitable for double glazing thicknesses 20, 24 and 28mm
- Glass height reduction 45mm
- Four standard colour options: Black (RAL9005 matt), White (RAL9910 Hicpa satin), Dark Brown Mahogany (RAL8019 matt) & Grey (RAL7016 matt)
- Special RAL colours and dual colours also available

Performance:
- Tested to BS EN 13141-1:2004 achieves 4,103mm^2 equivalent area
- 5000mm^2 EA achieved on a length of 1,218mm
- 2500mm^2 EA achieved on a length of 609mm
- BS 5440-2:2000 compliant
- Water tightness limit of 400pa
- Acoustically tested to BS EN 20140-10:1992, ISO 140-10:1991
- Weather performance tested to BS EN 1026:2016 & BS EN 1027:2016

Components:
Supplied assembled. Aluminium body with thermal break and 2 PVCu shutter strips. External hood and fixing screws. Optional internal updraught deflector and fixing screws. Knob or cord control mechanism. Pair of 16, 20 or 24mm end caps. Trickle ventilation baffle plate. 4 x screws. Fly screen and glazing gasket.

To order either the Airstrip 400 or 19000, please contact our sales team on 01234 242724

DUCO Ventilation & Sun Control

Grille Solid F30Z Glazed-in Window Louvre

Q Quality BS EN ISO 9001

10 Year Finish Guarantee

Vandal-proof

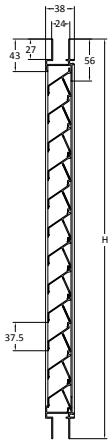

Solid F30/24Z

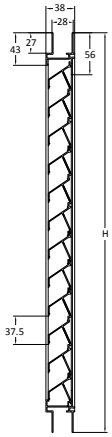

Solid F30/28Z

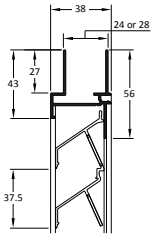

These high-quality aluminium window louvres are custom-made to your exact specifications to fit aluminium, timber & PVCu window frames of any size or finish. DucoGrilles provide intensive ventilation ideally suited to all kinds of industrial and commercial buildings. They let in plenty of fresh air to create a healthy, comfortable environment without compromising security. The unique stackable 'Z' shaped blades in the DucoGrille Solid deliver excellent burglar-resistant, weather-proof strength and durability.

- Available in 24mm or 28mm glazing thickness
- P1 Integrated fly screen as standard. P2 Stainless steel bird mesh or NP non-punched mesh (100% screening louvre) also available
- P2 Bird blade with additional 6mm galvanised mesh meets current gas regulations
- Free area: 34% (with fly screen) or 48% (with bird mesh)
- Blades and frame manufactured from extruded aluminium for strength and precision
- Unique clip-free design ensures blades are held fast by the outer frame and won't rattle in exposed areas or extreme conditions
- Independently tested by the BSRIA for water tightness
- Certified for burglar resistance to European Classification Class2
- Quality manufactured to BS EN ISO 9001
- RAL polyester powder coated 60-80 microns with a 10-year finish guarantee
- Recessed (with or without flange) and surface mounted wall louvres also available

Louvre Type			Grille Size		Mounting
G		Recessed wall louvre with flange	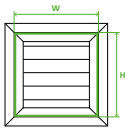	Dimension of louvre without flange (installation dimension) **W**idth - 10mm x **H**eight - 10mm of the wall opening	Fixing dowels included as standard. Allow 5 mm clearance (all round) between opening in wall and frame for fixing.
N		Recessed wall louvre without flange	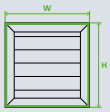	Dimension of louvre (installation dimension) **W**idth - 10mm x **H**eight - 10mm of the wall opening	Fixing dowels included as standard. Allow 5 mm clearance (all round) between opening in wall and frame for fixing.
F		Window louvre	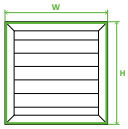	Total **W**idth x total **H**eight of the louvre grille (overall dimension)	Recessed mounting in window section
M		Surface-mounted wall louvre	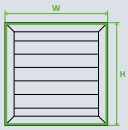	Total **W**idth x total **H**eight of the louvre grille (overall dimension)	Screws and plugs included as standard

		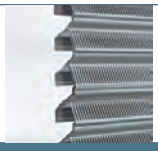		
VENTILATION VALUES		**P1**	**P2**	**NP**
Visual free passage		60%	86%	0
Physical free passage		34%	48%	0
Ce (higher is better)		0.24	0.28	n/a
Cd (higher is better)		0.23	0.28	n/a
K-FACTOR (lower is better)	INLET	17.70	12.85	n/a
	OUTLET	19.13	12.90	n/a
		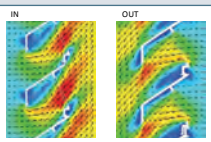	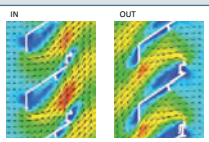	
WATER RESISTANCE				
Air velocity	0 m/s	C (91.1%)	B (96.1%)	n/a
Class A = 100-99%	0.5 m/s	C (83.5%)	B (95.9%)	n/a
Class B = 98.5-95%	1 m/s	D (77.7%)	C (93.5%)	n/a
Class C = 94.9-80%	1.5 m/s	D	C (87.6%)	n/a
Class D = <80%	2 m/s	D	D (67.3%)	n/a
	2.5 m/s	D	D	n/a
SECURITY				
Vandal-proof grille		✓	✓	✓
INSECT SCREEN	**RESISTANCE TO**	**SMALL SLOTS**	**LARGE SLOTS**	**FALSE LOUVRES**
2.3 x 2.3mm		Perforated louvre blades as insect screen	(OPTIONAL) Stainless-steel mesh 2.3 x 2.3 mm	100% Screening Louvre
6 x 6mm			(OPTIONAL) Stainless-steel mesh 6 x 6 mm	n/a
20 x 20mm			(STANDARD) Stainless-steel mesh 20 x 20 mm	n/a
FRAME TYPES AND DIMENSIONS				
Louvre pitch		37.5mm	37.5mm	37.5mm
G — Recessed wall louvre with flange	Recess depth	34.4mm	34.4mm	34.4mm
	Frame rebate	18.2mm	18.2mm	18.2mm
N — Recessed wall louvre without flange	Recess depth	34.4mm	34.4mm	34.4mm
	Frame rebate	18.2mm	18.2mm	18.2mm
F — Window louvre	Frame depth	38mm	38mm	38mm
	Flange width	24 or 28mm	24 or 28mm	24 or 28mm
M — Surface-mounted wall louvre	Recess depth	43mm	43mm	43mm
Minimum dimensions W x H		200 x 200mm	200 x 200mm	200 x 200mm

INDENCO

Adjustable Standard and High Lift Tandem Patio Rollers

94kg MAX PER ROLLER

Need to replace worn out or broken rollers on a sliding door?
These replacement patio rollers / patio wheels are just the job and are suitable for use on most types of aluminium and PVCu patio doors.

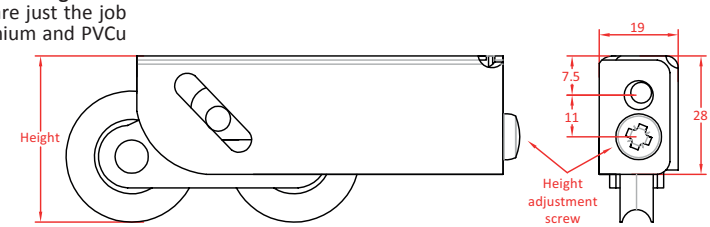

- Maximum load per roller: 94Kg
- Height adjustment: **standard lift** 32-42mm
  high lift 39-50mm
- 1¼ inch bearings
- Body size 88 x 28 x 19mm (LxHxW)
- Corrosion resistant body - available in passivated steel or premium stainless steel
- Quality manufactured according to BS EN ISO 9001: 2015
- Designed and engineered in the UK
- Suitable for aluminium and PVCu patio doors

PART CODE	BODY COMPOSITION	BEARINGS	
STANDARD LIFT TANDEM ROLLERS			
PRL10000	Passivated Steel	Mild Steel	
PRL10000SS	Passivated Steel	Stainless Steel	
PRL10002SS	Stainless Steel	Stainless Steel	
HIGH LIFT TANDEM ROLLERS			
PRL10001	Passivated Steel	Mild Steel	
PRL10001SS	Passivated Steel	Stainless Steel	

10 YEAR GUARANTEE SURFACE & MECHANICAL

BBA Approved

SBD Approved

Lockmaster Bi-fold Short with 24mm U-channel or AluK profile

Yale

Yale's hugely popular multipoint locking system now comes in a slim 28mm backset gearbox specifically designed to secure aluminium bi-fold doors. This 24mm u-channel variant suits the AluK profile to give fabricators and installers a high-security, top-quality, user-friendly bi-fold locking solution that's backed by one of the best-known brands in the business for added confidence and peace of mind.

Key features

- 24mm Yale-branded u-channel variant to suit the AluK profile
- Lockmaster renowned twin hook and anti-lift bolts for enhanced security, strength & usability.
- Deadbolt centre with an easily reversible latch to minimise stock holding
- 28mm backset with PZ92mm centre case
- Slave mechanism for French doors also available
- 2 lock lengths for flexibility to fit a range of door heights
- Quality manufactured in Britain
- Box quantity – 5 locks

Guarantee & certifications:

- Secure - PAS 24: 2016 compliant
- Long service - Tested to 100,000 cycles with a 10-year mechanical guarantee
- Trusted - Yale Lifetime Security Guarantee
- Durable – Anti-corrosion performance tested to BS EN 1670:2007 Grade 4 with a 10-year surface finish guarantee

Material Specifications

- Lock Case: Galvanised Mild Steel
- Faceplate : Mild Steel, BZP and Clear Trivalent
- U-channel: Mild Steel CS4 – ST2473
- Deadbolt and Latchbolt: Zinc Alloy Casting
- Keeps : Mild Steel, BZP and Clear Trivalent

KEEPS TO SUIT
3 Piece Keep Set

Left Hand	**Right Hand**
YBF10003	YBF10004

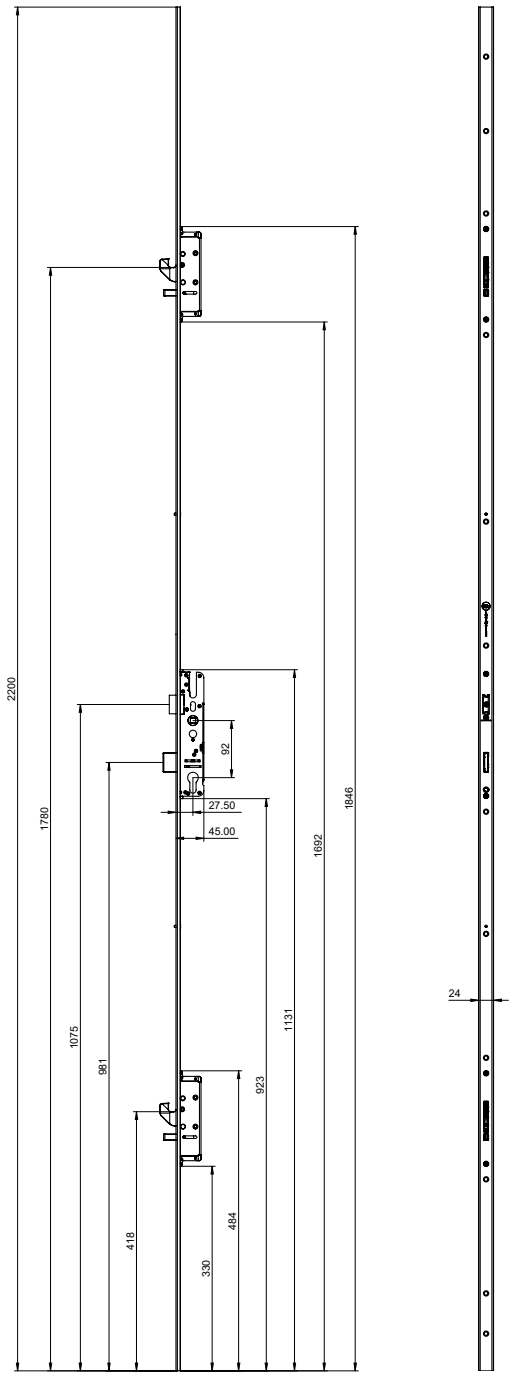

DESCRIPTION	CENTRE CASE	CENTRES	BACKSET	SPINDLE	ROLLER	HOOK & ANTI LIFT PINS	NO. OF KEEPS REQUIRED		PART CODE
							CENTRE	HOOK	
Lockmaster Bi-fold - Short	Latch & Deadbolt	92mm	28mm	Single	2	2	1	2	YBF00428

Lockmaster Bi-fold Long with 24mm U-channel for AluK profile

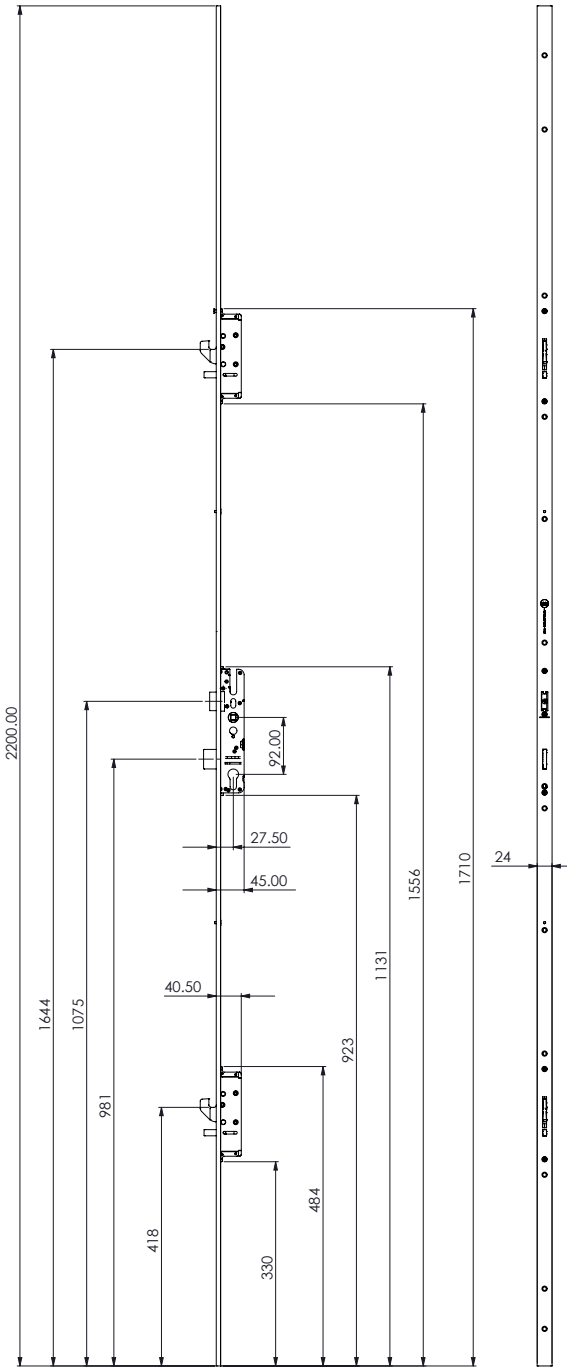

Yale's hugely popular multipoint locking system now comes in a slim 28mm backset gearbox specifically designed to secure aluminium bi-fold doors. This 24mm u-channel variant suits the AluK profile to give fabricators and installers a high-security, top-quality, user-friendly bi-fold locking solution that's backed by one of the best-known brands in the business for added confidence and peace of mind.

Key features

- 24mm Yale-branded u-channel variant to suit the AluK profile
- Lockmaster renowned twin hook and anti-lift bolts for enhanced security, strength & usability.
- Deadbolt centre with an easily reversible latch to minimise stock holding
- 28mm backset with PZ92mm centre case
- Slave mechanism for French doors also available
- 2 lock lengths for flexibility to fit a range of door heights
- Quality manufactured in Britain
- Box quantity – 5 locks

Guarantee & certifications:

- Secure - PAS 24: 2016 compliant
- Long service - Tested to 100,000 cycles with a 10-year mechanical guarantee
- Trusted - Yale Lifetime Security Guarantee
- Durable – Anti-corrosion performance tested to BS EN 1670:2007 Grade 4 with a 10-year surface finish guarantee

Material Specifications

- Lock Case: Galvanised Mild Steel
- Faceplate : Mild Steel, BZP and Clear Trivalent
- U-channel: Mild Steel CS4 – ST2473
- Deadbolt and Latchbolt: Zinc Alloy Casting
- Keeps : Mild Steel, BZP and Clear Trivalent

KEEPS TO SUIT
3 Piece Keep Set

Left Hand	**Right Hand**
YBF10003	YBF10004

DESCRIPTION	CENTRE CASE	CENTRES	BACKSET	SPINDLE	ROLLER	HOOK & ANTI LIFT PINS	NO. OF KEEPS REQUIRED		PART CODE
							CENTRE	HOOK	
Lockmaster Bi-fold - Long	Latch & Deadbolt	92mm	28mm	Twin	2	2	1	2	YBF00528

10 YEAR GUARANTEE SURFACE & MECHANICAL

BBA Approved

SBD Approved

Lockmaster Bi-fold Short with 16mm Faceplate for Smarts & Exlabesa profiles

Yale's top-selling multipoint door lock now comes in a 28mm backset gearbox to fit modern narrow door sets and the slim sightline profiles of today's increasingly popular aluminium bi-fold doors. This 16mm euro groove version works with Smarts and Exlabesa profiles, to deliver industry-leading security, British quality, proven usability and long service life. For fabricators that already know and prefer the Lockmaster brand, this latest offering lets them suite across their entire door range.

Key features
- Standard Yale-branded 16mm faceplate to suit Smarts and Exlabesa profiles
- Lockmaster renowned twin hook and anti-lift bolts for enhanced security, strength & usability.
- Deadbolt centre with an easily reversible latch to minimise stock holding
- Pre-compression roller engagements cams achieve excellent weather-proofing
- 28mm backset with PZ92mm centre case
- Slave mechanism for French doors also available
- Quality manufactured in Britain
- Box quantity – 5 locks

Guarantee & certifications:
- Secure - PAS 24: 2016 compliant
- Long service - Tested to 100,000 cycles with a 10-year mechanical guarantee
- Trusted - Yale Lifetime Security Guarantee
- Durable – Anti-corrosion performance tested to BS EN 1670:2007 Grade 4 with a 10-year surface finish guarantee

Material Specifications
- Lock Case: Galvanised Mild Steel
- Faceplate : Mild Steel, BZP and Clear Trivalent
- U-channel: Mild Steel CS4 –ST2473
- Deadbolt and Latchbolt: Zinc Alloy Casting
- Keeps : Mild Steel, BZP and Clear Trivalent

KEEPS TO SUIT

1 Piece Keep includes packers for Smarts

Left Hand	Right Hand
YBF11241	YBF11242

1 Piece Keep without packera

Left Hand	Right Hand
YBF10001	YBF10002

Seperate packers

Smarts	Exlabesa
PAD80124	PAD80027

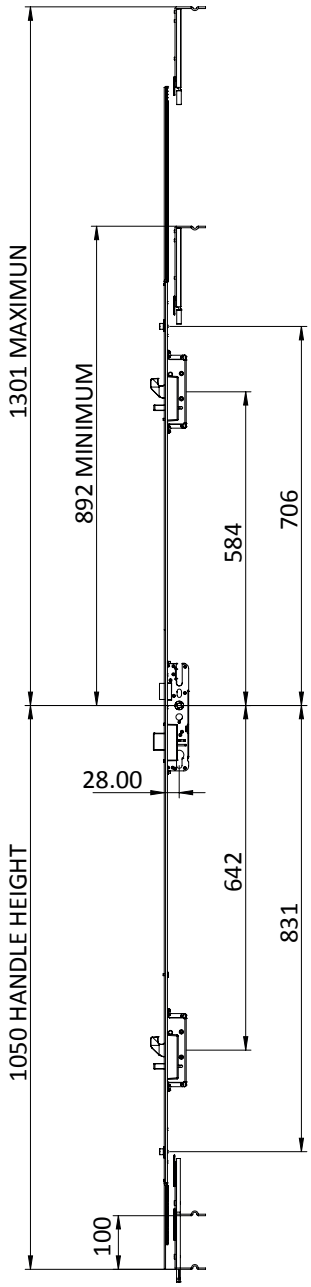

DESCRIPTION	CENTRE CASE	CENTRES	BACKSET	SPINDLE	ROLLER	HOOK & ANTI LIFT PINS	NO. OF KEEPS REQUIRED		PART CODE
							CENTRE	HOOK	
Lockmaster Bi-fold	Latch & Deadbolt	92mm	28mm	Single	2	2	1 x One Piece Handed		YBF00128
Lockmaster Bi-fold - Slave Lock	No Locking Points	92mm	28mm	Single	-	-	-	-	YBF00328

Lockmaster Double Door Bi-fold Lock with 16mm Faceplate for Smarts & Exlabesa profiles

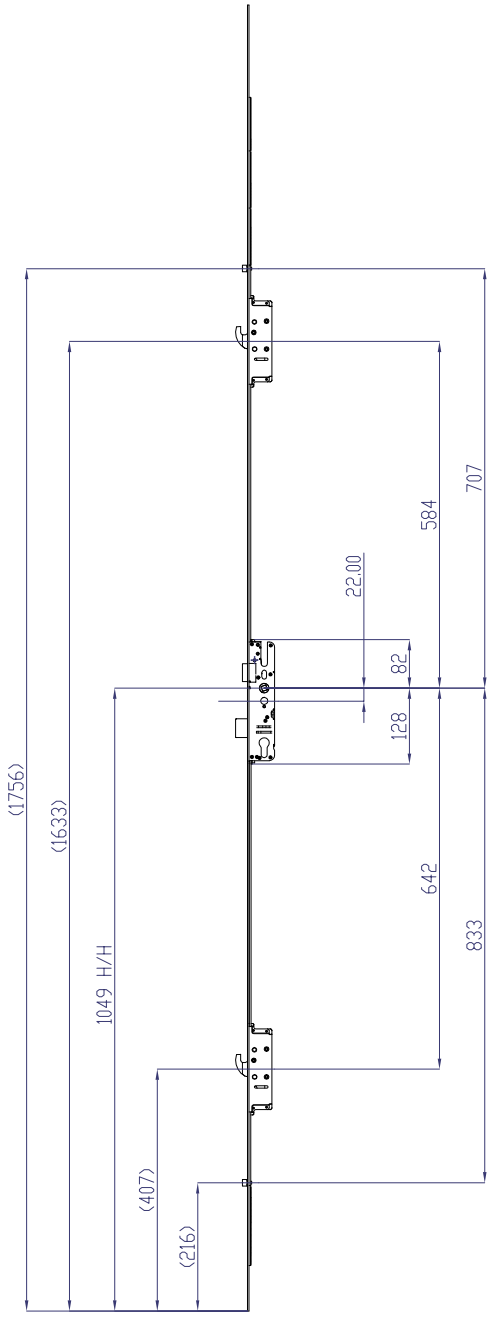

Yale's top-selling multipoint door lock now comes in a 28mm backset gearbox to fit modern narrow door sets and the slim sightline profiles of today's increasingly popular aluminium bi-fold doors. Available in a **16mm eurogroove** version which works with Smarts profile. For fabricators that already know and prefer the Lockmaster brand, this latest offering lets them suite across their entire door range.

Key features

- Standard Yale-branded **16mm eurogroove faceplate** to suit Smarts profile
- Lockmaster renowned twin hook with 20mm projection for enhanced security, strength & usability
- Deadbolt centre with an easily reversible latch to minimise stock holding
- Pre-compression roller engagements cams achieve excellent weather-proofing
- 28mm backset with PZ92mm centre case
- **16mm eurogroove** slave mechanism for French doors also available
- Yale Lockmaster 28mm 1-piece handed keep also available with or without packers
  for standard 16mm eurogroove lock
- Quality manufactured in Britain

Guarantee & certifications:

- Secure - PAS 24: 2016 compliant
- Long service - Tested to 100,000 cycles with a 10-year mechanical guarantee
- Trusted - Yale Lifetime Security Guarantee
- Durable - Anti-corrosion performance tested to BS EN 1670:2007 Grade 4 with a 10-year surface finish guarantee

Material Specifications

- Lock Case: Galvanised Mild Steel
- Faceplate : Mild Steel, BZP and Clear Trivalent
- U-channel: Mild Steel CS4 –ST2473
- Deadbolt and Latchbolt: Zinc Alloy Casting
- Keeps : Mild Steel, BZP and Clear Trivalent

KEEPS TO SUIT

1 Piece Keep includes packers for Smarts

Left Hand	Right Hand
YBF11241	YBF11242

1 Piece Keep without packera

Left Hand	Right Hand
YBF10001	YBF10002

Seperate packers

Smarts	Exlabesa
PAD80124	PAD80027

DESCRIPTION	CENTRE CASE	CENTRES	BACKSET	SPINDLE	ROLLER	HOOK	NO. OF KEEPS REQUIRED		PART CODE
							CENTRE	HOOK	
Lockmaster Double Door Bi-fold Lock, 16 x 2200mm Faceplate	Latch & Deadbolt	92mm	28mm	Single	2	2	1 x One Piece Handed		YBF00628

100kg MAX PER PANEL

10 YEAR WARRANTY

PAS 24 PASSED

Bi-fold Hardware

CALDWELL

KEY	DESCRIPTION	PAGE NO.
A	Top Guide Assembly	338
B	Roller Assembly	338
C	Mullion Top Guide for Slave Door	339
D	Mullion Roller for Slave Door	339
E	Door Hinge	341
F1 & F2	Door Magnets	341
G1	D-handle with Hinge	340
G2	Stack-in D-handle Hinge	340
H1	Flat Door Handle with Escutcheon	343
H2	Flat Door Handle without Escutcheon	343
J	Shootbolt Rods	343
K	Shootbolt Rod Cone	343
L	Shootbolt Rod Guide	343
M	Shootbolt Gearbox	342
N	Shootbolt Gearbox Cover	342

Hardware to suit all folding door configurations and materials

Features:

- Complete range of hinges, handles, rollers and more
- High-quality components
- Strong and durable
- Smooth slide and open mechanism
- Fully tested to PAS 24

Call sales on 01234 242724 to request your copy of our **Fabricators Manual** or download a PDF now at **windowware.co.uk/caldwell-literature**

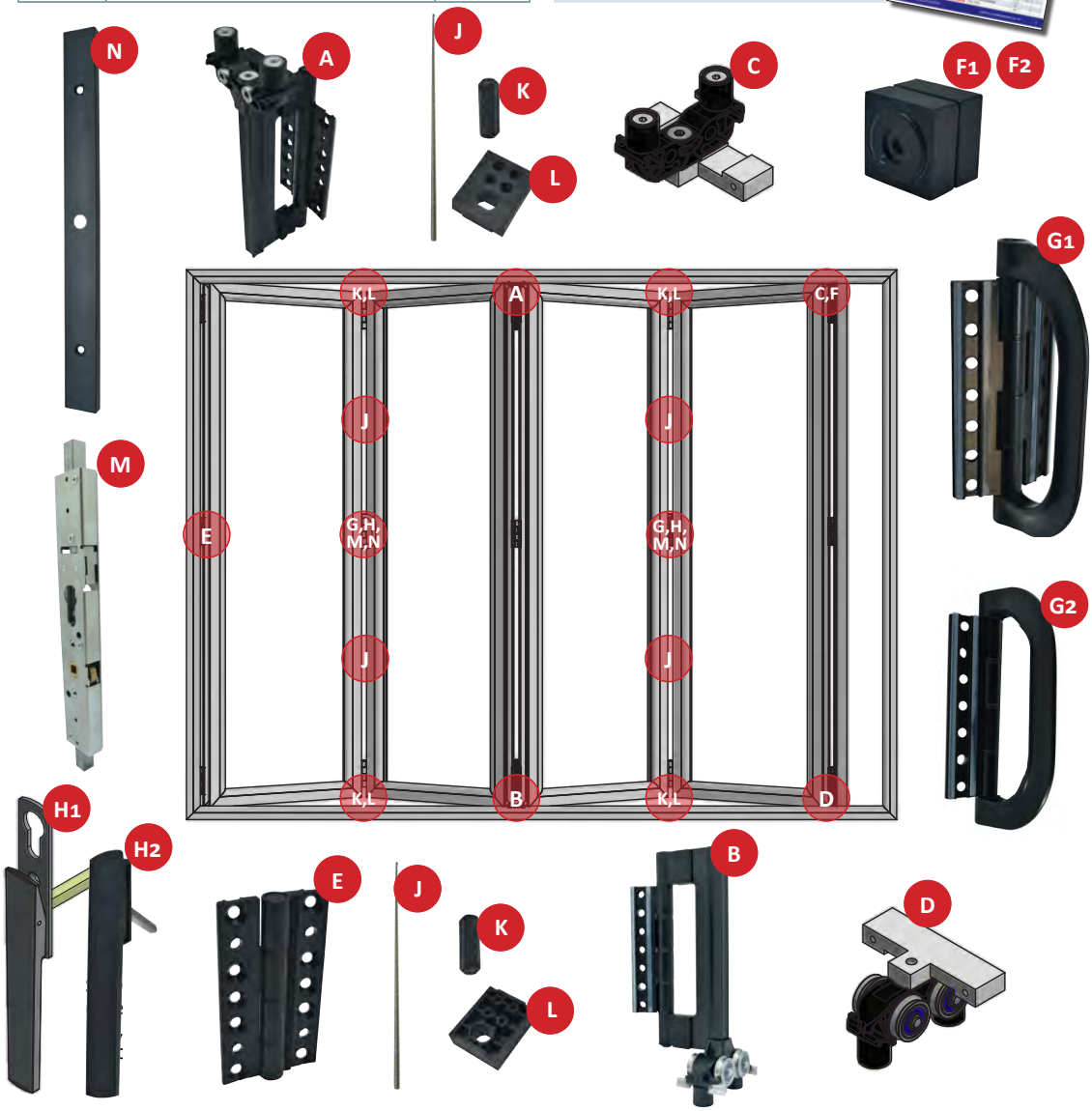

Bi-fold Door Top Guide Assembly

100kg MAX PER PANEL | 10 YEAR WARRANTY | PAS 24 PASSED

This top guide assembly from Caldwell Hardware is used above the roller at the top of bi-fold door installations wherever two hinged door leaves sit in the running track. It works with the bi-fold roller to ably support moving door panels top and bottom and keep the whole system consistently tracking and operating smoothly.

- Security tested to PAS 24
- Quality manufactured to BS EN ISO 9001:2015
- All rollers, clamp plates and fittings supplied
- Suitable for door panels up to 100kg and 1200mm wide*
- Chrome-plated brass wheels & high-quality bearings achieve smooth sliding function
- Main body manufactured from corrosion-resistant die-cast ZP5 Zinc alloy
- Available in black RAL9005, HIPCA white, polished chrome and brushed steel
- 10-year manufacturer's warranty

* Please refer to the fabricators' manual for guidance on maximum panel size and glass thickness.

DOWNLOAD: A PDF of the Fabricators Manual now at windowware.co.uk/caldwell-literature

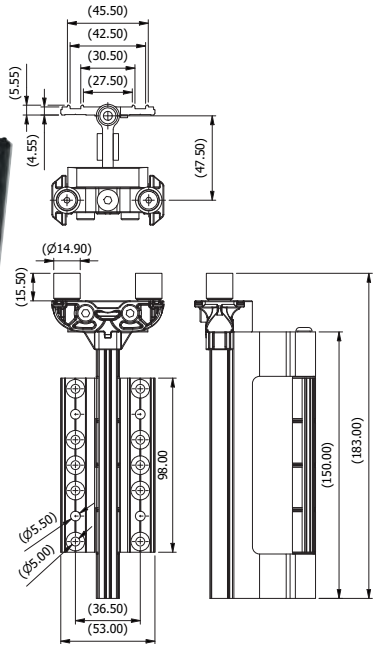

A

HIPCA WHITE	CHROME	BRUSHED STEEL	BLACK RAL9005	BOX QTY.
CBF21000	CBF21002	CBF21003	CBF21005	10

Standard Bi-fold Roller Assembly

100kg MAX PER PANEL | 10 YEAR WARRANTY | PAS 24 PASSED

These robust bi-fold rollers are used at the bottom of folding door installations wherever two hinged panels are sitting directly onto the track. Each roller assembly works with a top guide to support the moving door leaves top and bottom and keep your bi-fold door system consistently tracking smoothly.

- Security tested to PAS 24
- Quality manufactured to BS EN ISO 9001:2015
- All rollers, clamp plates and fittings supplied
- Suitable for door panels up to 100kg and 1200mm wide*
- Chrome-plated brass wheels & high-quality bearings mounted on 303 austenitic stainless-steel axles achieve smooth sliding function
- Main roller body manufactured from die-cast ZP5 Zinc alloy
- Available in black RAL9005, HIPCA white, polished chrome and brushed steel
- 10-year manufacturer's warranty

* Please refer to the fabricators' manual for guidance on maximum panel size and glass thickness.

DOWNLOAD: A PDF of the Fabricators Manual now at windowware.co.uk/caldwell-literature

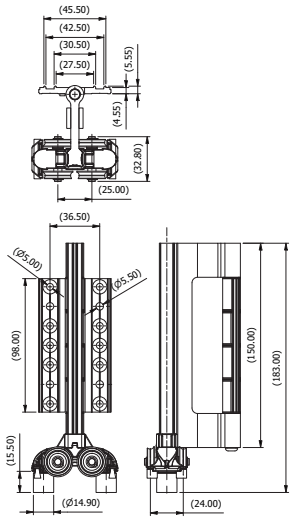

B

HIPCA WHITE	CHROME	BRUSHED STEEL	BLACK RAL9005	BOX QTY.
CBF20000	CBF20002	CBF20003	CBF20005	10

100kg MAX PER PANEL | 10 YEAR WARRANTY | PAS 24 PASSED

Mullion Top Guide for Slave Bi-fold Door

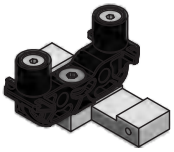

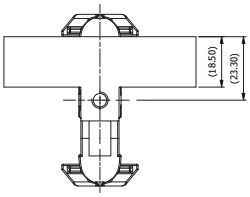

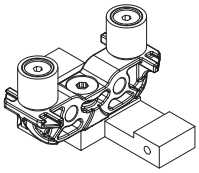

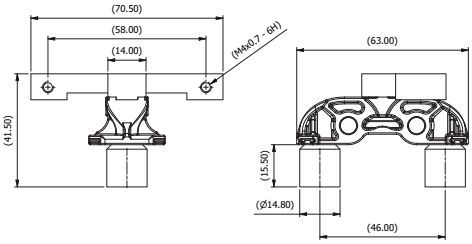

Used when you have an uneven number of bi-fold door panels, the mullion top guide sits in the nylon track at the top corner of a single hinged door panel and works with the mullion roller at the bottom to ensure effortlessly smooth fold and slide operation.

- Security tested to PAS 24
- Quality manufactured to BS EN ISO 9001:2015
- Suitable for door panels up to 100kg and 1200mm wide*
- Chrome-plated brass wheels & high-quality bearings achieve smooth sliding function
- Main body manufactured from corrosion-resistant die-cast ZP5 Zinc alloy
- Mounted on austenitic stainless-steel spindles
- Available in black RAL9005 and HIPCA white
- 10-year manufacturer's warranty

* Please refer to the fabricators' manual for guidance on maximum panel size and glass thickness.

DOWNLOAD: A PDF of the Fabricators Manual now at windowware.co.uk/caldwell-literature

C

HIPCA WHITE	BLACK RAL9005	BOX QTY.
CBF31000	CBF31005	10

100kg MAX PER PANEL | 10 YEAR WARRANTY | PAS 24 PASSED

Mullion Roller for Slave Bi-fold Door

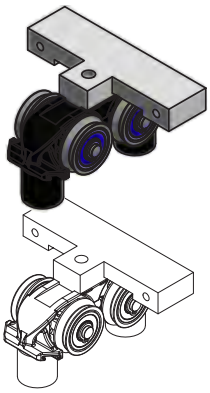

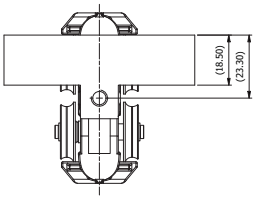

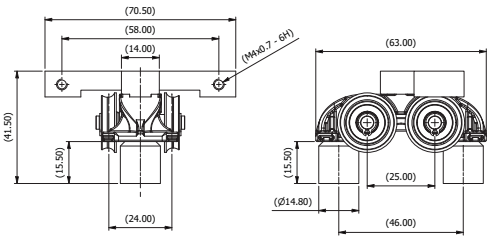

Used when you have an uneven number of bi-fold door panels, this single mullion roller sits in the nylon track at the bottom of a single hinged door panel and works with the mullion top guide to ensure effortlessly smooth fold and slide operation.

- Security tested to PAS 24
- Quality manufactured to BS EN ISO 9001:2015
- Suitable for door panels up to 100kg and 1200mm wide*
- Chrome-plated brass wheels & high-quality bearings achieve smooth sliding function
- Main body manufactured from corrosion-resistant die-cast ZP5 Zinc alloy
- Available in black RAL9005 and HIPCA white
- 10-year manufacturer's warranty

* Please refer to the fabricators' manual for guidance on maximum panel size and glass thickness.

DOWNLOAD: A PDF of the Fabricators Manual now at windowware.co.uk/caldwell-literature

D

HIPCA WHITE	BLACK RAL9005	BOX QTY.
CBF30000	CBF30005	10

Bi-fold Door D-Handle with Hinge

100kg MAX PER PANEL | 10 YEAR WARRANTY | PAS 24 PASSED

This D-handle with hinge is used instead of a centre hinge on stack-out bi-fold door configurations where two hinged panels do not sit on the track, providing extra leverage to pull the panels shut. All Caldwell bi-fold hinges are designed to form a strong, flexible and secure joint between door leaves, as well as give a smooth, superior folding action.

- Security tested to PAS 24
- Quality manufactured to BS EN ISO 9001:2015
- All clamp plates and fittings supplied
- Suitable for door panels up to 100kg and 1200mm wide*
- Ergonomic D-handle made from die cast zinc
- Hinge made from extruded aluminium for greater toughness and accuracy with stainless steel pins for strength and durability
- Available in black RAL9005, HIPCA white, polished chrome and brushed steel
- 10-year manufacturer's warranty

* Please refer to the fabricators' manual for guidance on maximum panel size and glass thickness.

DOWNLOAD: A PDF of the Fabricators Manual now at windowware.co.uk/caldwell-literature

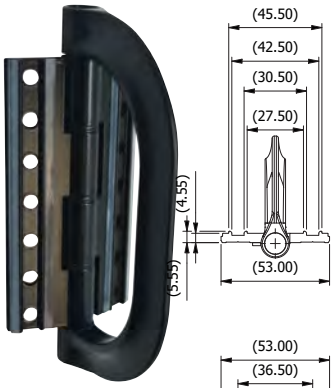

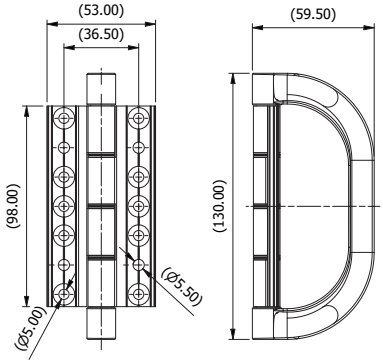

G1

HIPCA WHITE	CHROME	BRUSHED STEEL	BLACK RAL9005	BOX QTY.
CBF50000	CBF50002	CBF50003	CBF50005	10

Bi-fold Door Stack-in D-Handle Hinge

100kg MAX PER PANEL | 10 YEAR WARRANTY | PAS 24 PASSED

This open-in bi-fold door pull D-handle from Caldwell is designed for internal use on bi-fold door systems to deliver a firm, comfortable hold when opening and closing stack-in door sets.

- Security tested to PAS 24
- Quality manufactured to BS EN ISO 9001:2015
- All clamp plates and fittings supplied
- Suitable for door panels up to 100kg and 1200mm wide*
- Comfortable ergonomic D-handle made from die cast zinc
- Available in black RAL9005, HIPCA white, polished chrome and brushed steel
- 10-year manufacturer's warranty

* Please refer to the fabricators' manual for guidance on maximum panel size and glass thickness.

DOWNLOAD: A PDF of the Fabricators Manual now at windowware.co.uk/caldwell-literature

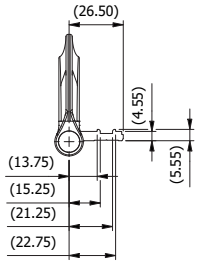

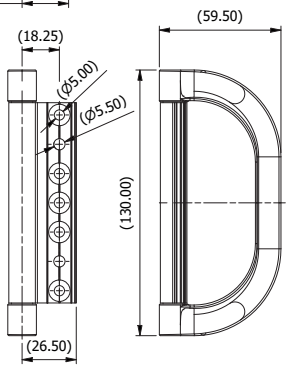

G2

HIPCA WHITE	CHROME	BRUSHED STEEL	BLACK RAL9005	BOX QTY.
CBF51000	CBF51002	CBF51003	CBF51005	10

100kg MAX PER PANEL | 10 YEAR WARRANTY | PAS 24 PASSED

Bi-fold Door Hinge

CALDWELL

These high-quality PAS 24 compliant hinges are part of the Caldwell range of folding door hardware. They're used to form a joint between two door panels or between the hinged door and frame to achieve a smooth, superior folding operation. And once the doors are shut, they'll ensure a flush, firm, secure seal to keep out moisture or drafts and deter burglars.

- Security tested to PAS 24
- Quality manufactured to BS EN ISO 9001:2015
- All clamp plates and fittings supplied
- Suitable for door panels up to 100kg and 1200mm wide*
- Hinge made from extruded aluminium for greater toughness and accuracy
- Hinge pins are stainless steel for strength and durability
- Available in black RAL9005, HIPCA white, polished chrome and brushed steel
- 10-year manufacturer's warranty

* Please refer to the fabricators' manual for guidance on maximum panel size and glass thickness.

DOWNLOAD: A PDF of the Fabricators Manual now at windowware.co.uk/caldwell-literature

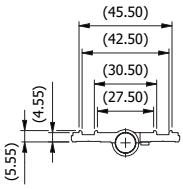

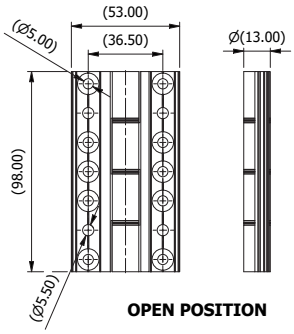

OPEN POSITION

E

HIPCA WHITE	CHROME	BRUSHED STEEL	BLACK RAL9005	BOX QTY.
CBF40000	CBF40002	CBF40003	CBF40005	10

100kg MAX PER PANEL | 10 YEAR WARRANTY | PAS 24 PASSED

Square Bi-fold Door Magnet

CALDWELL

These bi-fold door magnets/bi-fold magnetic door catches from Caldwell hardware are available in two different sizes and are used to firmly and safely hold the door leaves in the folded position.

- Cube sizes: 26mm = 2 x (30 x 30 x 12.8mm)
  60mm = 2 x (30 x 30 x 30.6mm)
- Quality manufactured to BS EN ISO 9001:2015
- Designed to work on door panels up to 100kg and 1200mm wide*
- 10-year manufacturer's warranty
- Available finishes: black RAL9005, HIPCA white, polished chrome, brushed steel

* Please refer to the fabricators' manual for guidance on maximum panel size and glass thickness.

DOWNLOAD: A PDF of the Fabricators Manual now at windowware.co.uk/caldwell-literature

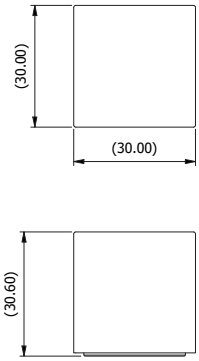

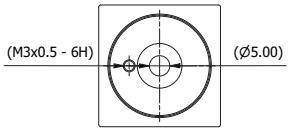

	SIZE	HIPCA WHITE	CHROME	BRUSHED STEEL	BLACK RAL9005	BOX QTY.
F1	26mm	CBF72600	CBF72602	CBF72603	CBF72605	10
F2	60mm	CBF76000	CBF76002	CBF76003	CBF76005	10

Bi-fold Door Locking Shootbolt Gearbox

100kg MAX PER PANEL

10 YEAR WARRANTY

PAS 24 PASSED

Caldwell's rugged locking mechanism for bi-fold doors can be fitted to secure folding door sets in the closed position. The gearbox drives a sturdy 10mm wide shootbolt from the traffic door so it can't be forced open. This delivers PAS 24 certified security performance that meets Document Q requirements for new builds and brings added peace of mind to homeowners.

- Security tested to PAS 24
- Quality manufactured to BS EN ISO 9001:2015
- Suitable for door panels up to 100kg and 1200mm wide*
- 10-year manufacturer's warranty

* Please refer to the fabricators' manual for guidance on maximum panel size and glass thickness.

DOWNLOAD: A PDF of the Fabricators Manual now at windowware.co.uk/caldwell-literature

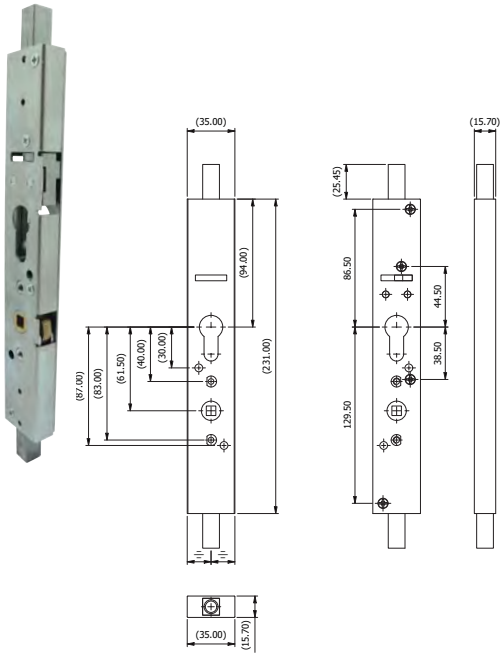

M

PART CODE	BOX QTY.
CBF60000	10

Cover for Caldwell Bi-fold Door Shootbolt Gearbox

100kg MAX PER PANEL

10 YEAR WARRANTY

This black plastic cover is designed to hide the shootbolt lock recess on the traffic door of a fold and slide door installation to give a neat and streamlined finish.

- Made from black nylon
- Quality manufactured to BS EN ISO 9001:2015
- 10-year manufacturer's warranty

DOWNLOAD: A PDF of the Fabricators Manual now at windowware.co.uk/caldwell-literature

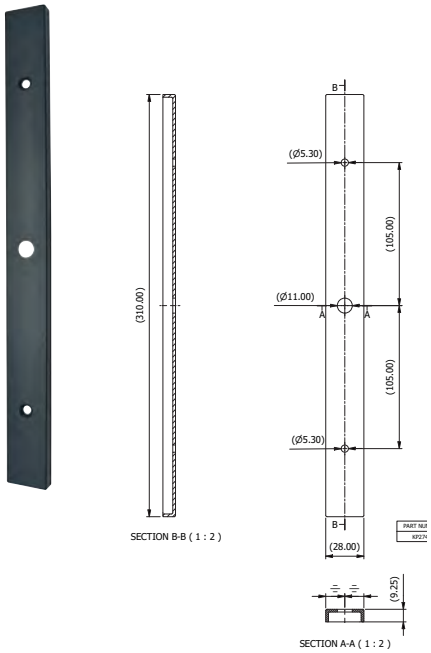

N

BLACK RAL9005	BOX QTY.
CBF61000	10

100kg MAX PER PANEL | 10 YEAR WARRANTY | PAS 24 PASSED

Bi-fold Door Handle with or without Escutcheon

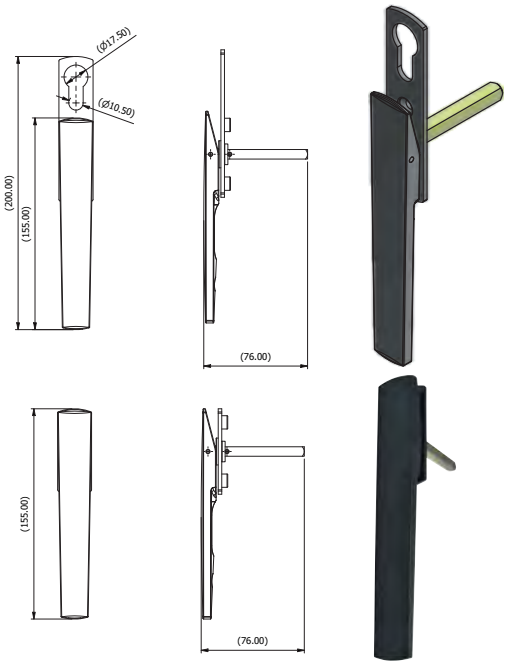

Part of the Caldwell folding door hardware range, this sleek and robust bi-fold shootbolt door handle accommodates a cylinder and works with the locking gearbox to operate the shootbolt system and secure the traffic door. Locking handles like these offer excellent crime-beating protection and increased peace of mind to keep security-conscious homeowners and insurance providers happy.

- Security tested to PAS 24
- Quality manufactured to BS EN ISO 9001:2015
- Suitable for door panels up to 100kg and 1200mm wide*
- Available in black RAL9005, HIPCA white, polished chrome, brushed steel and gold
- 10-year manufacturer's warranty

* Please refer to the fabricators' manual for guidance on maximum panel size and glass thickness.

DOWNLOAD: A PDF of the Fabricators Manual now at windowware.co.uk/caldwell-literature

FINISH	H1 WITH ESCUTCHEON	H2 WITHOUT ESCUTCHEON	BOX QTY.
HIPCA WHITE	CBF10000	CBF11000	10
CHROME	CBF10002	CBF11002	10
BRUSHED STEEL	CBF10003	CBF11003	10
GOLD	CBF10009	CBF11009	10
BLACK RAL9005	CBF10005	CBF11005	10

100kg MAX PER PANEL | 10 YEAR WARRANTY | PAS 24 PASSED

Shootbolt Rods, Cones & Guides

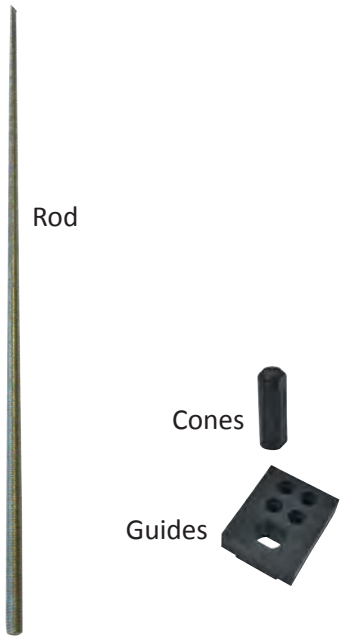

Caldwell bi-fold door M10 threaded rod - This shootbolt rod works with the Caldwell bi-fold locking gearbox to secure the traffic door on folding door installations against forced entry.

- M10 x 1500mm long rods
- Security tested to PAS 24
- Designed to work on door panels up to 100kg and 1200mm wide*

Caldwell bi-fold door shootbolt rod end guide - Secured and mounted to the face of the sash, this end guide works with the rod end cone on a shootbolt rod to guide the locking mechanism into location and aid compression.

Caldwell bi-fold door shootbolt rod end cone - Screwed to the end of the M10 threaded shootbolt rod, this end cone works with the rod end guide to direct the locking mechanism into location and aid compression.

- Quality manufactured to BS EN ISO 9001:2015
- Suitable for door panels up to 100kg and 1200mm wide*
- 10-year manufacturer's warranty

* Please refer to the fabricators' manual for guidance on maximum panel size and glass thickness.

DOWNLOAD: A PDF of the Fabricators Manual now at windowware.co.uk/caldwell-literature

	TYPE	M10 x 1500mm	BLACK RAL9005	BOX QTY.
J	ROD	CBF61500	-	5
K	CONE	-	CBF62000	50
L	GUIDE	-	CBF62100	50

STRAND HARDWARE LIMITED
THE BEST WAY OUT...

Anti-panic Modular Hardware

ANTIPANIC PH355/7 BS EN1125 CERTIFIED TO 3 7 6 1 1 4 2 2 A

ANTIPANIC PH356 BS EN179 CERTIFIED TO 3 7 6 1 1 4 2 2 B

- CE approved panic hardware system conforming to EN 1125
- Precision engineered to open with minimum pressure
- Entirely surface mounted to maintain the integrity of door and frame
- Suits doors up to 2700mm high and 1100mm wide
- Available from stock in white or silver
- Full mounting instructions come with every kit
- Outside access available. Note this non key-retaining access handle allows removal of the key once unlocked. Access remains unlocked until the key is used to re-lock the outside access handle.

NB. To ensure compliance with current fire and building regulations we recommend consultation with local fire officers and building control inspectors prior to finalising specifications. All panic bars now sold in Europe must conform to the latest CE Regulations. Each panic bar kit comes complete with certificate of approval.

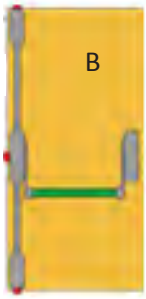

	DESCRIPTION	WHITE	SILVER	BLACK	BOX QTY.
A	3 Point Panic Latch Set (Master) Includes: push bar, 2 x pullman rod covers, 2 x rods, 2 x side or vertical pullman, 2 x pullman covers, accessory pack inc screws, idler, and 1 centre mechanism.	PAN3570325	PAN3570320	PAN35703201	1
B	3 Point Panic Bolt Set (Slave) Includes: push bar, 2 x pullman rod covers, 2 x rods, 2 x side or vertical pullman, 2 x pullman covers, accessory pack inc screws, idler, and 1 centre mechanism.	PAN3550325	PAN3550320	PAN355030	1
C	3 Point Push Pad Reversible (Master) Includes: push pad, 2 x pullman rod covers, 2 x rods, 2 x side or vertical pullman, 2 x pullman covers, accessory pack inc screws, idler, and 1 centre mechanism.	PAN3580325	PAN3580320	-	1
D	3 Point Push Pad Reversible (Slave) Includes: push pad, 2 x pullman rod covers, 2 x rods, 2 x side or vertical pullman, 2 x pullman covers, accessory pack inc screws, idler, and 1 centre mechanism.	PAN3560325	PAN3560320	-	1
E	Outside Access Kit Includes: lever handle, cylinder,3 keys, fixing screws, assembly instructions and drilling templates	PAN3610125	PAN3610120	PAN3610101	1

NB. Frame keeps are profile related and are supplied separately. For further information, please contact our sales team.

10 YEAR GUARANTEE

ANTIPANIC PH355/7 BS EN1125 CERTIFIED TO 3 7 6 0 1 4 2 1 A A

ANTIPANIC PH355/7 BS EN1125 CERTIFIED TO 3 7 6 0 1 4 2 1 A B

Yale Panic Bars

- A concealed panic bar kit comprising of panic bar and multi-point lock
- Panic bar comes with black covers and a green cross bar
- Door bolt supplied as standard is part number PAD17200SS (single door kit only see page 162)
- Panic bar system will work using standard keeps and packers compatible with Lockmaster door bolts
- Concealed panic bars give better compression and higher security than the standard face fixed panic bars
- Outside access kit for the Yale concealed panic bar allows entry via a key once fitted
- Outside access is key-retaining - once unlocked, the key can't be removed until the door is locked
- 10 year guarantee

DESCRIPTION	BACK & GREEN	BLACK	BOX QTY.
Panic Bar Kit for Composite/Ali Doors- (Non-handed) Includes: main mechanism with cover, idler mechanism with cover, cross arm, door Lock, 3 piece keep set (non-handed), and an accessory pack	YPB10003	-	1
Outside Access Kit Includes: tbc	-	YPB10004	1

NB. These panic bar systems will work using packers that suit the Lockmaster door bolts. For further information, please contact our sales team.

Omec Emergency Exit Hardware

Q
Quality
EN 1125:2008

- Fabricator-friendly surface mounted design
- Aluminium covers clip over the operating rods to give clean lines & vandalism protection
- Push bar latch mechanism tested to over a million cycles
- Designed and tested according to EN 1125:2008
- Suitable for doors up to 1200mm wide by 2500mm high
- Standard finish: powder coated black with RAL6024 green push bar
- Kit includes strikers to suit most PVCu timber & aluminium doors
- Optional push pad
- Also available external lever handle (fits doors 40-85mm thick)
- Not suitable for doors narrower that 800mm
- Not to be used on fire doors

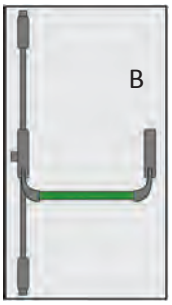

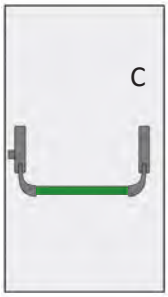

	DESCRIPTION	FINISH	CODE	BOX QTY.
A	3 Point Panic Latch Set (Active) Includes: center latch and striker, green push bar, side latches, side strikers, nylon plugs, fixing screws, assembly instructions and drilling templates	Black with green cross bar	OPB10025	1
B	3 Point Panic Bolt Set (Slave) Includes: center latch and striker, green push bar, top and bottom bolts, side striker, floor striker, nylon plugs, fixing screws, assembly instructions and drilling templates	Black with green cross bar	OPB10035	1
C	Central Latch and Striker Only Includes: side striker, nylon plugs, fixing screws, assembly instructions and drilling templates	Black	OPB62130	1
D	Push Pad Reverseable Oval Includes: photolumenescent insert (sticky back), nylon plugs, fixing screws, assembly instructions	photolumenescent insert	OPB60000	1
E	Omec Outside Access Kit Includes: 3 keys, fixing screws, assembly instructions and drilling templates	Black	OPB20005	1
	Oval Push Bar - 1200mm	Green	OPB31200	1
	Floor Striker	Black	OPB90011	1
	Side Strike - Standard Lip	Black	OPB90051	1
	Side Strike - Medium Lip	Black	OPB90052	1
	Side Strike - Long Lip	Black	OPB90053	1
	Wedge Striker for Aluminium Profiles	Black	OPB90054	1

TYPE	SYMBOL
Guarantee	10 YEARS MECHANICAL / 25 YEARS CORROSION
SBD	SBD Approved
PAS 24	PAS 24
TS 007 is a standard developed in response to concerns over cylinder attacks. The standard is characterised by a 3 star rating system and can be achieved by combining a 1 star cylinder with 2 star security door furniture or by using a standalone 3 star cylinder.	TS 007 2 approved

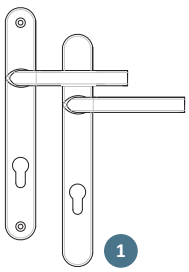

Lever/Lever

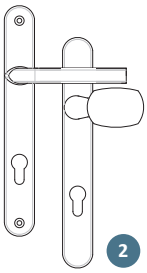

Lever Pad

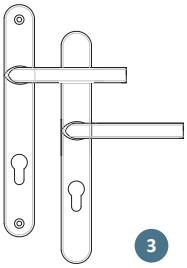

Lever/
Offset Lever

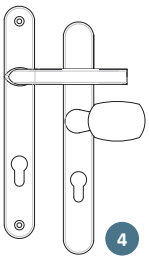

Lever/
Offset Pad

TROJAN
...The Strength of Hardware Design

DIAGRAM NO. ABOVE	HANDLE TYPE: INTERNAL: LEVER	EXTERNAL: LEVER	EXTERNAL: PAD	EXTERNAL: OFFSET LEVER	EXTERNAL: OFFSET PAD	SPRUNG	MEASUREMENTS (mm): PZ LEVER TO CYLINDER	BACKPLATE LENGTH	BACKPLATE WIDTH	SCREW TO SCREW	SECURITY: PAS 24	SECURITY: TS 007	GUARANTEES: STAINLESS STEEL	CORROSION (YEARS)	MECHANICAL (YEARS)	BRAND	PAGE
1	•	•				•	92	212	35	122					10	Trojan	348
1	•	•				•	92	243	30	210					10	Trojan	349
1	•	•				•	92	212	35	122			•	25	10	Trojan	350
1	•	•				•	92	243	30	210			•	25	10	Trojan	351
1	•	•				•	92	212	35	122	•	2 Star	•	25	10	Trojan	352
1	•	•				•	92	243	30	210	•	2 Star	•	25	10	Trojan	353
2	•		•			•	92	212	35	122					10	Trojan	348
2	•		•			•	92	243	30	210	•	2 Star	•	25	10	Trojan	353
3	•			•		•	92/62	243	30	210	•	2 Star	•	25	10	Trojan	353
4	•				•	•	92/62	243	30	210					10	Trojan	349
4	•				•	•	92/62	243	30	210	•	2 Star	•	25	10	Trojan	353

TROJAN ...The Strength of Hardware Design

Sparta 212mm Sprung Door Handles

- Designed to suite with Sparta espag handles (page 59), tilt/turn handles (page 84), hinges (pages 255, 258 & 261-262) and letterplates (pages 265-267)
- Backplate is 212 x 35mm internal & external
- Screw to screw measurement: 122mm
- Centre measurement: 92mm PZ
- Also available in stainless steel variants (page 350 & 352)

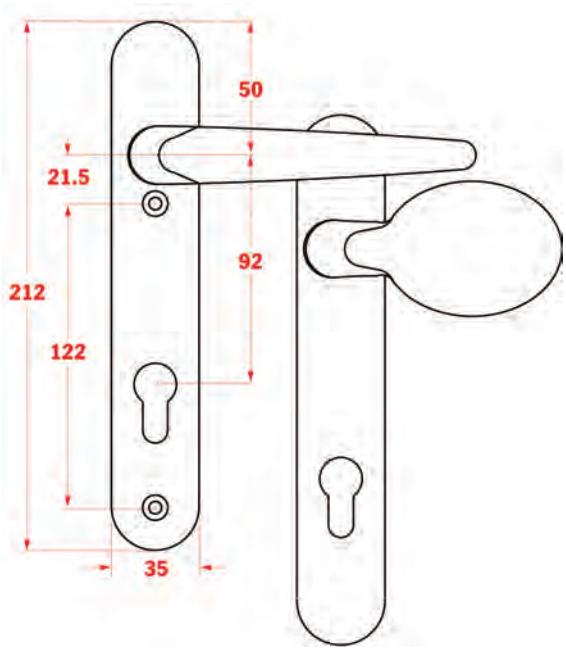

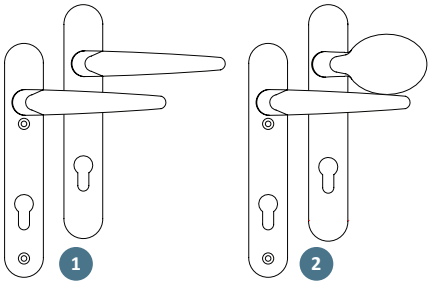

TYPE		WHITE	BLACK	PVD GOLD	CHROME	SATIN SILVER	BOX QTY.
LEVER/LEVER	1	HDL90011	HDL95011	HDL98011	HDL92011	HDL91011	10
LEVER/PAD	2	HDL90012	HDL95012	HDL98012	HDL92012	HDL91012	10

Sparta 240mm Sprung Door Handles

TROJAN ...The Strength of Hardware Design

- Designed to suite with Sparta espag handles (page 59), tilt/turn handles (page 84), hinges (pages 255, 258 & 261-262) and letterplates (pages 265-267)
- Backplate is 243 x 35mm internal & external
- Screw to screw measurement: 211mm
- Centre measurement: 92mm or 92/62mm PZ
- Also available in stainless steel variants (page 351 & 353)

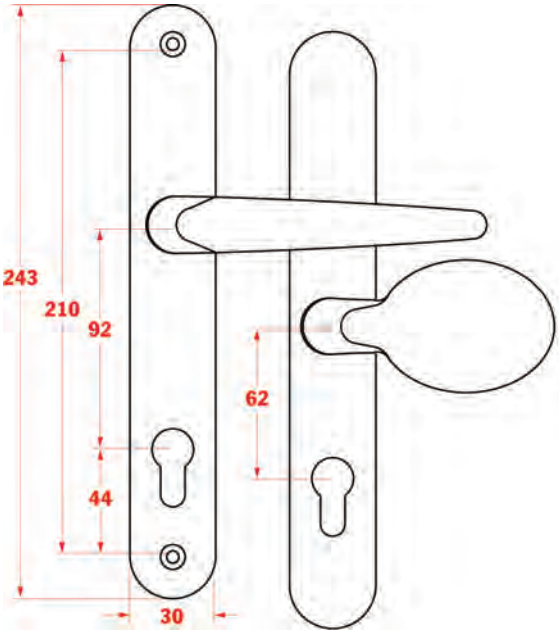

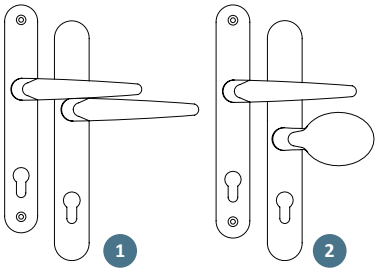

TYPE	WHITE	BLACK	PVD GOLD	CHROME	SATIN SILVER	BOX QTY.
LEVER/LEVER (1)	HDL90511	HDL95511	HDL98511	HDL92511	HDL91511	10
LEVER/OFFSET PAD (2)	HDL90532	HDL95532	HDL98532	HDL92532	HDL91512	10

TROJAN
...The Strength of Hardware Design

Sparta 212mm Sprung Door Handles Stainless Steel Version

- Designed to suite with Sparta espag handles (page 59), tilt/turn handles (page 84), hinges (pages 255, 258 & 261-262) and letterplates (pages 265-267)
- Backplate is 212 x 35mm internal & external
- Screw to screw measurement: 122mm
- Centre measurement: 92mm PZ
- Available in stainless steel combi (external stainless steel, internal standard)
- Stainless steel versions are manufactured in 304 stainless steel and come with an impressive 20+ year corrosion guarantee for the ultimate corrosion resistance
- Stainless steel versions cycle tested to 50,000 cycles PAS 24 compliant

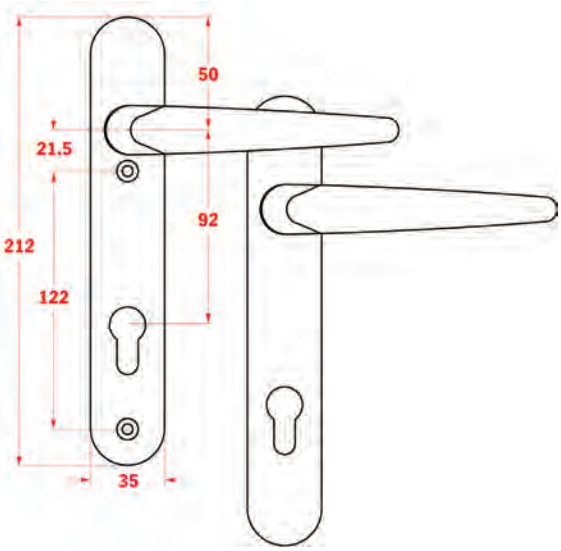

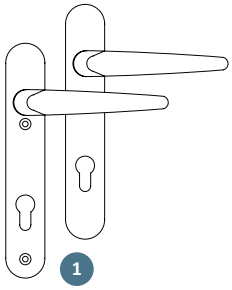

TYPE	PVD GOLD	BRUSHED GOLD	CHROME	BRUSHED STAINLESS	BOX QTY.
LEVER/LEVER (1)	HDL98011C	-	HDL92011C	-	10

Sparta 240mm Sprung Door Handles Stainless Steel Version

TROJAN
...The Strength of Hardware Design

- Designed to suite with Sparta espag handles (page 59), tilt/turn handles (page 84), hinges (pages 255, 258 & 261-262) and letterplates (pages 265-267)
- Backplate is 243 x 35mm internal & external
- Screw to screw measurement: 211mm
- Centre measurement: 92 or 92/62mm PZ
- Available in stainless steel combi (external stainless steel, internal standard)
- Stainless steel versions are manufactured in 304 stainless steel and come with an impressive 20+ year corrosion guarantee for the ultimate corrosion resistance
- Stainless steel versions tested to 50,000 cycles PAS 24 compliant

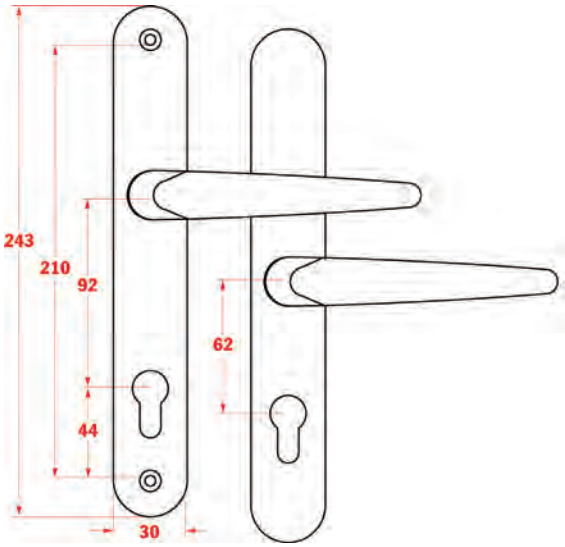

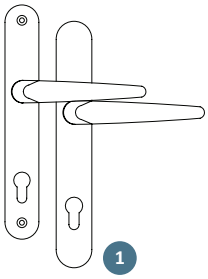

TYPE	PVD GOLD	BRUSHED GOLD	CHROME	BRUSHED STAINLESS	BOX QTY.
LEVER/LEVER 1	HDL98531SC	HDL97531SC	-	HDL93531SC	10

...The Strength of Hardware Design

TS 007 2 Star PAS24 220mm Door Handle Stainless Steel Version

The Trojan TS 007 2 star door handle is a high quality, cost-effective handle incorporates a patented spring cassette to eliminate 'drooping handle' effect. The handle can be used in conjunction with a 1 star cylinder to still achieve the requirements of Document Q.

- Manufactured from 304 stainless steel
- Tested to 50,000 cycles
- Conforms to BS 1906
- Corrosion tested in excess of 1,000 hours (based on BS EN 1670)
- TS 007 accredited
- Abusive load tested to BS6462

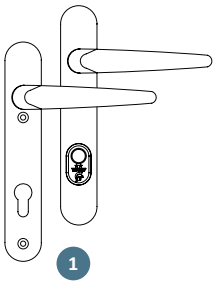

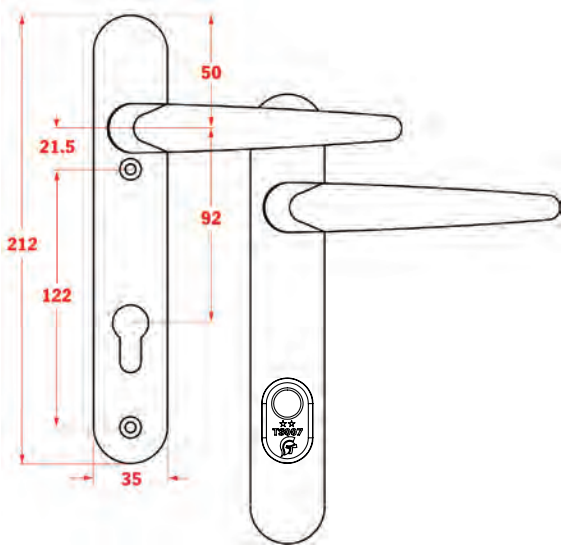

TYPE	WHITE	BLACK	PVD GOLD	CHROME	BOX QTY.
LEVER/LEVER 1	HDL90611CC	HDL95611CC	HDL98611CC	HDL92611CC	10

TS 007 2 Star PAS24 240mm Door Handle Stainless Steel Version

TROJAN
...The Strength of Hardware Design

The Trojan TS 007 2 star door handle is a high quality, cost-effective handle that incorporates a patented spring cassette to eliminate 'drooping handle' effect. The handle can be used in conjunction with a 1 star cylinder to still achieve the requirements of Document Q.

- Manufactured from 304 stainless steel
- Tested to 50,000 cycles
- Conforms to BS 1906
- Corrosion tested in excess of 1,000 hours (based on BS EN 1670)
- TS 007 accredited
- Abusive load tested to BS6462

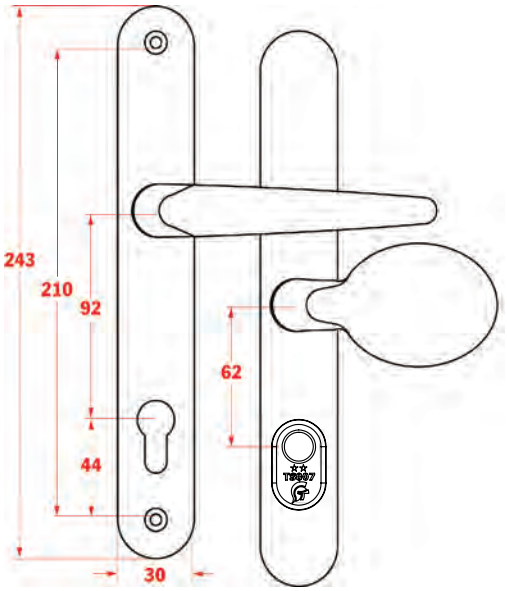

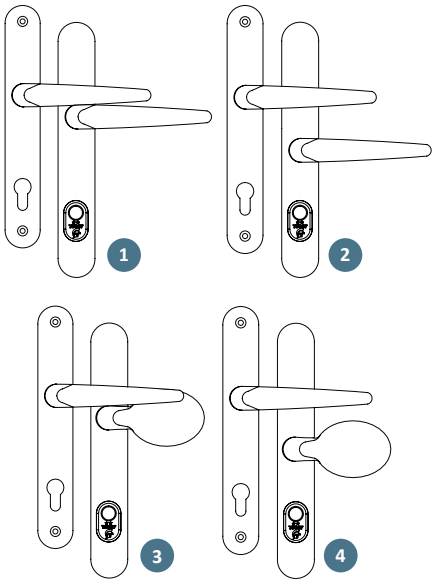

TYPE		WHITE	BLACK	PVD GOLD	CHROME	BOX QTY.
LEVER/LEVER	1	HDL90711CC	HDL95711CC	HDL98711CC	HDL92711CC	10
LEVER/OFFSET LEVER	2	HDL90731CC	HDL95731CC	HDL98731CC	HDL92731CC	10
LEVER/PAD	3	HDL90712CC	HDL95712CC	HDL98712CC	HDL92712CC	10
LEVER/ OFFSET PAD	4	HDL90732CC	HDL95732CC	HDL98732CC	HDL92732CC	10

TYPE	SYMBOL YALE | EUROSPEC
Anti-bump	
Anti-drill	
Anti-pick	
Anti-plug	
Anti-snap	
BS EN	BS EN 1303:2005

TYPE	SYMBOL
Fire Door	FD30/60
Guarantee	
Kitemarked	
SBD	
Security Level	
TS 007 is a standard developed in response to concerns over cylinder attacks. The standard is characterised by a 3 star rating system and can be achieved by combining a 1 star cylinder with 2 star security door furniture or by using a standalone 3 star cylinder.	

SECURITY LEVEL	ANTI-BUMP	ANTI-DRILL	ANTI-PICK	ANTI-PLUG	ANTI-SNAP	BS EN	FIRE DOOR	KITE MARKED STAMPED	SBD	GUARANTEE	BRAND	PAGE
TS 007 1 Star	•	•	•	•	•	1303:2005	30/60	•			Eurospec	356
	•	•	•		•	1030:2005		•			Yale	357
	•	•	•			1303:2005		•	•	10 Years	Yale	358-359
TS 007 3 Star	•	•	•		•	1303:2005		•		10 Years	Yale	360-361

Measuring a Profile Cylinder

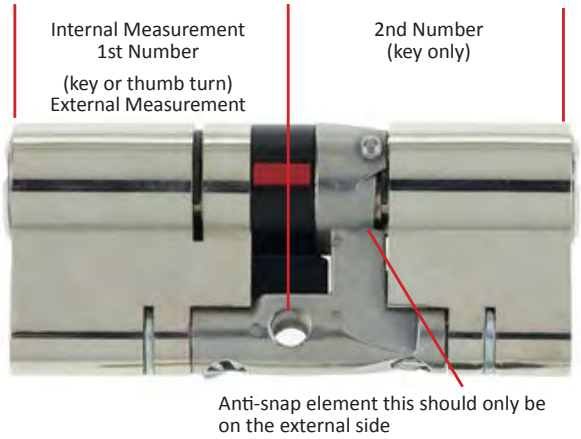

Please Note: Most cylinders can be reversed, but if they include an anti-snap part this should always be on the external size.
See the image on the left of the Yale TS007 3 Star Platinum Profile cylinder

the internal measurement is the 1st number, the external measurement is the 2nd number, i.e.. 40/50 = 40 internal / 50 external

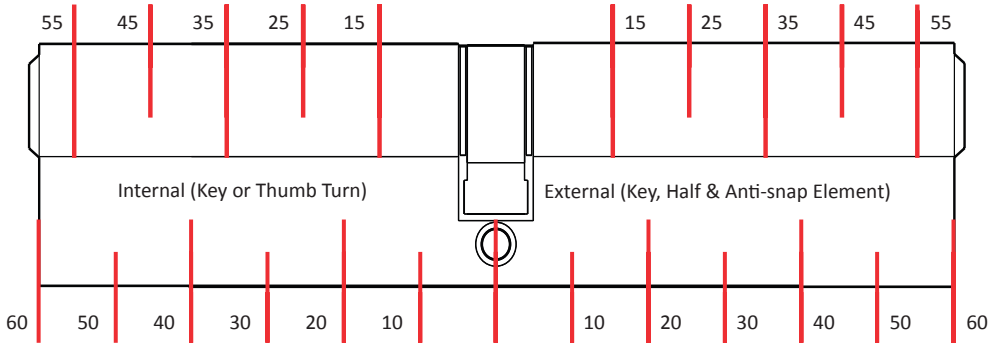

All dimensions are in mm

PROFILE CYLINDER TYPE	PAGE
Key/Key	356-358, 360-361
Thumb Turn/Key	356-357, 359-361
Key/Key Keyed-alike	356-358, 360-361

EUROSPEC

Eurospec MPX6 1 Star Kitemarked Profile Cylinder

TS 007 1 approved

BS EN 1303:2005

FD30/60

- Anti-bump/anti-snap kitemarked cylinder
- TS 007 1 star approved - TS 007:2012
- Supplied with 3 keys
- Available from stock in Key/Key and keyed alike pairs with master suiting available on special order basis
- Snap off (Sacrificial) front section, anti-snap one side on even split cylinders, both sides of unequal sized cylinders - Non-handed product.
- Suitable for use on fire doors to 60mins
- Tested to BS EN 1303:2005, EN 1634 Part 1:2000
- Anti-drill
- Anti-snap
- Anti-plug Pull
- Anti-pick
- Anti-bump
- For PAS 24 requirements this cylinder must be fitted with a PAS 24 door handle

Additional Information

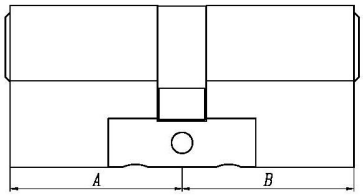

CHROME | BRASS

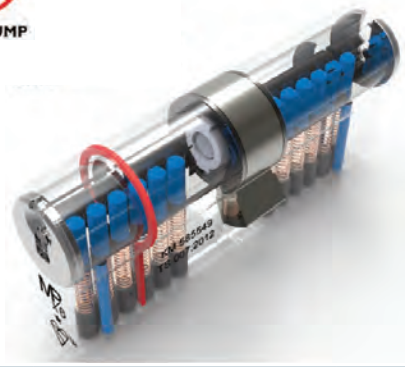

SIZE mm	CHROME	BRASS	BOX QTY.
6 Pin Anti-bump/Anti-snap Key/Key Profile Cylinders			
35/35	CYL435351	CYL435353	10
40/40	CYL440401	CYL440403	10
40/50	CYL440501	CYL440503	10
40/60	CYL440601	CYL440603	10
45/45	CYL445451	CYL445453	10
45/50	CYL445501	CYL445503	10
45/55	CYL445551	CYL445553	10
50/50	CYL450501	CYL450503	10

SIZE mm	CHROME	BRASS	BOX QTY.
6 Pin Anti-bump/Anti-snap Key/Thumb Turn Profile Cylinders			
35/35	CYL435352	CYL435354	10
40/60	CYL440602	CYL440604	10
50/50	CYL450502	CYL450504	10
6 Pin Anti-bump/Anti-snap Key/Key Keyed-alike Profile Cylinders			
35/35	CYP435351	CYP435353	5 pairs
45/50	CYP445501	CYP445503	5 pairs
45/55	CYP445551	CYP445553	5 pairs
50/50	CYP450501	CYP450503	5 pairs

Yale TS 007 1 Star Superior Kitemarked Profile Cylinder

Superior has achieved the following BS EN 1030:2005 8 digit classification: 16000C62 TS 007 is a new standard introduced to try to combat the problem of lock snapping. When trying to replace or upgrade the security to TS 007 you must ensure that you reach the 3 star maximum rating. This can be achieved by using the relevant hardware that carries a star rating and can be used in any combination together to create a 3 star rating. The Hoppe Secured By Design handle has a 2 star rating, you can get a 3 star rating by using this cylinder which is a 1 star anti-bump, anti-snap cylinder.

- Sacrificial cut
- Resistance to bumping
- Resistance to picking
- Resistance to drilling
- 12 telescopic pin tumbler system
- 3 keys as standard
- 4 anti-pick pins per side
- Patented anti-snap & anti-bump features
- Tested to the highest grade of BS EN 1303:2005 standard
- Fully approved by BSI and Kitemarked
- Available in polished chrome and brass

Additional Information

Anti-drill Anti-pick Anti-snap Anti-bump

Security Level

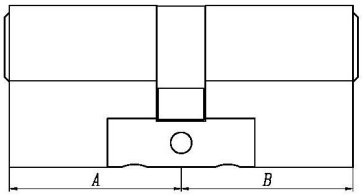

CHROME BRASS

SIZE mm	CHROME	BRASS	BOX QTY.
6 Pin Anti-bump/Anti-snap Key/Key Profile Cylinders			
35/35	CYL835351	CYL835353	20
40/40	CYL840401	-	20
40/50	CYL840501	CYL840503	20
40/55	CYL840551	CYL840553	20
45/45	CYL845451	CYL845453	20
45/50	CYL845501	CYL845503	20
45/55	CYL845551	CYL845553	20
50/50	CYL850501	CYL850503	20

SIZE mm	CHROME	BRASS	BOX QTY.
6 Pin Anti-bump/Anti-snap Key/Thumb Turn Profile Cylinders			
35/35	CYL835352	CYL835354	20
45/50	CYL845502	CYL845504	20
6 Pin Anti-bump/Anti-snap Key/Key Keyed-alike Profile Cylinders			
35/35	CYP835351	CYP835353	10 pairs
40/40	CYP840401	CYP840403	10 pairs
40/50	CYP840501	CYP840503	10 pairs
45/45	CYP845451	CYP845453	10 pairs
45/50	CYP845501	CYP845503	10 pairs
45/55	CYP845551	CYP845553	10 pairs
50/50	CYP850501	CYP850503	10 pairs

Yale KM Superior 1 Star Kitemarked Key/Key Profile Cylinder

The Yale KM Superior Euro Profile cylinder has been developed to provide resistance against common cylinder attack methods. The KM Superior offers British Kitemarked TS 007:2014 1 star security and has been tested to the British Standard BS EN 1303:2005. Suitable as a replacement product on PVCu, wood and composite doors this cylinder is Secured by Design approved and recommended for use on doors that require a high level of security and attack protection.

- Replacement 6 pin Euro Profile Cylinder
- Available in Euro Single and Euro Turn
- BSI Kitemark Approved - KM 532920
- TS 007 1 Star Cylinder
- Secured by Design approved
- High security level
- 10 year guarantee

Additional Information

Anti-drill | Anti-pick | Anti-bump | Security Level

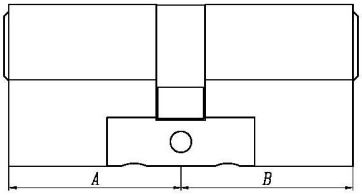

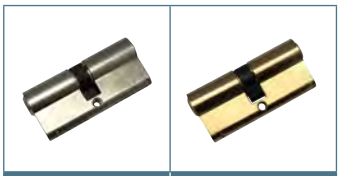

CHROME | BRASS

SIZE mm	CHROME	BRASS	BOX QTY.
TS 007 1★ Key/Key Profile Cylinders			
35/35	CYL335351	CYL335353	10
35/45	CYL335451	-	10
40/40	CYL340401	-	10
45/50	CYL345501	CYL345503	10
45/55	CYL345551	CYL345553	10
50/50	CYL350501	CYL350503	10

SIZE mm	CHROME	BRASS	BOX QTY.
TS 007 1★ Key/Key Keyed-alike Profile Cylinders			
35/35	CYP335351	-	5 pairs
35/45	CYP335451	-	5 pairs
40/40	CYP340401	-	5 pairs
45/50	CYP345501	-	5 pairs
50/50	CYP350501	-	5 pairs

TS 007 1 approved

10 YEAR GUARANTEE

SBD Approved

Yale KM Superior 1 Star Kitemarked Thumb Turn Profile Cylinder

The Yale KM Superior Euro Profile cylinder has been developed to provide resistance against common cylinder attack methods. The KM Superior offers British Kitemarked TS 007:2014 1 star security and has been tested to the British Standard BS EN 1303:2005. Suitable as a replacement product on PVCu, wood and composite doors this cylinder is Secured by Design approved and recommended for use on doors that require a high level of security and attack protection.

- Replacement 6 pin Euro Profile Cylinder
- Available in Euro Single and Euro Turn
- BSI Kitemark Approved - KM 532920
- TS 007 1 Star Cylinder
- Secured by Design approved
- High security level
- 10 year guarantee

Additional Information

Anti-drill | Anti-pick | Anti-bump | Security Level

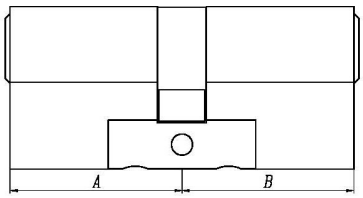

CHROME | BRASS

SIZE mm	CHROME	BRASS	BOX QTY.
TS 007 1★ Key/Thumb Turn Profile Cylinders			
35/35	CYL335352	CYL335354	10
40/40	CYL340402	-	10
45/45	CYL345452	-	10
45/50	CYL345502	CYL345504	10
50/45	CYL350452	CYL350454	10
50/50	CYL350502	CYL350504	10

Yale TS 007 3 Star Platinum Kitemarked Profile Cylinder

BS EN 1303:2005

The Yale Platinum 3 star euro profile cylinder has been independently tested by The British Standards Institution and awarded the BSI BSI Kitemark TS 007:2014 3 star accreditation. That makes this cylinder the perfect choice for professionals in need of a proven, high-security solution capable of providing maximum defence against common methods of cylinder attack.

- Anti-snap, sacrificial front section
- Anti-pick, anti-bump, anti-screw, anti-pull and anti-drill
- Superior strength with cylinder stability system for superior protection
- Horizontal keyway
- Flat reversible dimple key with new stylish nylon key bow
- Key card for easy code identification and key duplication
- Available in standard key/key, thumb turn and keyed-alike in pairs. Brass and Nickel finishes
- TS 007 2014 3 star approved
- BS EN 1303:2005 approved
- KM 559658

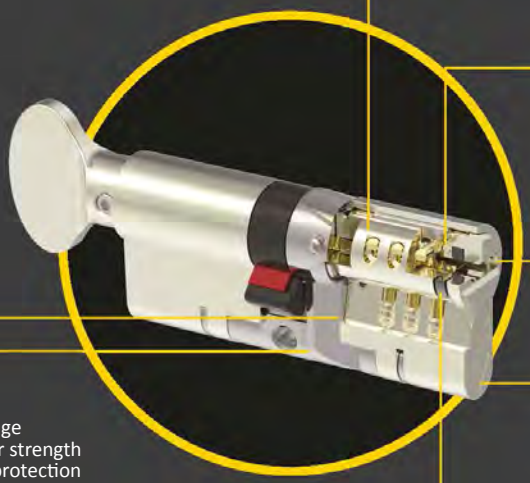

Anti-Bump
Specialised side pins provide bump resistance.

Anti-Snap
A small section of the cylinder is sacrificed under attack, leaving the remainder of the cylinder intact and your door safely locked.

Anti-Pick
Unique multi shear-line technology designed to resist lock picking and bumping.

Horizontal Keyway
With reversible flat key for easy key entry.

Inner Strength
The dedicated central bridge delivers unparalleled inner strength to the cylinder providing protection even if the cylinder is attacked from the outside.

Anti-Drill
Hardened steel protection incorporated within the cylinder provides undeniable resistance against drill attacks.

Certified
Approved to TS 007:2014 3 star - the highest current certified level.
BSI accredited to KM 559658
Tested to BS EN 1303:2005

Additional Information

Anti-drill Anti-pick Anti-snap Anti-bump

Security Level

Yale TS 007 3 Star Platinum Kitemarked Profile Cylinder

Please Note: 'SIZE mm' column, the **in**ternal measurement is the **1st** number, the **ex**ternal measurement is the **2nd** number, i.e.. 40/50 = **40 in**ternal / **50 ex**ternal

Internal Measurement 1st Number (key or thumb turn)

External Measurement 2nd Number (key only)

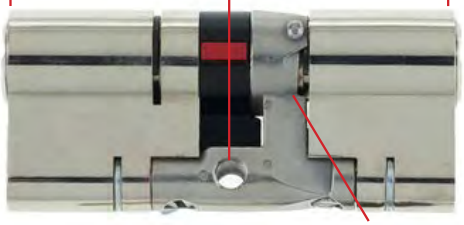

Anti-snap element this should only be on the external side

SIZE mm	CHROME	BRASS	BOX QTY.
TS007 3★ Profile Cylinders			
35/35	CYL935351	CYL935353	20
35/45	CYL935451	CYL935453	20
35/55	CYL935551	CYL935553	20
40/40	CYL940401	CYL940403	20
40/45	CYL940451	CYL940453	20
40/50	CYL940501	CYL940503	20
40/55	CYL940551	CYL940553	20
45/35	CYL945351	CYL945353	20
45/40	CYL945401	CYL945403	20
45/45	CYL945451	CYL945453	20
45/50	CYL945501	CYL945503	20
45/55	CYL945551	CYL945553	20
50/40	CYL950401	CYL950403	20
50/45	CYL950451	CYL950453	20
50/50	CYL950501	CYL950503	20
55/40	CYL955401	CYL955403	20
55/45	CYL955451	CYL955453	20
60/40	CYL960401	CYL960403	20
TS007 3★ Thumb Turn Profile Cylinders			
35/35	CYL935352	CYL935354	20
40/40	CYL940402	CYL940404	20
40/50	CYL940502	CYL940504	20
45/45	CYL945452	CYL945454	20
45/50	CYL945502	CYL945504	20
45/55	CYL945552	CYL945554	20
50/40	CYL950402	CYL950404	20
50/45	CYL950452	CYL950454	20
50/50	CYL950502	CYL950504	20
55/45	CYL955452	CYL955454	20
TS007 3★ Key/Key Keyed-alike Profile Cylinders			
35/35	CYP935351	CYP935353	10 pairs
40/40	CYP940401	CYP940403	10 pairs
40/50	CYP940501	CYP940503	10 pairs
40/55	CYP940551	-	10 pairs
45/45	CYP945451	CYP945453	10 pairs
45/50	CYP945501	CYP945503	10 pairs
50/40	CYP950401	CYP950403	10 pairs
50/45	CYP950451	CYP950453	10 pairs
50/50	CYP950501	CYP950503	10 pairs
55/40	CYP955401	CYP955403	10 pairs
55/45	CYP955451	CYP955453	10 pairs

TS 007:2014

TS 007 is a standard developed in response to concerns over cylinder attacks. The standard is characterised by a 3 star rating system and can be achieved by combining a 1 star cylinder with 2 star security door furniture or by using a standalone 3 star cylinder. The Platinum series cylinder is approved to TS 007 3 stars and does not require any additional security furniture.

Maintenance and care of your Yale cylinder

Yale recommend regular lubrication of your Yale cylinder locks to ensure continuous trouble-free performance and operation.

For this we recommend using a PTFE-based lubricant. A small amount of lubricant should be applied to the key and then inserted into the cylinder. Rotate the key a couple of times in line with the normal locking function. Remove the key from the cylinder and wipe away any remaining lubricant to ensure it isn't transferred onto other objects.

FITTING POSITION		TELESCOPIC SLEEVES	FLAP ANGLE	SIZES			SECURITY			GUARANTEE			BRAND	NAME	PAGE
PANEL	MIDRAIL			APERTURE	INTERNAL	EXTERNAL	PAS 24	DOC Q	TS 008	STAINLESS STEEL	CORROSION	MECHANICAL			
•		20-40mm	180º	263 x 50mm	300 x 70mm	300 x 70mm				•	25 Years	10 Years	Trojan	Unicorn 12”	363
	•	40-80mm	180º	263 x 50mm	300 x 70mm	300 x 70mm				•	25 Years	10 Years	Trojan	Unicorn 12”	363
	•	40-75mm		246 x 49.4mm	300.5 x 98.4 x 52mm	300.5 x 96mm	•	•	•	•	25 Years	10 Years	Yale	Post-master	364-365

TYPE	SYMBOLS	TYPE	SYMBOLS
PAS 24	PAS 24	**BS Kite Mark**	TS008: 2015
Guarantees	10 YEAR GUARANTEE 10 YEAR MECHANICAL GUARANTEE 10 YEAR GUARANTEE; 25 YEAR GUARANTEE 25 YEAR SURFACE FINISH GUARANTEE 25 YEAR GUARANTEE	**Doc Q**	DOCUMENT Q APPROVED
TS 008	TS 008 is a rating for the letter plate, or flap, covering the door aperture for receipt of postal items, together with a letter box on the inside of doors, walls or panels. This is a security requirement of PAS24 & document Q which deals with phishing through a letterplate.		

Trojan Unicorn 12'' Range Letterplate

TROJAN ...The Strength of Hardware Design

- A unique and elegant design
- Letter flaps and torsion springs are made from stainless steel for ultimate corrosion resistance
- Flaps open to 180 degrees, eliminating any excess leverage on pivot points
- External flap has a complete peripheral seal that also forms a full thermal and acoustic barrier
- Cycle tested to 100,000 operations
- Available in a choice of finishes with or without colour coded end caps
- Detachable lugs enabling face fix on panel
- Telescopic sleeves for panel fitting 20 - 40mm and midrail fitting 40 - 80mm which suits doors up to 70mm thick
- Overall letterplate size 300 x 70mm

No Boss

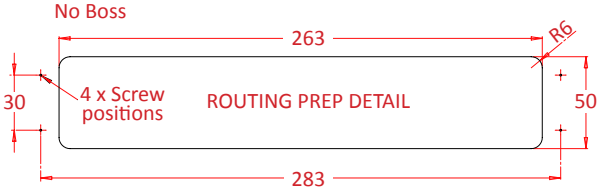

With Boss

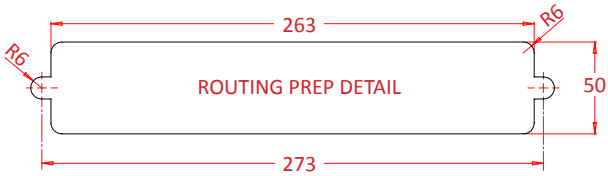

FINISH		FITTING POSITION		BOX QTY.
FLAP	END CAP	PANEL	MIDRAIL	
BLACK	BLACK	LBX81015	LBX80005	10
SATIN SILVER	BACK	-	LBX80001	10
PVD CHROME	BLACK	-	LBX80002	10
PVD GOLD	BLACK	-	LBX80009	10
WHITE	BLACK	-	LBX80000	10
PVD CHROME	PVD CHROME	LBX81012	LBX81002	10
BRUSHED STEEL	BRUSHED STEEL	LBX81013	LBX81003	10
PVD GOLD	PVD GOLD	LBX81019	LBX81009	10
WHITE	WHITE	LBX81010	LBX81000	10

Yale Postmaster Professional TS 008 Letterplate

The patented Postmaster Professional TS 008 Letterplate is designed to meet the exacting requirements of TS 008. It's suitable for doorsets that need to be Document Q or PAS 24: 2016 compliant. Manufactured from 304 Stainless Steel for ultimate corrosion resistance, its simple but elegant styling will complement any doorface.

- TS 008 accredited
- Conforms to PAS 24: 2016 and approved Document Q
- Suitable for both composite doors and PVCu doors (range from 40mm to 75mm)
- Inner protective housing has unique concealed hinge mechanism to prevent attack
- Inner flap has a positive stop feature for maximum protection from 'fishing'
- Will fit any door to meet TS 008 accreditation without the need to retest
- Available in white, PVD gold, chrome and satin stainless steel, external finishes from stock. Other finishes available to order including brushed stainless steel and black.
- The internal letterplate can be colour coded to match the door colour
- Guarantee 25 years anti-corrosion available on all Stainless Steel product finishes
- Guarantee 10 years mechanical
- Overall letterplate size:
  External: 300.5 x 96mm
  Internal: 300.5 x 98.4 x 52mm

Yale Postmaster Professional TS 008 Letterplate

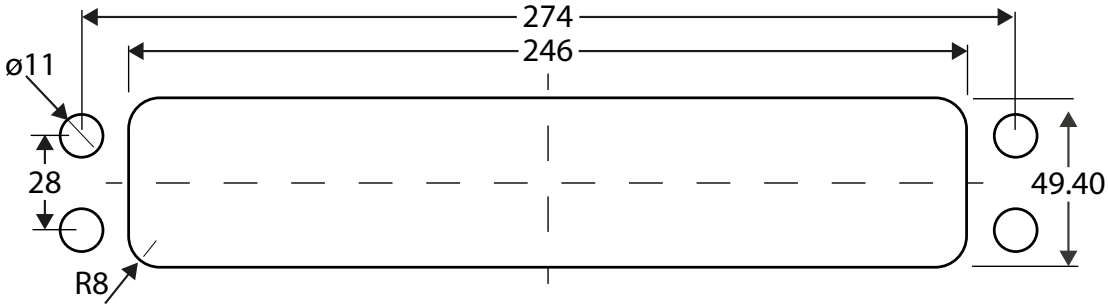

Product materials:
- External flap is manufactured from 304 stainless steel For ultimate corrosion resistance (galvanised mild steel For painted finishes)
- Internal flap manufactured from die-cast zinc

Testing:
- Corrosion tested to BS EN 1670 Grade 5
- Cycle test – opening and closing action tested To 20,000 cycles
- PAS 24: 2016 compliant and approved Document Q
- TS 008:2015 compliance

Adjustments:
- For composite doors 0793-2001 (4 Screws m4 x 30mm csk pozi zn)
- For PVCu doors 0793-2002 (4 Screws m4 x 60mm csk pozi zn)

FLAP FINISH						
OUTER	WHITE	SATIN STAINLESS STEEL	CHROME	BRUSHED STAINLESS STEEL	PVD GOLD	BLACK
FLAP FINISH						
INNER	WHITE	WHITE	WHITE	WHITE	WHITE	BLACK
PART CODE	LBX82000	LBX82001	LBX82002	LBX82003	LBX82009	LBX82015
BOX QTY.	10	10	10	10	10	10

Cabin Hooks

- Cabin hooks available in three sizes 6'', 8'' and 10''

SIZE	BRASS	CHROME	BOX QTY.
6 inch	CHK10069	CHK10111	10
8 inch	CHK10089	CHK10115	10
10 inch	CHK10109	CHK10117	10

Carlisle Brass AA75 Heavy Duty Door Chain

up to 180n FORCE

- Breaking strain 180 newtons.
- Dimensions: Chain Retainer 60 x 16mm, Chain Length 200mm & Angle Plate 46 x 32 x 38mm.
- Available in chrome plate, polished brass and satin chrome.
- Complete with screws.

BRASS	CHROME	SATIN CHROME	BOX QTY.
DCH79135C	DCH79136C	DCH79155	25

Yale WS16 Door Chain & Bolt

2 YEAR GUARANTEE MECHANICAL

SBD Approved

- Integral steel dead bolt for additional security
- Heavy duty chain helps protect against cropping attack
- Safe caller identification
- Angled fixing screws help door restraint against a forced attack
- Successfully tested to DHF TS 003:2012 - Door Chains and Limiters
- Secured By Design approved

BRASS	BOX QTY.
YDC40008A	1

TOOLS, FIXINGS, & CONSUMABLES

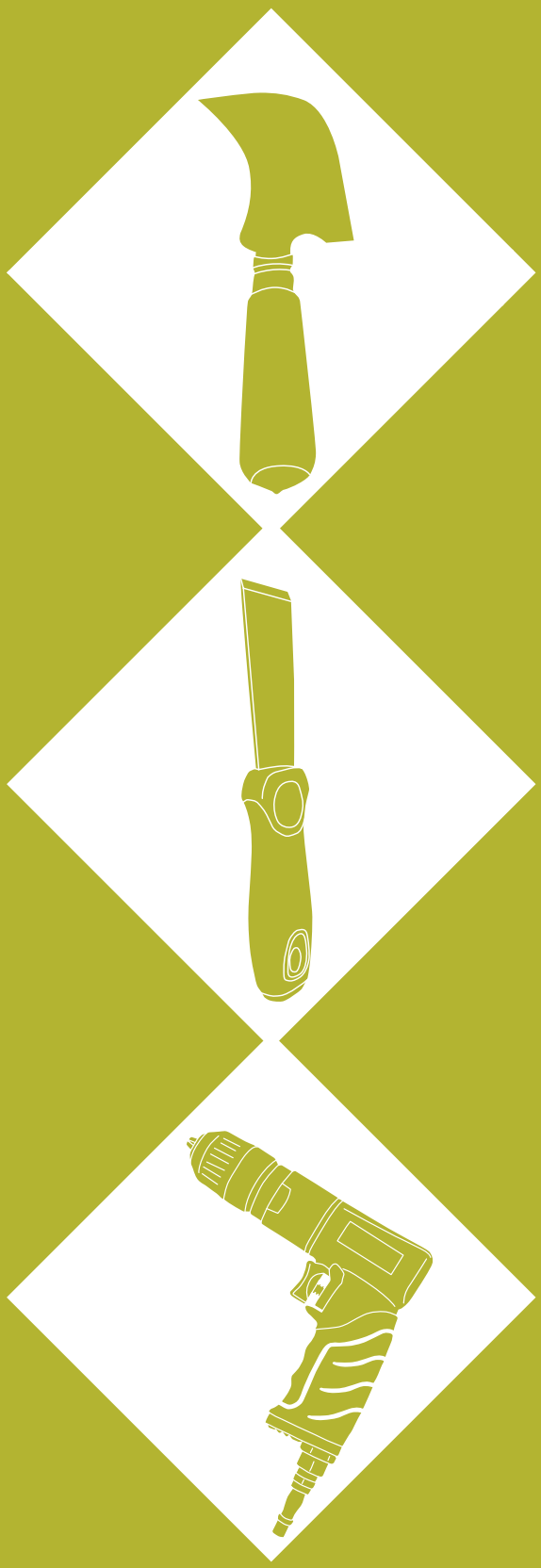

Air Tools	368-371
Air Tool Accessories	370-373
Machinery Consumables	374-380
Silicones	384-386
Sealants	388
Caulk/Mastic Guns	389
Glues	382-383, 387
Lacquer Spray	390
Repair Kits & Pens	391
Fixing Foam & Fillers	392-395
Silicone Sprays	396
Cleaners	396-397
Dust Sheets & Dust Pans	398
Tape	398-399
Glazing Tape	399
Draught Excluders	400-402
Glazing Packers	402-403
Glass Retention	404
Glazing Tools	405-407
Gasket	407
Cutters	408-409
Deburring Tools	409
Knives	410-413
Chisels	414
Wrecking Bars	415
Hammers	416
Glazing Mallets	416-417
Lead Dresser & Sprue Guide	417
Saws, Hacksaws & Coping Saws	418-419
Files & Sandpaper	420-421
Allen Keys	423
Vices, Clamps & Air Wedges	424
Countersinks	424
Tap and Die Set & Drill Bits	425-428
Screws	429-430
Fixing Anchors	431
Window Fixings & Cleats	431
Screwdrivers & Bits	432-434
Sockets & Spanners	435
Measuring Equipment	436-439
Seam Rollers, Trowels & Buckets	440
Tool Boxes	441
Gloves	442
PPE	442-444
Roller Stands	445
Loading, Ladders & Platforms	446-447
Machinery	448

3mm Dentist Drill

- Speed: 22,000rpm
- Av CFM: 4
- Inlet: 1/4" BSP
- Collet size: 3mm

PART CODE	BOX QTY.
ADD10000	1

3/8” Straight Drill

- Speed: 4,000rpm
- Av CFM: 4
- Inlet: 1/4” BSP
- Chuck size: 10mm

PART CODE	BOX QTY.
KAD10003	1

Chuck Key

PART CODE	BOX QTY.
CKK10000	1

3/8” Reversible Drill Only 82dB

- Speed: 1,800rpm
- Av CFM: 4
- Inlet: 1/4” BSP
- Chuck size: 10mm

PART CODE	BOX QTY.
KAD10001A	1

Chuck Key

PART CODE	BOX QTY.
CKK10000	1

3/8" Reversible Keyless Chuck Drill Only 82dB

- Speed: 1,800rpm
- Av CFM: 4
- Inlet: 1/4" BSP
- Chuck size: 10mm

PART CODE	BOX QTY.
KAD10000	1

1/2" Reversible Keyless Chuck Drill

- Speed: 750rpm
- Av CFM: 4
- Inlet: 1/4" BSP
- Chuck size: 1/2"

PART CODE	BOX QTY.
KAD50000	1

1/4” Reversible Screwdriver Medium Torque Only 82dB

- Speed: 1,800rpm
- Av CFM: 4
- Inlet: 1/4” BSP

PART CODE	BOX QTY.
ARD10000	1

1/4" Reversible Screwdriver - High Torque

- Speed: 800rpm
- Av CFM: 4
- Inlet: 1/4" BSP

PART CODE	BOX QTY.
SDR10000	1

Air Jitterbug Sander

- Speed: 8,500rpm
- Av CFM: 4
- Inlet: 1/4" BSP
- Pad size: 90-170mm

PART CODE	BOX QTY.
ASJ10000	1

D/A Sander

- Speed: 10,000rpm
- Av CFM: 4
- Inlet: 1/4" BSP
- Pad size: 150mm

PART CODE	BOX QTY.
ASB10001	1

Professional Orbital Palm Sander

- Speed: 10,000rpm
- Av CFM: 4
- Inlet: 1/4" BSP
- Pad size: 150mm
- Non Vacuum

PART CODE	BOX QTY.
ASP10000	1

Air Belt Sander 10 x 330mm

- Speed: 16,000rpm
- Av CFM: 6
- Inlet: 1/4" BSP

PART CODE	BOX QTY.
ABS10010	1

Micro Die Grinder/ Pencil Drill

- Speed: 56,000rpm
- Av CFM: 3
- Inlet: 1/4" BSP
- Collet size: 3mm

PART CODE	BOX QTY.
MGR10000	1

Air Body Saw

- Strokes: 100pm
- Av CFM: 6
- Inlet: 1/4" BSP

PART CODE	BOX QTY.
ARC10000	1

Glass Polishing Wheel

- Felt wheel which is ideal for polishing out light scratches
- Can be used with a cordless drill

Use with Cerium Oxide see page 369

PART CODE	BOX QTY.
GPW10000	1

Air Sisal Machine

- Speed: 4,000rpm
- Av CFM: 4
- Inlet: 1/4" BSP
- Complete with sisal mop
- Used to polish plastic best results when used with a cream cleaner

PART CODE	BOX QTY.
ASM10000	1

Sisal Adaptor

- Converts a male mop to female M10 thread

PART CODE	BOX QTY.
ASM20003	1

Female Sisal Mop

- Used to polish plastic
- Use with sisal machine

It is recommended to use with a cream cleaner see page 397

PART CODE	BOX QTY.
ASM20000	1

Male Sisal Mop

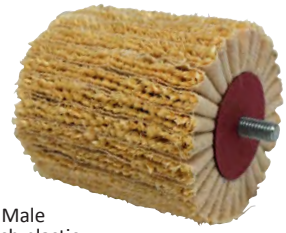

- Thread: M8 Male
- Used to polish plastic
- Use with sisal machine or a drill

It is recommended to use with a cream cleaner see page 397

PART CODE	BOX QTY.
ASM20001	1

Keyless Chuck

- Capacity: 10mm

PART CODE	BOX QTY.
CKK10001	1

Hand Router Shoes

DESCRIPTION	PART CODE	BOX QTY.
Seam Shoe	HRS10000	1
Drainage Shoe	HRS10001	1

1/4" Guarded Foot Pedal

Foot operated pedal with protective plastic toe guard to control and activate air power tools and small industrial machinery leaving both hands free to securely hold and position the project.

- ¼ inch port size
- Spring return pedal for short burst operation

PART CODE	BOX QTY.
GFP14100	1

Hydraulic Air Riveter

- Rivet Size: 3/32
- Av CFM: 2
- Inlet: 1/4" BSP

PART CODE	BOX QTY.
ART10000	1

Air Blow Gun

- Length: 140mm
- Inlet: 1/4" BSP

PART CODE	BOX QTY.
ABG10001	1

Dust Blow Gun

- Length: 10"
- Inlet: ¼" BSP
- Working pressure 150PSI
- Ergonomic handle for user comfort

PART CODE	BOX QTY.
ABG41000	10

Air Filter - Regulator and Lubricator

- Inlet: 1/4" BSP
- Working Pressure: 10 Bar
- Reservoir Capacity: 150mm

PART CODE	BOX QTY.
FLR10000	1

Y Piece Complete

- Consists of 2 quick release couplings and 1 adaptor

PART CODE	BOX QTY.
YPA10001	1

Air Fittings

- A: 3/8" BSP to tail
- B: 1/4" BSP Male adaptor
- C: 1/4" BSP Female adaptor
- D: 3/8" tail to adaptor
- E: 1/4" BSP Female coupling
- F: 1/4" BSP Male coupling *Euro couplings available on request
- G: 1/4" BSP Y Piece

A	B	C	D	E	F	G
APT10000A	APT10001C	APT10000C	APT10001A	APT10000E	APT10000F	YPA10000

Swivel Connector

- Inlets: 1/4" BSP

PART CODE	BOX QTY.
SWC10000	1

PTFE Tape

- Thread seal tape
- Size: 0.075mm x 12mm x 12m
- BS7786: 1995 Grade L potable water
- WRAS Approved

PART CODE	BOX QTY.
TAP10000	1

Inline Oiler

- Inlets: 1/4" BSP
- Drip feeds oil to air tools

Recommended for use on all air tools to prolong their life span.

PART CODE	BOX QTY.
OIL10000	1

Funnel and Spout

- Spout length: 140mm

PART CODE	BOX QTY.
FUN100140	1

Braided Air Hose - 30m

- Working pressure: 20 Bar
- Inlet: 1/4" BSP
- Heavy duty

PART CODE	BOX QTY.
AHC13830	1

Polyurethane Hose

- Available in 3, 4 or 8mm diameters
- 30 metres long

4mm x 30m	6mm x 30m	8mm x 30m	BOX QTY.
PFH10400	PFH10600	PFH10800	1

Recoil Air Hose

- Inlet: 1/4" BSP

7.6m/25ft	15m/50ft	BOX QTY.
AHC10025	AHC10050	1

Mixed box of Jubilee Clips

- Selection pack of zinc plated hose clips.
- Sizes: 10-16, 13-19, 18-25, 20-32 &, 25-38mm
- Ideal for automotive use and other applications securing hoses

MIXED BOX	9.5-12mm	BOX QTY.
JBC20000	JBC10000	1

One Touch Emergency Fittings Kit

- Convenient, compact boxes containing a selection of popular KELM push-in fittings along with handy tube cutter
- Available in 3 sizes: 6mm, 8mm & 10mm

6mm	8mm	10mm
PFE10006	PFE10008	PFE10010

TYPE	6mm KIT	8mm KIT	10mm KIT
Equal Connector	10	10	8
Equal Bulkhead	2	2	2
Equal Elbow	8	6	3
Equal Tee	10	8	2
Flow Controller (Unidirectional)	2	2	2
Flow Controller BSPT 1/4"	2	2	2
Flow Controller BSPT 1/8"	2	2	-
Flow Controller BSPT 3/8"	-	-	1
Male Stud BSPP 1/4"	10	10	8
Male Stud BSPP 1/8"	10	10	8
Male Stud BSPT 1/4"	10	10	7
Male Stud BSPT 1/8"	10	10	7
Male Stud BSPT 3/8"	-	5	5
Male Stud BSPT M5	5	-	-
Male Stud Elbow BSPP 1/4"	5	5	3
Male Stud Elbow BSPP 1/8"	8	6	3
Shut-Off Valve	2	2	-
Tube Cutter	1	1	1

Push Fit Male Stud

4mm	6mm	8mm
PFS10418M	PFS10618M	PFS10814M

Push Fit Female Stud

4mm	6mm	8mm
PFS10418F	PFS10618F	PFS10814F

Push Fit Male Stud Y

4mm	6mm	8mm
PFY10418M	PFY10618M	PFY10614M

Push Fit Male Stud Swivel Elbow

4mm	6mm	8mm
PFL10418M	PFL10618M	PFL10814M

Push Fit Female Swivel Elbow

4mm	6mm	8mm
PFL10418F	PFL10618F	PFL10814F

Push Fit Female Bulkhead Connector

4mm	6mm	8mm
PFB10418F	PFB10618F	PFB10814F

Push Fit Male Banjos

4mm	6mm	8mm
PBA10418M	PBA10618M	PBA10814M

Push Fit Female Banjos

4mm	6mm	8mm
PBA10418F	PBA10618F	PBA10814F

Push Fit Manual Flow Control Elbow

4mm	6mm	8mm
PLC10400	PLC10600	PLC10800

Push Fit Male Centre Leg T

4mm	6mm	8mm
PCT10418M	PCT10618M	PCT10818M

Push Fit Male Run Leg T

4mm	6mm	8mm
PRT10418M	PRT10618M	PRT10814M

Push Fit Union Joint

4mm	6mm	8mm
PFU10400	PFU10600	PFU10800

Probe Thermocouple with Spring Cap

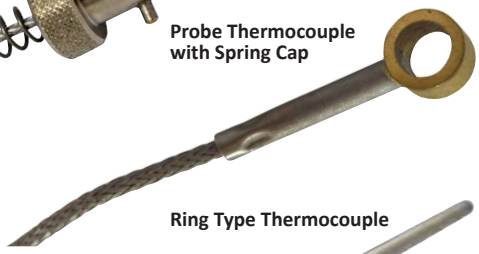

Ring Type Thermocouple

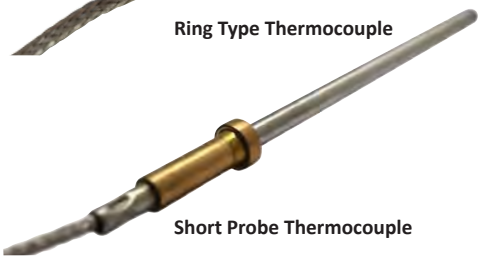

Short Probe Thermocouple

Thermocouples Heating Sensors for PVCu Welding Machines

Designed to work with the Urban or Kombimatec uPVC welders. The cap has a male bayonet. The coupling probes connect to heat for the welding of windows.

- 1.5m
- Suits Urban & Kombimatec

PROBE withSPRING CAP
THC10000

The ring type themocouple ring is ideal for use on Someco, Wegoma or STB PVCu welders.

300mm	1000mm	2000mm
THC21001	THC21000	THC22000

Designed to work with the Elumated/Sturtz branded machinery. The coupling probes connect to heat for the welding of windows

- 1.5m

SHORT PROBE
THC10000

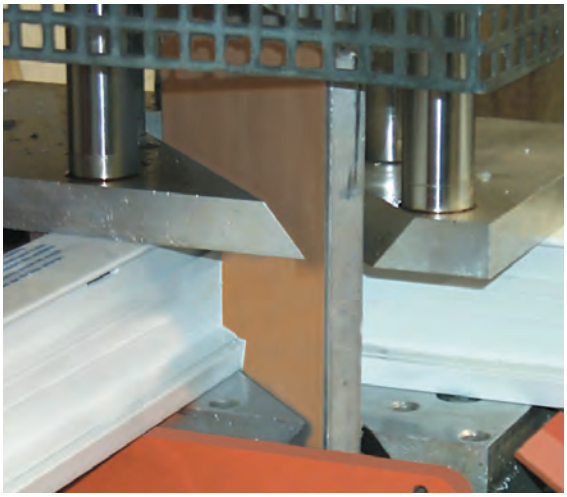

Teflon ET 22553 PTFE Coated Glass Tape For PVCu Weld Heads

- Self–adhesive
- Easy to apply
- Burn–resistant
- Does not stick to weld material
- Available in 1m multiples
- Special rates available for a 30 metre roll

Application Information
It is recommended that the weld head be cleaned before applying a new sheet of Teflon. Weld heads can be cleaned with Stelmax Thinners Caution! Only change Teflon when weld head is cold.

Technical Specification
ET 22553 is manufactured from a 0.152mm standard grade PTFE impregnated fibreglass with 0.05mm of high temperature silicone pressure sensitive adhesive. This product is almost chemically inert. Only molten alkali metals and fluorine under elevated temperatures and pressure will attack the PTFE surface. The fibreglass provides dimensional stability and restricts PTFE cold flow. The PTFE surface provides a quick-release surface ideal for PVCu weld heads.

Physical Properties (Physical properties are typical values and should not be used for writing specifications)

Adhesion	(oz/in. width)	45
Break strength	(lbs/in. width)	120
Elongation	(%)	<5
Backing thickness	(mm)	0.152
Adhesive thickness	(mm)	0.05
Temperature range	(degrees C)	-75 to +260
Insulation class	(degrees C)	180

FINISH	TYPE	PART CODE	BOX QTY.
Brown	Premium Self Adhesive	TEF10000	1m²
Brown	Non Adhesive	TEF20000	1m²
Green	Non Adhesive	TEF20001	1m²
Green	Self Adhesive	TEF10001	1m²
Red	Self Adhesive	TEF10003	1m²
Silver	Self Adhesive	TEF10002	1m²

Teflon ET 22553 PTFE Sleeve

Available as a Rotox sleeve in brown.

- Size 225 x 430mm

PART CODE	BOX QTY.
TEF50000	1

HSS Saw Blades

- Saw blades for cutting steel
- Millennium blades are recommended for bead saws

SIZES (mm)			CUTTING EDGE	PART CODE
BLADE Ø	CUT THICKNESS	SPINDLE Ø		
103	2	32	Z60 RH	SBHS1033260R
103	2	32	Z60 LH	SBH10332060L
200	1.8	32	Z200	SBH20032200
225	1.8	32	Z200	SBH22532200
250	2	32	Z128	SBH25032128
250	2	32	Z180	SBH25032180
250	2	32	Z200 Millenium	SBHM25032200

TCT Saw Blades

- Saw blades for cutting plastic and aluminium
- 5° Negative

SIZES (mm)		CUTTING EDGE	PART CODE
BLADE Ø	SPINDLE Ø		
250	32	Z80	SBT25032080
250	32	Z126	SBT25032126
300	32	Z96	SBT30032096
330	32	Z108	SBT33032108
350	32	Z108	SBT35032108
400	32	Z96	SBT40032096
420	32	Z96	SBT42032096
450	32	Z108	SBT45032108
500	32	Z120	SBT50032120

Saw Blade Reducer

- Reduces saw blade bore to required size

32-30mm
SBS3230

Xpert Saw Blade Wax

- Used to lubricate saw blades for an easier cut

PART CODE
SBW10000

A= Width of Centre
B= Depth of Centre
C= Width of Blade
D= Depth of Blade

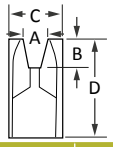

Groove Knives

	FITS	WIDTH OF CENTRE	DEPTH OF CENTRE	WIDTH OF BLADE	DEPTH OF BLADE
	Actual	2.5	0.3	24	18
		2.5	0.5	24	20
		3.0	0.5	24	20
	Elumatec EV343 KNF10343 OLD KNF10343N NEW	3.0	0.6	19	46
	Elumatec	3.5	0.6	19	40
	EPA275	3.0	0.6	24	30
	EPA 376	3.5	0.6	24	41
	GlÖckner	3.5	0.7	20	20
	Jade	5.0	0.1	19	35
	Kombimatec	3.0	0.7	19	43
	MLA KNF12306	3.0	0.6	16	43
	Rotox	3.0	0.6	24	30
	Rotox 17	3.5	0.6	24	41
	Rotox 37	2.5	0.5	24	18
		3.0	0.5	24	15
	Rotox 37	3.0	0.7	24	15
	Rotox 375 / 379	3.0	0.6	24	25
	Someco	3.0	0.3	20	40

	FITS	WIDTH OF CENTRE	DEPTH OF CENTRE	WIDTH OF BLADE	DEPTH OF BLADE
	Someco	3.0	0.3	20	61
	StÜrtz	3.0	0.5	20	25
	StÜrtz	3.0	0.7	25	25
	StÜrtz	3.5	0.6	19	40
	Urban KNF310356L KNF310356R	3.5	0.6	19	35
	Urban SV400	3.0	0.6	16	80
	Urban SV480	3.0	0.5	19	35
	Urban SV480	3.0	0.5	19	35
	V-Tecnic	3.0	0.5	19	50
	V-Tecnic	3.0	0.6	16	43
	Wegoma	2.8	0.3	19	38
		3.0	0.3	19	40
	Zierke 7402	3.0	0.5	19	40

Other groove knive types and sizes are avilable please enquire with our sales office for details.

Xpert Carbide Burrs

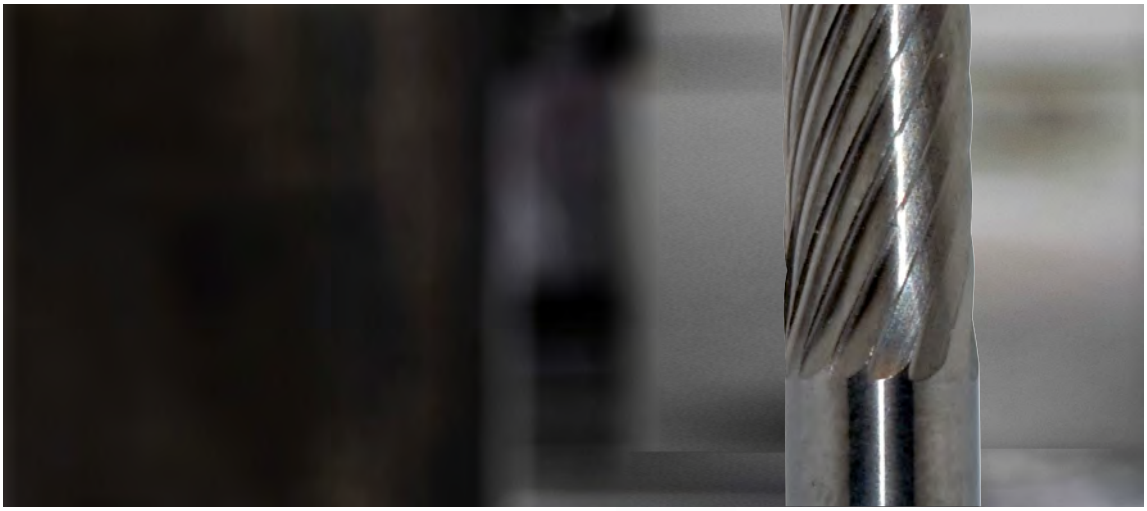

- Various types; 28, 38, 50 or 75mm long
- Works with micro grinders/pencil or dentist drills
- Med-high quality or High Quality

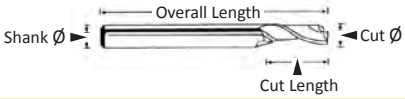

	QUALITY	TYPE	CUT Ø (mm)	CUT LENGTH (mm)	OVERALL LENGTH (mm)	SHANK Ø (mm)	PART CODE
A	Medium-High	Ball Nose Cylinder	3	14	38	3	BUR10000
B	Medium-High	Ball Nose Tree	3	12	38	3	BUR10001
C	Medium-High	Pointed	3	12	38	3	BUR10002
D	Medium-High	Straight End	3	14	28	3	BUR10003
E	Medium-High	Straight with End Cut	3	14	38	3	BUR10004
F	Medium-High	Bull End	3	2.8	38	3	BUR10007
G	High	Straight Cylinder no End Cut	6	16	50	6	BUR10005
H	High	Ball Nose Cylinder (double) (Cutting head on both ends)	3	14	75	3	BUR10006
J	High	Ball Nose Cylinder	3	14	38	3	BUR20000

Cutters & Router Bits

ROT143050 ROT82648 ROT42352

Rotox Cutters

- High speed steel
- Professionally machined
- Used on hand routers
- Cutter is fixed to machine via an M10 female thread

TYPE	CUT Ø (mm)	CUT LENGTH (mm)	OVERALL LENGTH (mm)	SHANK Ø (mm)	PART CODE
Rotox Cutter	4	23	52	M10 Female Thread	ROT42352
Rotox Cutter	5	23	52	M10 Female Thread	ROT52352
Rotox Cutter	6	23	52	M10 Female Thread	ROT62352
Rotox Cutter	8	26	52	M10 Female Thread	ROT82652
Rotox Cutter	12	23	52	M10 Female Thread	ROT122352
Rotox Cutter	16	32	50	M10 Female Thread	ROT163250

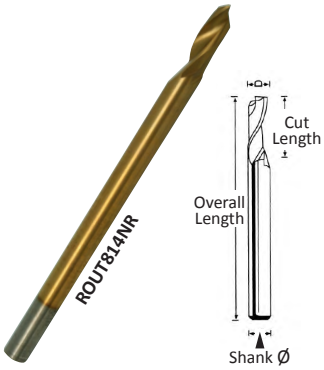

Copy Router Bits

- HSS steel
- Professionally machined
- Used in copy routers for lock holes
- Twin flute straights available

TYPE	CUT Ø (mm)	CUT LENGTH (mm)	OVERALL LENGTH (mm)	SHANK Ø (mm)	PART CODE
Copy Router Bit	4	12	60	8	ROUT412608
Copy Router Bit	4	40	100	8	ROUT440NR
Copy Router Bit	5	12	60	8	ROUT51260/80R
Copy Router Bit	5	14	10	8	ROUT514NR
Copy Router Bit	5	35	80	8	ROUT535NR
Copy Router Bit	5	40	100	8	ROUT540100
Copy Router Bit	5	40 Twin Flute Spirall	100	8	ROUT540NR
Copy Router Bit	6	40	100	8	ROUT640NR
Copy Router Bit	8	14	80	8	ROUT814NR
Copy Router Bit	8	14	120	8	ROUT814120NR
Copy Router Bit	8	30	100	8	ROUT830NR
Copy Router Bit	8	40	120	8	ROUT840120NR
Copy Router Bit	10	40	100	8	ROUT1040NR
Copy Router Bit	12	14	80	8	ROUT1214NR

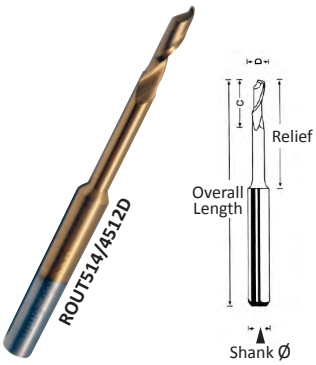

Drain Router Bits

- HSS steel
- Professionally machined
- Used in copy routers for drainage slots

TYPE	CUT Ø (mm)	CUT LENGTH (mm)	RELIEF (mm)	OVERALL LENGTH (mm)	SHANK Ø (mm)	PART CODE
Drain Router Bit	4	16	45	90	8	ROUT416D
Drain Router Bit	5	18	35	80	8	ROUT518D
Drain Router Bit	5	16	45	90	8	ROUT516D
Drain Router Bit	6	45	45	90	8	ROUT616D
Drain Router Bit	8	14	68	100	8	ROUT814/68D
Drain Router Bit	5	14	45	120	8	ROUT514/4512D

Xpert Triple Drills

- Set of 3 drill bits (2 x 10mm & 1 x 12mm)
- 8mm plain shank with a flat side for grub screw fixing

SIZE	PART CODE
2 x 10 & 1 x12mm	TDS10001

Xpert Triple Drills

- HSS drill bits
- M10 male thread
- Used on copy router for handle holes

SIZE	LEFT HAND SPIRAL	RIGHT HAND SPIRAL
10mm	TDS10003	TDS10000
12mm	TDS10005	TDS10004
10mm Pilot	TDS10007	TDS10006
12mm Pilot	TDS10009	TDS10008

Xpert Kip Locks

- ABS plastic
- Male or female thread

SIZE	PART CODE
M5 x 50	KLH100550
M6 x 63	KLH100663
M8 x 63	KLH100863
M10 x 63	KLH101063
M12 x 63	KLH101263

SIZE	PART CODE
M6 Female	KLH1006F
M8 Female	KLH1008F
M10 Female	KLH10010F
M12 Female	KLH1012F

Xpert Clamp Pads

- Non marking pads
- Screw on to end of clamp cylinder
- Available in: M8 male thread or M10 female thread

SIZE	PART CODE
M8 Female	CMP10000
M8 Male	CMP20000
M10 Female	CMP10001

Seal the world...

rexon

CE Certified

Highly-rated silicones and adhesives
Big choice of RAL colours.

Available from

WINDOW WARE

We've got it

Stelmax Filler 1961

This Stelmax Gap Filler is suitable for sealing and joining PVC and uPVC to itself and substrates such as brick work.

- Rapidly develops a protective skin to prevent unwanted debris setting within the sealant
- When set fully it is a water-resistant and colourfast seal

COLOUR	SIZE	PART CODE	BOX QTY.
White	300gm	STX19610	20
Brown	300gm	STX19612	20

Stelmax Filler 1965

1965 Filler for sealing and joining PVC and PVCu to itself and most porous substrates such as brickwork and timber. The product will skin rapidly to prevent penetration by foreign bodies of the product surface and when fully cured will give a water-resistant colour-fast seal.

COLOUR	SIZE	PART CODE	BOX QTY.
White	135gm	STX21011	16
Cream RAL9001	135gm	STX21014	16
Clear	135gm	STX21013	25
Oak	135gm	STX21018	25
Brown	135gm	STX21012	25

Stelmax Adhesives 1985

- Stelmax Adhesive 1985 is a resin and solvent based adhesive product that can be easily applied to create maintenance free bonds
- It can be used to bond plasticised and rigid PVCu and ABS

COLOUR	SIZE	PART CODE	BOX QTY.
White	135gm	GLU30000	16
Clear	135gm	GLU30001	16

Stelmax Thinners

Available in 500ml and 5 litre tins, this Stelmax solvent cleaner and thinner is fantastic at removing even stubborn dirt and marks from PVCu windows at the end of manufacture as well as after installation. Use in a well-ventilated area. Apply sparingly using a damp cloth and wipe the area clean with quick, smooth strokes – do not rub or risk prolonged contact with the plastic as this may damage the surface. Replace cap after each use.

- Solvent cleaner for PVC and PVC-coated products
- Tough on stubborn dirt, stains and marks
- Highly flammable

SIZE	PART CODE	BOX QTY.
1/2 litre	STX20001	20
5 litres	STX22221	4

For full information about how to handle and use this product safely, please refer to the safety datasheet.

Pinkgrip

- Pinkgrip can be used inside and outside, and adheres to just about every building substrate
- Amazing grab strength not only removes the need to pin under the workpiece to prevent slumping, but also eliminates the need for double stick methods

COLOUR	SIZE	PART CODE	BOX QTY.
Pink	350ml	PGP10000	12

Instant Nails

- Instant Nails is a high strength, solvent-free gap-filling multi-use adhesive that provides a ''quick grab'' and replaces mechanical fixings in many home improvement applications
- Dries white and may be overpainted if required

COLOUR	SIZE	PART CODE	BOX QTY.
White	350ml	GPF10000	12

Silicone Remover

- Terpene-based; easy to use liquid gel for the removal of cured silicones and MS® Polymers
- Easy application by brush. Non-sagging
- Removes all types of cured silicone and MS® Polymer based sealants from all sorts of substrates

PART CODE	BOX QTY.
SIL60001	12

Superglue

- Fast bonding of non-porous surfaces, such as rubber, metals, plastic, glass etc.
- Adhesion can be accelerated using Xpert Superglue Activator
- Super fast adhesion
- High bond strength
- High viscosity
- Works on most porous materials

VISCOCITY	20g	50g	BOX QTY.
Low	GLU20202B	-	25
Medium	GLU20201B	GLU20501B	25
High	GLU20203	GLU20503	25

Superglue Activator

- Solvent-based aerosol spray activator
- Works with Xpert superglue to speed up adhesion
- Non-yellowing
- Reduces bloom and odour

SIZE	PART CODE	BOX QTY.
200ml	GLU72204	12

reXon 117 LMN Silicone

This low modulus neutral oxime curing multi-purpose silicone sticks firmly without primer to most surfaces including PVC, treated wood, aluminium, steel and glass*, making it ideal for sealing joints in construction and engineering applications. With the use of a primer, reXon 117 can also be used with confidence on alkali surfaces such as concrete and brick.

*reXon 117 silicone is not recommended for use on insulated glass (can affect the butyl sealing) or security glass (can affect the PVB film).

- For use outdoors and indoors in well-ventilation rooms
- High resistance to ageing, UV, weather conditions, low and high temperatures
- Not suitable for applications in continuous contact with water
- Permanent elasticity
- Neutral oxime curing system
- Application temperature: between 5°C & 40°C (do not apply when there is a risk of rain or frost)
- Skin forming time: 25-30 minutes at 23°C and 50% relative humidity
- Hardening rate: 2.5mm in 24 hours at 23°C and 50% relative humidity

COLOUR	RAL	SIZE	PART CODE	BOX QTY.
White		280ml	SIL20000	12
Clear	-	280ml	SIL20006	12
Brown	RAL8017	280ml	SIL20002	12
Black	RAL9005	280ml	SIL20005	12
Grey	RAL7016	280ml	SIL20007	12

Silirub LMN Low Modulus Neutral Cure

- An excellent quality neutral cure silicone sealant which remains permanently elastic
- Permanent colour
- UV resistant
- Very good adhesion on many materials
- Low modulus

COLOUR	RAL	SIZE	PART CODE	BOX QTY.
White		300ml	SIL41000	24
Brown	RAL8028	300ml	SIL41002	24
Chartwell Green	RAL6021	300ml	SIL41004	24
Black		300ml	SIL41005	24
Clear	-	300ml	SIL41006	24
Oak	RAL1011	300ml	SIL41008	24

Silirub N Neutral Cure

- Low modulus silicone sealant which remains permanantly elastic
- Permanent colour
- UV resistant
- Very good adhesion on many materials

COLOUR	RAL	SIZE	PART CODE	BOX QTY.
White		300ml	SIL40000	24
Brown	RAL8028	300ml	SIL40002	24
Clear	-	300ml	SIL40006	24
Teak	RAL8002	300ml	SIL40007	24

reXon 111
Hi-grade Silicone

This high-quality neutral silicone stays elastic and water resistant, and achieves universal adhesion* without primer on metals, wood, stone and masonry, as well as synthetic materials such as plastic (PVC, polycarbonate and plexi). That makes it ideal for sealing joints and junctions in a multitude of construction projects in buildings, cars, boats and caravans.

*reXon 111 silicone does not stick to bitumen, polyethylene, PTFE or polypropylene.

- Easy to apply indoors and outdoors
- Water resistant
- Neutral, odourless and acid-free
- Excellent adhesion without primer
- Cannot be painted
- Permanent elasticity
- Retains original colour and is UV and weather resistant
- Withstands temperatures from -50°C to 150°C
- Meets ISO 11600 F in G2
- Application temperature: between 5°C & 40°C (do not apply when there is a risk of rain or frost)
- Skin forming time: 25 minutes (colours) or 10 minutes (clear) at 23°C and 50% relative humidity
- Hardening rate: 3mm in 24 hours at 23°C and 50% relative humidity

COLOUR	RAL	SIZE	PART CODE	BOX QTY.
White	RAL9003	310ml	SIL21000	12
Clear	-	310ml	SIL21006	12
Cream	RAL9001	310ml	SIL22003	25
Cream (Eurocell/Liniar)	RAL1015	310ml	SIL221015	25
Tauare Irish Oak	RAL1020	310ml	SIL22012	25
Brown	RAL8017	310ml	SIL21002	12
Chartwell Green	RAL6021	310ml	SIL226021	25
Agate Grey	RAL7038	310ml	SIL22008	25
Signal Grey	RAL7004	310ml	SIL227004	25
Basalt Grey	RAL7012	310ml	SIL227012	25
Slate Grey	RAL7015	310ml	SIL227015	25

Silirub 2 Low Modulus Neutral Cure

- A high quality neutral, elastic one-component joint sealant based on silicones
- Permanent colour
- UV-resistant
- Very good adhesion on many materials
- Excellent acoustic properties

COLOUR	RAL	SIZE	PART CODE	BOX QTY.
Brilliant White	RAL9016	300ml	SIL42000	24
Cream	RAL9001	300ml	SIL42003	15
Stone Cream	RAL1015	310ml	SIL42003S	15
Grey	RAL7015	300ml	SIL42001	24
Anthracite Grey	RAL7016	300ml	SIL42007	24
Brown	RAL8028	300ml	SIL42002	24
Clear	-	300ml	SIL42006	24
Irish Oak	RAL1011	300ml	SIL42008	15

Parasilico FR Fire Retardant Silicone Sealant

- Fire resistant to British Standard BS 476: Part 20: 1987 & PREN 1366-3: 1998
- FDA-approved for use in the food industry
- Permanent elasticity
- Excellent adhesion on most building materials
- Apply with a standard applicator gun in temperatures between 5ºC & 40ºC
- High resistance to ageing, weather, UV and temperatures from -40ºC to 100ºC
- Skin formed after 3 hours at 23ºC and 50% relative air humidity
- Vulcanisation: 1-2mm in 24 hours at 23ºC and 50% relative air humidity

WHITE	SIZE	BOX QTY.
SIL26000	310ml	12

reXon 114 Sanitary Silicone

Oderless

This high-quality neutral silicone sealant forms a flexible, water-resistant seal and is specifically designed for use in areas of high moisture such as baths, sinks and showers. It is neutral and odourless, mould resistant with a smooth consistency that's easy work and apply. ReXon 114 sanitary sealant can be used on acrylic, sensitive metals (eg stainless steel, aluminum), ceramic tiles, plastic, glass and all other materials commonly found in wet rooms and bathrooms.

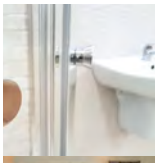

- Water resistant
- Anti-mould
- Resistant to UV, chlorine and temperatures from -50°C to + 150°C
- Very easy to work and smooth
- Does not stick to hands or form threads
- Permanent elasticity
- Acid free
- Excellent adhesion without primer
- Application temperature: between 5°C & 40°C
- Drying time: Film formed after 6 minutes at 23°C and 50% relative humidity
- Hardening: 2.5mm in 24 hours at 23°C and 50% relative humidity

COLOUR	SIZE	PART CODE	BOX QTY.
White	310ml	SIL23000	12

reXon 121 Acrylic

12.5%
Expansion Rate

If you need to fill cracks and gaps in walls, plaster board and brick work, around door- and window frames and window sills, then reXon 121 acrylic silicone is the right product for the job. This high-quality caulk is very easy to work with and smooth to give a superior finish that can be painted once dry. It can be used indoors and outdoors but should not be used in areas that are constantly wet. 121 acrylic adheres to brick, concrete (cellular), masonry, plaster, wood, ceramic tile, metals and rigid PVCu.

- Can be painted perfectly
- Easy to work
- Excellent adhesion without primer
- Remains watertight after polymerisation complete
- Suitable for use indoors only
- Elastoplastic permanently (max 12.5% elasticity)
- Does not contain phthalates
- Application temperature: between 5°C & 40°C
- Drying time: Film formed after 70 minutes
- Completely dry after approx. 7 days

COLOUR	SIZE	PART CODE	BOX QTY.
White	310ml	SIL24000	12

Silirub® A

- Low modulus acetoxy silicone
- Very fast skinning and curing
- Contains a powerful fungicidal agent
- Primerless adhesion on many common construction materials (glass, ceramic, porcelain, metals and wood)
- Resistant to UV, rain, snow and ozone, plus many chemicals
- High and low temperature resistant

COLOUR	SIZE	PART CODE	BOX QTY.
White	300ml	SIL57000	24
Clear	300ml	SIL57006	24

Decorators Caulk

7.5%
Expansion Rate

- Acrylic polymer based sealant and filler
- Solvent free and virtually odourless
- Very easy to apply
- Colourfast and waterpoof after curing
- Can be painted after curing
- Very good adhesion on many porous surfaces
- For sealing of window sills, skirting boards, architraves, plasterboard, brickwork, etc
- Can be used for filling small cracks in plaster

COLOUR	SIZE	PART CODE	BOX QTY.
White	300ml	SIL59001	25

reXon 284 Adhesive

This high-quality white building mastic uses hybrid polymers to achieve flexible and durable adhesion of almost all building materials including stone, wood, PVC, aluminium, metal, concrete and more. Please note, reXon 284 adhesive will not stick to PA, PE, PP, Teflon® and bitumen.

- Elastic-bonding
- Air- water- and dust-tight
- Can be used in- and outdoors. Apply in temperature between 5°C & 40°C
- UV and weather resistant
- Can be painted with most water and solvent based paints.
- Film formed after approx. 30 min at 20°C and 65% relative air humidity
- Touch dry after 2 hours
- Hardening: 2.5mm in 24 hours at 20°C and 65% relative humidity
- Contains no solvents, isocyanates or phthalates
- 290ml tube

COLOUR	SIZE	PART CODE	BOX QTY.
White	290ml	TGLU20000	12

reXon 282 Adhesive

There's virtually no limit to the different materials reXon 282 multipurpose adhesive will stick to! This translucent MS polymer mastic forms a completely clear permanent bond between a huge range of smooth or porous surfaces, including traditional building substrates such as brick, plaster, stone, marble, granite, concrete and metal, as well as synthetic materials including polystyrene, polyurethane, chipboard and polycarbonate.

- Translucent - virtually invisable when gluing together layers of glass or acrylic
- Easy to apply
- Adheres to wet surfaces
- Good weather and UV resistance although there may be a small colour change over time
- Solvent free and virtually odourless
- Apply in temperature between 5°C & 40°C
- Film formed after approx. 25 min at 20°C and 65% relative air humidity
- Touch dry after approximately 2 hours
- Fast hardening: 2-3 mm in 24 hours at 20°C and 65% relative humidity
- Maximum adhesion obtained after 3 weeks
- Can be painted immediately with most water and solvent based paints.

COLOUR	SIZE	PART CODE	BOX QTY.
Clear	290ml	TGLU20006	12

Fix ALL® High Tack

- Fix ALL® High Tack is a high quality, single component joint sealant with high adhesive strength. It is based on MS-Polymers®
- High initial tack reducing the need for initial support
- Fast curing, quick build-up of end strength, high sheer strength after full cure (no primer)
- Easy to apply and easy to tool and finish
- Remains elastic after curing
- No odour
- Does not contain isocyanates, silicones or solvents
- Paintable with all water based paints
- Good colour stability, weather and UV resistance
- Can be applied on wet surfaces, even under water

COLOUR	SIZE	PART CODE	BOX QTY.
White	290ml	TGLU40290HT	12

Fix ALL® Crystal

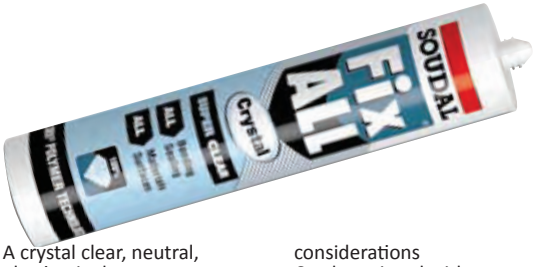

- A crystal clear, neutral, elastic, single component sealant/adhesive based on MS-Polymers®
- Completely transparent
- High performance mechanical properties
- Good extrudability even at low temperatures
- Ecological advantages – free of isocyanates, solvents, halogens and acids
- Minimal health and safety considerations
- Can be painted with water-based paints and a number of other systems preliminary test required)
- Permanently elastic after full cure
- Invisible bonding of glass and other transparent materials

COLOUR	SIZE	PART CODE	BOX QTY.
Crystal	290ml	TGLU46290	12

Soudalead PB

- Low modulus, neutral cure silicone sealant and filler for use on lead and other metals
- Very easy to apply (no mixing) with primerless adhesion
- Permanent colour
- UV resistant
- Stays elastic after curing
- Compatible with all lead types
- Virtually odourless

COLOUR	SIZE	PART CODE	BOX QTY.
Grey	300ml	SIL31000	25

Self Cleaning Glass Sealant SMX506

- Specifically developed for use with self-cleaning glass between glass and window frames in residential installations
- Can be applied on to glass without primer and is completely silicone free
- Leaves self-cleaning function completely unaffected

COLOUR	SIZE	PART CODE	BOX QTY.
White	290ml	SIL43000	12
Black	290ml	SIL43005	12

Aquafix - All Weather Sealant

- A solvent-based plasto-elastic sealant that adheres to most surfaces even when damp or under water
- Ideal as en emergency repair product or as a general-purpose sealant where the job must be done even in the rain
- Totally transparent
- Easy to apply and tool
- Good slump resistance

COLOUR	SIZE	PART CODE	BOX QTY.
Clear	310ml	SIL57106	15

T-Rex

- Fibre reinforced
- Excellent initial grab (at least 125kg/m², full surface bonding) for fast, powerful and direct bonding
- Direct application onto one substrate
- Replaces nails and screws
- Suitable for bonding on uneven surfaces
- Excellent adhesion on a wide range of construction materials both in interior and exterior applications

COLOUR	SIZE	PART CODE	BOX QTY.
Beige/Brown	310ml	TRX10000	12

Heavy Duty Dripless Mastic Gun

With its dripless trigger action the Xpert heavy duty mastic gun is a must-have purchase for every professional.

- Special trigger prevents material from being released after the last compression
- Cuts down on waste
- Saves mess
- Revolving
- Will hold up to a 400ml tube

CARTRIDGE SIZE	PART CODE	BOX QTY.
Up to 400ml	SIL99990	1

Cox Skeleton Gun

- Made in the UK from high quality steel
- Takes up to 400ml cartridges
- Powerful trigger action, case hardened clutch plate, patented pressure relief device
- Welded steel, epoxy-coated frame. Zinc coated
- Ideal for both the professional and the DIY enthusiast

CARTRIDGE SIZE	PART CODE	BOX QTY.
Up to 400ml	SIL99998	1

Heavy Duty Revolving Caulk Gun

- Trade quality
- Barrel rotates to allow for smooth application of fillers and caulk
- Takes up to 400ml cartridges

CARTRIDGE SIZE	PART CODE	BOX QTY.
Up to 400ml	SIL99995	1

Xpert Professional PU Applicator Gun

- Stainless steel nozzle
- Full teflon-coated basket and internal parts
- Length: 200mm

USE | CLEAN | REPEAT !
To keep your foam gun in good working order clean regularly

PART CODE	BOX QTY.
GUN10000	1

Lacquer Spray

- Touch dry in 30 seconds
- No base coat or top coat required
- UV stable
- Weather resistant - suitable for internal and external use
- Suitable for use on plastic & powder coated metal products
- For best results spray 10cm away from the object

COLOUR	PVCu RAL MATCH	PART CODE	BOX QTY.
Anthracite Grey	RAL7016	SPR20001	12
Black	RAL9005	SPR20005	12
Dark / Black Brown	RAL8022	SPR20002	12
Steel Blue	RAL5011	SPR20022	12
Chartwell Green	RAL6021	SPR20014	12
Cream (137905)	RAL9001	SPR20003	12
Dark Green	RAL6009	SPR20023	12
Irish Oak	RAL1020	SPR20012	12
Slate Grey	RAL7015	SPR20015	12
White / Traffic White	RAL9016	SPR20000	12

Note: for Aluminium, please specify the finish; matt, silk, or gloss.

Greenwood Slotvent and Window Ware Sash Secure originally in White, now sprayed in Konig Chartwell Green Spray Lacquer.

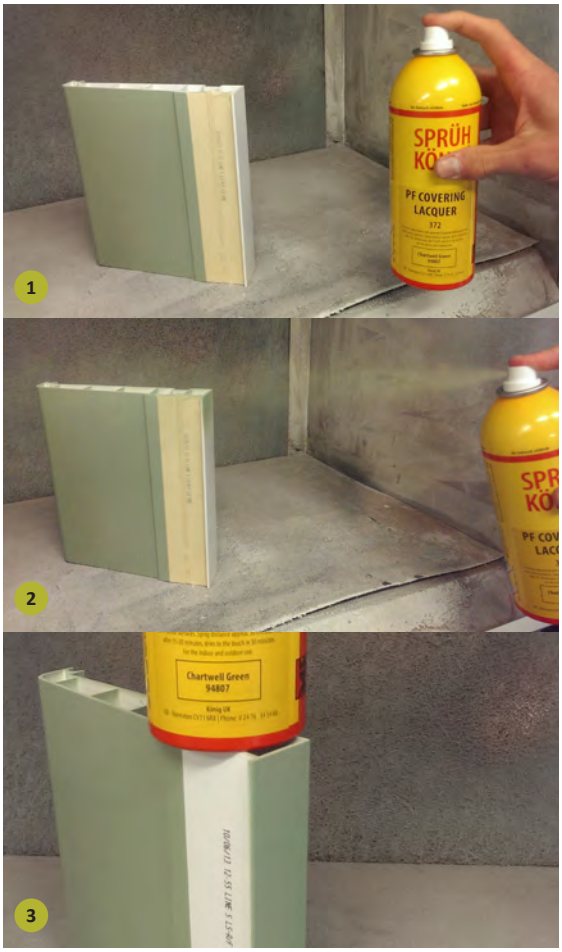

PVCu Repair Kits

PART CODE	BOX QTY.
KRK61400	1

- Suitable for repairing minor scratches and dents on PVCu windows and doors
- Contains fillers for repairing mahogany, rosewood and oak foiled profiles
- A white filler is also included
- Kit includes fillers, heating iron, planer and abrasives

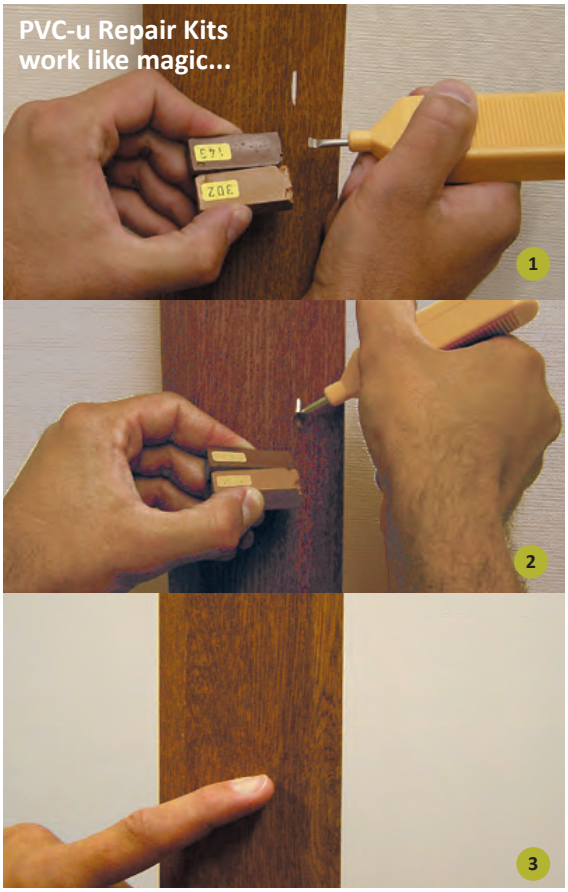

Colour Edging Pens

- Unique press action
- Available in a selection of colours
- Ideal to touch-up scratched surfaces

SPARE NIBS	PACK OF
PEN10010	10

COLOUR	PVCu RAL MATCH	PART CODE	BOX QTY.
Agate Grey	RAL7038	PEN10016	10
Anthracite Grey	RAL7016	PEN10001	10
Basalt Grey	RAL7012	PEN10020	10
Black	RAL9005	PEN10005	10
Dark / Black Brown	RAL8022	PEN10002	10
Steel Blue	RAL5011	PEN10004	10
Chartwell Green	RAL6021	PEN10014	10
Cherry / Light Oak	RAL8001	PEN10008	10
Cream (137905)	RAL9001	PEN10003	10
Green	RAL6005	PEN10018	10
Dark Green	RAL6009	PEN10011	10
Hazy Grey	RAL7001	PEN10019	10
Irish Oak	RAL1020	PEN10012	10
Light Grey	RAL7035	PEN10021	10
Mahogany	RAL8002	PEN10009	10
Red 97306	RAL3011	PEN10006	10
Rosewood	RAL8015	PEN10007	10
Sienna	RAL8024	PEN10013	10
Slate Grey	RAL7015	PEN10015	10
White / Traffic White	RAL9016	PEN1000A	10
White	RAL9010	PEN10000	10
Wine Red	RAL3005	PEN10017	10

Note: for Aluminium, please specify the finish; matt, silk, or gloss.

reXon 311 Handheld PU Foam

This high-performance polyurethane foam provides a quick and easy way to seal and insulate joints and cracks against heat loss, drafts and noise. ReXon 311 foam will adhere to many common building materials, such as wood, concrete, stone, masonry, plaster, metal, glass, polyester, polystyrene foam and PVC. Please note, this product does not stick to polyethylene film, silicone or PTFE.

- Suitable for use indoors and outdoors (protect against atmospheric influences)
- Good resistance to chemicals, aging and temperatures from -40°C to 90°C
- Good sealing capacity
- Should be applied in temperatures between 5°C and 30°C
- High volume production – gives 35-40 litres
- Minimum counter-blow (low expansion)
- Ozone-friendly - free of CFK and HCFK
- Hardens under the influence of the humidity in the air
- Touch dry after 16 minutes
- Hard enough to cut, saw, sand and paint after 40 minutes
- Excellent adhesion to many surfaces

SIZE	PART CODE	BOX QTY.
750ml	FIF20001	12

Soudafoam® Comfort B3 Hand Held Foam Simply Genius!

Perfect use with one hand

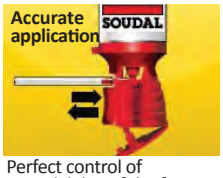

Perfect control of extrudability of the foam

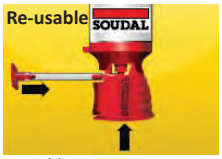

Possible to re-use up to 6 weeks after first use

- Regular users of hand held PU foam are often frustrated by inconvenient two-handed operation, difficulty of application and a limited shelf life after first use
- The GENIUS GUN® is different! This specially designed patented trigger mechanism ensures precise dosage and removes the need for an additional gun. Simply Genius!
- Soudafoam Comfort B3 Genius Gun is a one component, polyurethane expanding foam
- Excellent form stability; no shrink; no post expansion
- Excellent filling characteristics
- Excellent adhesion to all building materials (except PE, PP and PTFE)
- High insulation values, both thermal and acoustical

SIZE	PART CODE	BOX QTY.
600ml	FIF50800	12

reXon 341 Gun Grade Foam

This fast-curing thermal and acoustic insulating polyurethane foam can be used indoors and outdoors to fill holes, cracks and cavities in walls, ceilings and roofs, as well as to insulate pipes, tubes and electrical conduits. It will adhere to most building materials such as wood, concrete, stone, masonry, plaster, metal, glass and many synthetic materials such as polyester, polystyrene and PVC. Please note, reXon 341 will not stick to polyethylene sheets, silicones or PTFE.

- Should be applied with a standard NBS gun in temperatures between 5°C and 30°C
- Suitable for use indoors and outdoors (protect against atmospheric influences)
- Good resistance to chemicals, aging and temperatures from -40°C to 90°C
- Safety valve ensures no moisture intrusion
- High yield: 50-55 litres
- Minimal counter-blow: low expansion
- Ozone-friendly - free of CFK and HCFK
- Can be painted
- Excellent adhesion to many surfaces
- Good closing power
- Hardens under the influence of the humidity of the air
- Touch dry in 10-14 minutes. Hard enough to cut in 30-40 minutes

SIZE	341	BOX QTY.
750ml	FIF20000	12

reXon 342 Fire Resistant Gun Grade Foam

This fire-resistant single-component expanding PU gun foam from reXon is ideal for sealing, insulating and filling bigger joints and cracks in fire-rated walls, ceilings or between the frames of fire-proof windows and doors. This foam has excellent adhesion, sticking to most common building materials including concreate, timber, stone, masonry, plaster and metal, as well as plastic, polystyrene, PU-foam and PVC etc.

- Foam is fire resistance rated to EN 1366-4 and will stop fire for up to 4 hours
- Ozone-friendly: CFC and HCFC free
- Foam can be cut and painted after less than 30 minutes curing time
- Achieves precise application with a standard NBS gun
- Safety valve shuts out moisture to ensure foam can't cure in the can
- Good filling capacity yields 40-45 litres from a 750ml can
- Recommended application in temperatures from +5°C - +30°C (Optimal at 20°C)
- Suitable for indoor and outdoor use – cured foam resists temperatures from -50°C - +90°C
- Foam relies on the moisture in the air (humidity) to cure
- Excellent adhesion to most surfaces

SIZE	342 FR	BOX QTY.
750ml	FIF20701	12

Soudafoam® Fire Rated Gun Grade Foam

- One-component, ready-to-use, self-expanding polyurethane foam
- Fire retardant up to 240 minutes - tested to EN1366-4 & BS 476:Part 20
- Forms an efficient seal against smoke and gas
- Excellent adhesion on most surfaces (exempt Teflon, PE and PP)
- High thermal and acoustic insulation
- High bonding strength
- Very good filling characteristics
- Excellent stability: no shrink or post-expansion
- Can be painted after full cure
- Fitted with the Click&Fix system for easy and precise application with a foam gun)

SIZE	PART CODE	BOX QTY.
750ml	FIF50701	12

Soudafoam® B3 Gun Grade Foam

This Soudal gun foam is a one component, self expanding ready to use foam. Suitable for window and door frame installation, filling of cavities and sealing of openings in roof constructions.

- Adhesive with most substrates
- Precise application with foam gun system
- High thermal and acoustic insulation
- Excellent filling capabilities
- Very stable (unlikely to shrink after application)

SIZE	PART CODE	BOX QTY.
700ml	FIF50700	12

Xpert Professional PU Applicator Gun

- Stainless steel nozzle
- Full teflon-coated basket and internal parts
- Length: 200mm

USE | CLEAN | REPEAT !
To keep your foam gun in good working order clean regularly

PART CODE	BOX QTY.
GUN10000	1

reXon 351 PU Gun Foam Cleaner

ReXon 351 cleaner can be used to remove every last trace of freshly-applied insulation foam, as well thoroughly clean the foam gun, valve and trigger of any residual foam product. Cleaning must always be done before the foam is dry, otherwise it can only be removed mechanically.

Tip: before use, test in an inconspicuous place to avoid damage of delicate surfaces.

- Do not dilute
- 500ml can

SIZE	PART CODE	BOX QTY.
500ml	FIF20002	12

Gun Foam Cleaner

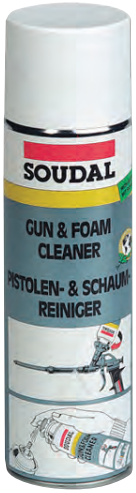

- Aerosol applied solvent based polyurethane foam cleaner used for the cleaning of PU foam applicator guns and gun valves
- Uncured PU foam can also be easily removed with the attachable spray nozzle
- Quick & easy to use
- Attachable spray nozzle

SIZE	PART CODE	BOX QTY.
500ml	FIF50000	12

reXon 125 Acrylic Filler

This ultralight, ready-to-use filler is ideal for levelling the surface of walls and repairing single-layer cracks and holes in plaster, concrete, masonry stone, wood and many other building materials.

- Ultralight
- Does not shrink or crack
- Can be applied indoors and outdoors in temperature between 5°C & 35°C
- Fast drying. Paintable after just a few minutes
- Film formed after 10 minutes
- Completely dry and ready to sand after 24 hours
- Resistant to temperatures between -20°C to + 100°C
- 1 litre pot

COLOUR	SIZE	PART CODE	BOX QTY.
White	1 litre	FIL20001	12

reXon 127 Cement Repair

A convenient, simple way to repair cracks and fill holes in walls without having to go to the trouble and mess of mixing up a batch of mortar from scratch. Easy-to-use and ready-to-go, this high-quality plasto-elastic cement repair has a granular structure and comes in cement grey to make light work of repairing joints in masonry. ReXon 127 cement repair is particularly useful for making good on crumbling cement around windows and window sills during fitting.

- Ready to use and easy to apply
- Suitable for indoor and outdoor use
- Excellent adhesion on all porous substrates such as plaster structure, stone, concrete and wood.
- Can be painted once dry
- Not suitable for joints that are continually exposed to water
- Application temperature: between 5°C & 40°C. (Do not apply when there is a risk of rain or frost)
- 310ml tube
- Drying time: Film formed after 20 minutes
- Hardening: 0.5mm in 24 hours at 23°C and 50% relative humidity
- Allows 5% joint movement

COLOUR	SIZE	PART CODE	BOX QTY.
Grey	300ml	SIL25000	12

Soudafill Light

- Soudafill Light is an ultra lightweight ready to use filler for gaps and cracks in most porous building materials
- Easy to use and fast curing
- Smooth finish, no sanding required
- Sets hard on curing
- Does not sag or shrink
- Can be painted with alkyd & water based paints
- Suitable on most porous surfaces
- Can be sanded after curing

SIZE	PART CODE	BOX QTY.
900ml	FIL10000	6

Butyband Flashing

- Ready to use, self-adhesive, elastoplastic sealing tape based upon butyl rubber
- Fast and excellent adhesion to many substrates
- Waterproof
- Flexible - even when cold
- UV & weather resistant

SIZE	PART CODE	BOX QTY.
10m x 100mm	LFL10100	6

8 In 1 Multi Spray 400ml

- High quality universal spray with eightfold action:

  1. Rust dissolver
  2. Lubricant
  3. Cleaner
  4. Water repellent
  5. Penetrating oil
  6. Corrosion resistant
  7. Contact spray
  8. Shock spray

SIZE	PART CODE	BOX QTY.
400ml	SIL30401	6

Tectane White Grease Spray 400

- High grade lubricant based on white lithium soap with PTFE (Teflon®) additive for heavy duty and low speed applications
- Lubricates
- Protects against wear
- Prevents rust and corrosion
- Water repellent
- Silicone free
- For inside and outside use
- Aerosol can be used at any angle (360°)

SIZE	PART CODE	BOX QTY.
400ml	GEG10100	6

Silicone Spray

- Lithium soap and PTFE based penetrating lubricant and grease
- Waterproof
- Double action effect: applies like oil, then sets like grease
- Anti-corrosion properties
- Suitable for heavy duty lubrication of mechanical parts such as ball bearings, axles, sprockets, conveyer belts and rubber seals

SIZE	PART CODE	BOX QTY.
400ml	SIL30400	12

Cerium Oxide Glass Polishing Compound

- A top quality, high specification optical grade polishing compound
- Tried, tested and approved within the glass processing industry

SIZE	PART CODE	BOX QTY.
1kg	CEO10000	1

WD40 Smart Straw Can

- Thoroughly recommended to clean, preserve and protect all tools
- Smart Straw fixed delivery system so you'll never lose the straw again

SIZE	PART CODE	BOX QTY.
400ml	WD40405	12

Uniwipe Ultragrime Industrial Wipes (pack of 100)

- Removed wipes stay wet and useable for over 60 minutes
- Low smear on glass
- Natural solvent – powerful, yet safe to use on all surfaces including leather & upholstery
- Gentle on skin – alcohol-free and PH neutral
- Efficiently removes PU glue, expanding foam, paint, silicone, grease, grime and much more
- Made in the UK
- 100% recyclable packaging. Wipes are made from recycled material and are 50% biodegradable.

SIZE	PART CODE	BOX QTY.
38 x 25cm	UWU10000	6

PVCu Solvent Cleaner

- Heavy duty cleaner for PVCu materials
- Removes mastic, sealant, grease and dirt

SIZE	PART CODE	BOX QTY.
1 litre	SOL10100	12

Glass Cleaner

- Trade strength glass cleaner
- Removes grease and dirt
- Quick-action non-smearing cleaner

SIZE	PART CODE	BOX QTY.
1 litre	PGC10100	12
5 litre	PGC10500	4
25 litre	PGC12500	1

PVCu Cream Cleaner

- Heavy duty cleaner for PVCu materials
- Domestic and industrial cleaning applications

SIZE	PART CODE	BOX QTY.
1 litre	PUC10100	12

Paper Rolls

- Heavy duty industrial towels 2-ply

SIZE	PART CODE	BOX QTY.
175mm x 150m	TPP21815	6

Multi Purpose Cleaning Wipes

- Heavy duty non-woven wipes impregnated with a mixture of solvents, biodegradable non-ionic surfactants and skin emollients
- Removes many types of contaminants
- Suitable for hands and tools
- Kind to skin

SIZE	PART CODE	BOX QTY.
Tub	SOW10000	1

Paper Rolls

- Heavy duty industrial towels 2-ply

SIZE	COLOUR	PART CODE	BOX QTY.
200mm x 150m	White	TPP22015	6
280mm x 400m	White	TPP22740	2

RODO Tarpaulin

- Suitable for multiple purposes

SIZE	PART CODE	BOX QTY.
5.4 x 3.6m (18 x 12ft)	TAR18120	1

RODO Masking Tape

- Suitable for multiple applications
- Available in 50 metre reels
- 19mm or 25mm wide

SIZE	PART CODE	BOX QTY.
19mm x 50m Roll	TAP90190	1
25mm x 50m Roll	TAP90250	1

RODO Stockinette Roll

- 300mm wide roll

SIZE	PART CODE	BOX QTY.
400g	STN10400	1
800g	STN10800	1

RODO Heavy Duty Dust Sheets

- Heavy duty dust sheets available in two sizes
- 100% cotton fibre
- Washable and reusable
- For inside use

SIZE	PART CODE	BOX QTY.
3.6 x 2.7m (12 x 9ft)	DUS21208	Single Pack
3.6 x 2.7m (12 x 9ft)	DUS21209	Twin Pack
7.3 x 0.9m (24 x 3ft)	DUS22403	Single Pack

FAITHFULL QUALITY TOOLS Metal Dust Pan

- Ideal for collecting dust and dirt
- Width: 280mm

WIDTH	PART CODE	BOX QTY.
280mm	DUP10000	1

FAITHFULL QUALITY TOOLS Plastic Dust Pan & Brush

- Soft bristle PVC banister brush
- Clips in for compact storage
- Width: 220mm

WIDTH	PART CODE	BOX QTY.
220mm	DUP10001	1

PTFE Tape

- Thread seal tape
- Size: 0.075mm x 12mm x 12m
- BS 7786: 1995 Grade L potable water
- WRAS Approved

PART CODE	BOX QTY.
TAP10000	1

Electrical Tape

- Conforms to BS3924 and IEC454
- Colours: green/yellow, black, red and blue
- Size: 19mm x 20m

SIZE	PART CODE	BOX QTY.
19mm x 20m Roll	TAP10001	1

Trim Mounting Tape

UK Industrial Tapes Ltd

- No curling, no mess, no waste
- Easy to use
- Adheres to almost all plastic surfaces
- Trim mounting tape is a double-sided foam tape especially developed for the permanent bonding of internal lightweight plastic finishing trims on to PVCu windows, doors, conservatory profiles and similar applications
- The product utilises a 100% closed cell polymeric foam coated with a high tack pressure-sensitive adhesive system

SIZE (W x T x L)	WHITE	BLACK	BOX QTY.
(9 x 1mm) x 50m	TAP510100	TAP510105	1

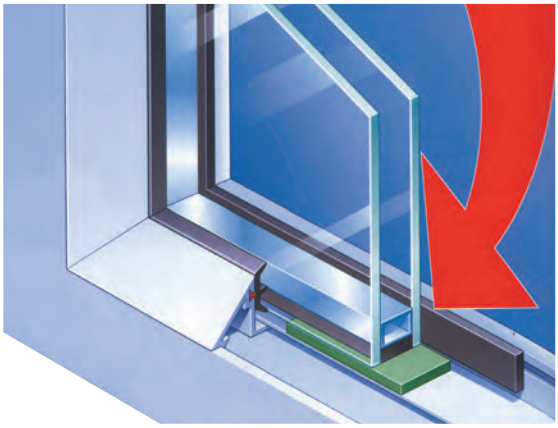

Security Glazing Tape

UK Industrial Tapes Ltd

- Cost effective – replaces the internal gasket / reduces site glazing time
- High quality adhesive system for maximum performance
- 15 year guarantee on PVC-DSX tape
- Enables externally beaded windows to satisfy the glazing requirements of BS7950
- BBA certified product
- Glazing tape consists of a flexible, cellular foam carrier coated on both sides with a specialised high quality pressure sensitive adhesive system
- PCV-DSX – High density, substantially closed cell PVC foam for increased strength. Excellent intrusion resistance
- PE-DSP – 100% low density closed cell polyethylene (PE) foam, entry level grade with good intrusion resistance

TYPE	FINISH	SIZE	1mm	2mm	3mm	4mm	5mm	**6mm**
PE-DSP	WHITE	10mm	TAP610240	TAP610325	TAP610420	TAP610515	TAP610615	-
PE-DSP	BLACK	10mm	TAP11000	TAP410240	TAP410325	TAP410420	TAP410515	TAP410615
PE-DSP	BLACK	11mm	-	-	TAP312305	TAP312405	TAP312505 (12m)	-
PE-DSP	BLACK	15mm	-	-	-	TAP415420	-	-
PE-DSP	BLACK	16mm	-	-	-	TAP316405	-	-
PE-DSP	BLACK	19mm	TAP319105	-	TAP312605	-	-	-
PE-DSP	BLACK	20mm	-	-	-	TAP320405	-	-
PVC-DSX	BLACK	11mm	-	-	TAP112305	TAP112405	TAP112505	-
PVC-DSX	BLACK	12mm	TAP122105	-	-	-	-	-
LENGTH			50m	40m	25m	20m	15m	15m

Standard Self-Adhesive Foam Draught Excluder

- Seals gaps of up to 3mm
- Can be wiped clean
- Comes with self adhesive back
- Excellent memory properties - will return to its original shape after compression
- Ideal use for gaps around door and windows
- Available in 5 or 15m packs and in white or brown finishes
- Dimensions: 7mm wide and 4mm thick

THICKNESS	WIDTH	LENGTH	WHITE	BROWN	BOX QTY.
4mm	7mm	5m	STG10000	STG10002	20
4mm	7mm	15m	STG11000	STG11002	20

Ultraseal Self-Adhesive Foam Draught Excluder

- Seals gaps between 1 & 5mm
- Comes with self adhesive back
- Excellent memory properties - will return to its original shape after compression
- Ideal use for gaps with a variable size around door and windows
- Available in 5 or 15m packs and in white or brown finishes
- Dimensions: 8mm wide and 6mm thick

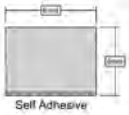

THICKNESS	WIDTH	LENGTH	WHITE	BROWN	BOX QTY.
6mm	8mm	5m	STG20000	STG20002	20
6mm	8mm	15m	STG21000	STG21002	20

Extra Thick & Jumbo Weather Strip

- Suitable for use to seal gaps between 2-7mm
- Supplied with self adhesive back
- Can be wiped clean
- Excellent memory properties - will return to its original shape after compression
- Ideal use for gaps with a variable size around door and windows
- Thick weather strip supplied in 3.5m packs and available in White, Black or Brown colours
- Jumbo weather strip supplied in 3m packs and available in White, Black colours
- Dimensions: Thick weather strip 13 x 7mm
  Jumbo weather strip 19 x 10mm

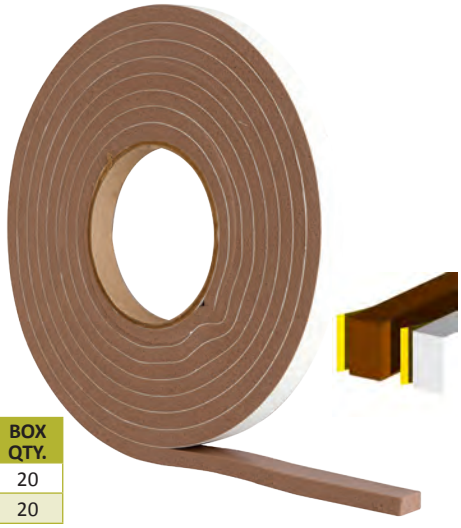

TYPE	WIDTH	LENGTH	WHITE	BROWN	BLACK	BOX QTY.
Jumbo	19 x 10mm	3m	STG60000	–	STG60005	20
Thick	13 x 7mm	3.5m	STG30000	STG30002	STG30005	20

EPDM 'P' Profile Rubber Seal

Stormguard

- High quality long life rubber (ethylene propylene diene M-class rubber) draught strip
- Self adhesive
- Part of the EPDM range of rubber strips.
- Ideal for gaps 3-5mm
- Resistant to stretch during fitting and use
- EPDM 'E' Style strip also available to seal gaps of 1.5-3mm
- Available in 5m packs and in White or Brown finish

LENGTH	WHITE	BROWN	BOX QTY.
5m	STG40000	STG40002	20

EPDM 'E' Profile Rubber Seal

Stormguard

- High quality long life rubber (ethylene propylene diene M-class rubber) draught strip
- Self adhesive
- Part of the EPDM range of rubber strips
- Ideal for gaps 1.5-3mm
- Resistant to stretch during fitting and use
- EPDM 'P' Style strip also available to seal gaps of 3-5mm
- Available in 5m packs and in White or Brown finish

LENGTH	WHITE	BROWN	BOX QTY.
5m	STG41000	STG41002	20

V-Profile Seal Tape

Stormguard

- For use on wooden and metal hinged doors & windows
- Designed to seal gaps between 1-8mm
- Self adhesive
- Self adjusting
- Surface can be wiped clean
- Extremely low closing pressure
- Available in 5m packs in White or Brown finish

LENGTH	WHITE	BROWN	BOX QTY.
5m	STG70000	STG70002	20

Stormguard — Brush Pile Self-Adhesive Draught Excluder Weather Seal

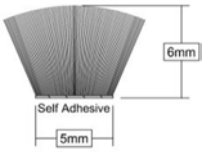

- Self adhesive brush pile
- Door and window self-adhesive draught excluder with brush pile
- Suitable for gaps 3-5mm
- Available in 5M packs and White, Brown, Black and Grey finishes

LENGTH	WHITE	GREY	BROWN	BLACK	BOX QTY.
5m	STG50000	STG50001	STG50002	STG50005	20

Glazpart — Mixed Screw Cover Caps

- Collar with integral cap conceals fixing screw heads for a neater finish

PART CODE	BOX QTY.
GBK681100	100

Glazpart — Glazing Packers in Bulk & Convenience size packs

- Glazing packers for toe & heeling glazed units
- All packers are 100mm long
- Handy convenience packs of 100s or 1000s
- Singles in 100s or 1000s
- Mixed in 100s, 300s or 500s

WIDTH	1mm GREEN	2mm BLACK	3mm WHITE	BOX QTY.
20mm	GBK21201	GBK21202	GBK21203	1000
24mm	GBK21241	GBK21242	GBK21243	1000
26mm	GBK21001	GBK21002	-	1000
28mm	GBK10281	GBK10282	GBK10283	1000
28mm	GBK281001	GBK281002	GBK281003	100
30mm	GBK10301	GBK10302	GBK10303	1000
32mm	GBK10321	GBK10322	GBK10323	1000
WIDTH	**4mm GREY**	**5mm BLUE**	**6mm RED**	**BOX QTY.**
20mm	GBK21204	GBK21205	-	1000
24mm	GBK21244	GBK21245	GBK21246	1000
28mm	GBK10284	GBK10285	GBK10286	1000
28mm	GBK281004	GBK281005	GBK281006	100
30mm	GBK10304	GBK10305	GBK10306	1000
32mm	GBK10324	GBK10325	GBK10326	1000

WIDTH	1mm GREEN	2mm BLACK	3mm WHITE	4mm GREY	5mm BLUE	6mm RED	BOX QTY.
28mm	(Mixed Pack 1-6mm) GBK281000M						100
28mm	(Mixed Pack 1-6mm) GBK28300						300
28mm	(Mixed Pack 1-6mm) GBK28600						600

Bridging Packers

- Bridging packers for toe & heeling glazed units
- Maintains water escape and ventilation around glazed units
- Bridges over upstands/legs on profiles to give a flat glazing platform

WIDTH	4mm BLACK	BOX QTY.
20mm	GBK20204	1000
28mm	GBK20284	1000
40mm	GBK20404	1000

U-Style Frame Packer

- Designed for use during the installation of the window frame into the window reveal
- Their function is to prevent the deflection of the frame during the installation
- Increase security around the fixing point
- The "U" shaped design allows for a packer to be installed around the fixing and supporting the fixing point

WIDTH	LENGTH	1mm GREEN	3mm BLACK	5mm WHITE	BOX QTY.
45mm	60mm	GBK45601	GBK45603	GBK45605	1000

Flexible Corner Glazing Wedges

- Supplied as mixed sets
- This combination set replaces 2 glazing packers and correctly locates them into the window corners
- With these parts they locate automatically and eliminate the need for silicone on the vertical (location block) to retain the packer during installation

SETS	PART CODE	BOX QTY.
40	GBK600282	100

Klip Frame Packers

- Designed for use during the installation of window frame into the reveal
- The KLIP exerts a lateral force between the frame packer and the fixing, to hold the frame packer in place and prevent it from rotating or falling out
- The additional tab makes positioning of the frame packer even easier, especially when working at height
- Once the window is in position, the tab is bent over and broken off

WIDTH	LENGTH	1mm GREY	3mm RED	5mm GREEN	BOX QTY.
60mm	50mm	GBK60501	GBK60503	GBK60505	100

WINDOW PRODUCTS LIMITED

SNAP-LOK
Glass Retention Device

Snap-Loks work to keep the glass firmly in place on internally glazed window and doors. They fit between the sash and glass to retain the glass even if the beading is removed and prevent it from being pushed inwards and right out of the sash. Snap-Loks can help to enhance the security performance of door sets and window assemblies during PAS 24 testing (particular the part B and C manipulation tests) and increase their resistance to physical attack with tools.

- Made from strong high-tensile steel
- 240 hours salt spray
- Designed and manufactured in the UK
- GTS30005 fits 28mm glazed unit thickness for Eurocell, System 10, Rustique, Veka FS70 PVCu profile systems, for other profile systems, please contact our sales office.

Tip: Use the adhesive tape provided to bond the Snap-Lok to the glass and prevent it from falling down inside the frame. For best results, we recommend you fit two Snap-Lok devices at the top and bottom of the window, or in a diamond formation. On very large sashes, additional Snap-Loks may be required.

Installation Guidance

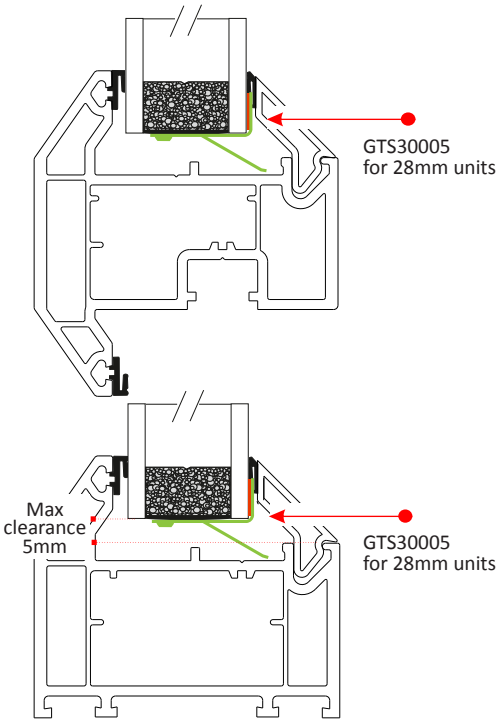

Key

For units up to 900mm width and 1200mm height fit a minimum of 4 GT Snap-Loks see figs 1 and 2

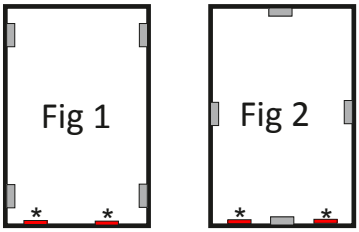

Fit glazing packers on the bottom rail shown marked *

For larger units then it is advisable to fit addtional Snap-Loks as shown in fig 3

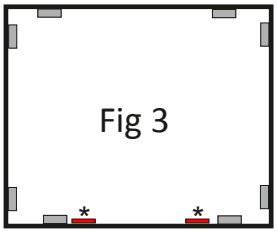

28mm THICKNESS	BOX QTY.	Fits the following PVCu profiles:-
GTS30005	200	Eurocell System 10 Rustique Veka FS70

Glazing Shovel

- Blade width: 68mm
- ABS Plastic
- Ideal for toe and healing when glazing windows

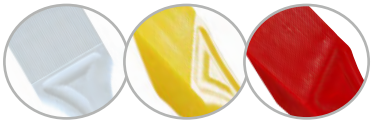

WHITE	YELLOW	RED	BOX QTY.
GLS83000A	GLS830001	GLS830002	50

32mm Chisel/Bead Knife

- 32mm stiff chrome polished chisel blade - ideal for removing window beads
- Cushioned grip handle with steel end cap

PART CODE	BOX QTY.
KNF10001	10

Glass Gauge

- Used to measure the thickness of sealed glass units without removing them from the window
- Robust frame and ruler
- manufactured from steel
- Comes in a hard plastic carry case
- Double-sided rule with imperial & metric units
- 104mm opening - enables you to measure round the widest of door frames

PART CODE	BOX QTY.
GTG20000	10

1 Cup Aluminium Body Suction Lifters

50kg MAX HORIZONTAL

35kg MAX VERTICAL

- Heavy duty, 115mm suction pad
- Suction cups must be kept clean and unmarked to avoid malfunction

SINGLE	BOX QTY.
SUC10000	1

2 Cup Aluminium Body Suction Lifters

100kg MAX HORIZONTAL

85kg MAX VERTICAL

- Heavy duty, 115mm suction pad
- Suction cups must be kept clean and unmarked to avoid malfunction

DOUBLE	BOX QTY.
SUC10002	1

3 Cup Aluminium Body Suction Lifters

155kg MAX HORIZONTAL

140kg MAX VERTICAL

- Heavy duty, 115mm suction pad
- Suction cups must be kept clean and unmarked to avoid malfunction

TRIPLE	BOX QTY.
SUC10003	1

8" Vacuum Glass Lifter

100kg MAX HORIZONTAL

100kg MAX VERTICAL

- 100kg max lifting
- Pump up red line marker
- Complete with carry case

SINGLE 100kg	BOX QTY.
SUC20000	1

Circular Glass Cutter

- 55mm rubber suction pad
- Cuts up to 300mm diameter
- Metric 6 tungsten carbide wheels fixed to a turret

PART CODE	BOX QTY.
GLC10000	1

Lubricated Clear Glass Cutter

- Length: 175mm
- Hardened alloy steel cutting wheel
- Spring loaded block controls flow of lubricant
- Plastic body
- Internal oil reservoir

PART CODE	BOX QTY.
GLC20000	1

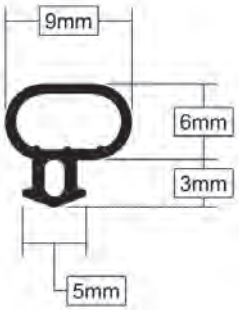

Replacement PVCu Gasket

- Replacement window & door gasket
- Fits all known PVCu profiles
- Also fits the Stormguard slimline products
- 20 metre length supplied in a tub
- Black finish

PART CODE	BOX QTY.
GKT10000	1

Gasket Roller

- Rubber wheel
- Steel arm
- Used to roll gasket on plastic and aluminium windows

PART CODE	BOX QTY.
GKT30000	1

Gasket Snips

- Length: 140mm
- For cutting gasket and tin.

PART CODE	BOX QTY.
GKT20000	1

Hilka Traditional Style Tin Snips

- Length: 250mm (10 inch)
- Anti-nip lugs on handle
- Hardened steel blades

PART CODE	BOX QTY.
GKT20001	1

ORIGINAL LOWE Anvil Cutters 25-5105 & 40-1105

- 25 or 40mm cut length
- Without stop faces
- Versatile cutter suited for various metals

25mm 5105	40mm 1105	BOX QTY.
GKT40001	GKT40002	1

ORIGINAL LOWE Universal Mitre Shear

- PVC handles
- Multi angled base: 45-90°
- Ideal for cutting gasket, small plastic and wooden trims

PART CODE	BOX QTY.
GKT03804A	1

ORIGINAL LOWE Mitre Shear

- PVC handles
- Multi angled base: 45-90°
- Ideal for cutting plastic and wooden trims

PART CODE	BOX QTY.
GKT40000	1

Xpert Universal Mitre/Gasket/ Trim Shear

- Multi angled base: 45-90°
- Accepts Trim and Stanley blades
- Cushioned grip handles for extra comfort/safety

PART CODE	BOX QTY.
GKT03804	1

Xpert Mitre/Gasket/Trim Shear

- Multi angled base: 45-90°
- Cushioned grip handles for extra comfort/safety
- High quality

PART CODE	BOX QTY.
GKT03104	1

Spare Blade for LOWE/XPERT Mitre Shears

Fits SK5 GKT03104	Fits 5105 GKT40001	Fits 1105 GKT40002	Fit 3104	BOX QTY.
GKT03105	BLD50000	BLD50001	BLD30000	1

Spare Base Plate for XPERT Mitre Shears

PART CODE	BOX QTY.
GKT03106	1

Carpenters Pincers

- Length: 200mm
- Carbon steel pincers
- Ground head with black painted handles

PART CODE	BOX QTY.
PIN10000	1

End Cutting Pliers

- Made from drop forged steel for high strength and durability
- The handles are made from polypropylene with TPR overlay
- Their zone configuration provides added power, comfort and control
- Size 150mm

PART CODE	BOX QTY.
VDE10003	1

Deburring Tool

- Length: 240mm
- Rotating cutting blade for use on steel, copper, brass and plastic

PART CODE	BOX QTY.
DBT10240	1

VDE Side Cutters

- 1000V insulated
- VDE certified to EN60900
- Durable chrome-vanadium steel
- Nickel iron plated
- Non-slip comfort grip handle

SIDE CUTTER	BOX QTY.
VDE41160	6

VDE Combination Pliers

- 1000V insulated
- VDE certified to EN60900
- Durable chrome-vanadium steel
- Nickel iron plated
- Non-slip comfort grip handle

COMBINATION	BOX QTY.
VDE41180	6

VDE Long Nose Pliers

- 1000V insulated
- VDE certified to EN60900
- Durable chrome-vanadium steel
- Nickel iron plated
- Non-slip comfort grip handle

LONG NOSE	BOX QTY.
VDE41160L	6

Hacking Knife

- 4.5” steel blade with twin leather scales riveted to the shaft
- Can be struck with a hammer to remove putty from window frames

PART CODE	BOX QTY.
KNF10006	1

Hacking Knife

- Length: 120mm
- Ideal for removing old putty from window frames
- Solid 1 piece knife riveted to a hardwood handle

PART CODE	BOX QTY.
KNF10005	1

32mm Chisel Knife/Bead Knife

- 32mm stiff chrome polished chisel blade - ideal for removing window beads
- Cushioned grip handle with steel end cap

PART CODE	BOX QTY.
KNF10001	10

10 in 1 Multi-Purpose Knife

- 75mm stiff chrome polished blade
- Ideal for removing window beads
- Cushioned grip handle with steel end cap
- Multi functions:

1	Pointed scraper	6	Roller cleaner
2	Spreader	7	Nail/Tack remover
3	Flat surface scraper	8	Convex scraper
4	Paint can opener	9	Bottle opener
5	Concave scraper	10	Hammer

PART CODE	BOX QTY.
KNF10002	10

Pallet Knife

- Strong, thick stainless steel straight blade
- Very sharp knife used for removing beading and trimming plus much more

PART CODE	BOX QTY.
DCK10003	10

Original Don Carlos Knife

- Very sharp stainless steel blade
- Used for removing sprues from PVCu windows (when used with a sprue guide) or as a general purpose knife

NB: this item is a knife and not designed to remove beads. For bead removers, see: 10 in 1 knife, chisel knife or Don Carlos pallet knife.

PART CODE	BOX QTY.
DCK10002	12

Trade Moon Knife

- Sharp steel blade
- Soft grip handle
- Ideal for removing sprues on PVCu windows or as a general purpose knife

PART CODE	BOX QTY.
DCK10001	1

Moon/Sprue Knife

- Sharp stainless steel
- Non slip cushioned handle for comfort/safety
- Used to remove sprues on PVCu windows (when used with a sprue guide) or a general purpose knife

NB: this item is a knife and not designed to remove beads. For bead removers, see: 10 in 1 knife, chisel knife or Don Carlos pallet knife.

PART CODE	BOX QTY.
DCK10000	1

Wooden Lino Knife

- Blade length: 75mm
- Hook blade knife for precise incisions into lino and similar materials

PART CODE	BOX QTY.
KNF20000	1

Scraper Comfort-grip Handle

- Hardened, flexible ground steel blade
- Choose from 50mm and 80mm blade widths
- Ergonomic comfort-grip TPR handle

50mm	80mm	BOX QTY.
FIL41050	FIL41080	1

Putty Knife

- High quality knife with comfortable soft grip handle

PART CODE	BOX QTY.
PUTTYKNIFE	1

Putty Knife

- Stainless steel
- High quality
- Easy to clean
- Rust free

PART CODE	BOX QTY.
KNF028654	1

Xpert Heavy Duty Knife

- Zinc alloy case with TPR handle
- Quick blade changing and 3 stage blade locking - Internal blade storage

PART CODE	BOX QTY.
KNF10000	6

PERSONNA Auto Change Retractable Knife + 3 Blades

- Quick release
- Metal handle with soft comfort grips
- Auto loads new blade when old blade has been removed
- Supplied with 3 blades

PART CODE	BOX QTY.
KNF10008	1

KENDO Your Professional Partner Folding Utility Knife + 5 Blades

- Locking action secures blade in open position during use
- Folds down to 90mm for compact storage in closed position
- Quick-release lever for fast, easy blade change
- Supplied with 5 spare blades and storage case

PART CODE	BOX QTY.
KNF41015	12

PERSONNA Pro Folding Pocket Knife + 6 Blades

- Pro folding pocket knife that folds to a small pocket size and opens to full size with a soft comfort grip
- It has a quick release button to allow fast blade changes
- Supplied with 6 blades

PART CODE	BOX QTY.
KNF10011	1

KENDO Your Professional Partner Snap-Off Blade Knife

- 18mm blade width
- Soft-grip, anti-slip handle
- Quick-change blade cartridge

PART CODE	BOX QTY.
KNF41010	12

STANLEY Knife with Snap-Off Blade

- Anti-slip, plastic-grip handle
- Pre-loaded with 8 snap-off blades in the quick-change cartridge
- 18mm blades

PART CODE	BOX QTY.
KNF10004	1

Contoured Retractable Knife with Holster

- Quick release mechanism for changing blades
- Ergonomically designed handle

PART CODE	BOX QTY.
KNF10012	1

Trim Knife Blades Pack of 10 or 100

- Heavy duty blades
- 0.06mm thickness

10 PACK	100 PACK	BOX QTY.
BLDCT09	BLDCT10	1

Number 4 Hand Plane

- Blade 50 x 2 x 225mm
- Easy blade removal
- Simple rapid level adjustment

PART CODE	BOX QTY.
PLN10004	1

Metal Scraper

- Stainless steel body with soft comfort grip
- 39mm wide blade
- Spare blades available separately in boxes of 10

PART CODE	BOX QTY.
WNS41000	20

Single Sided Scraper Blades

- Strong steel single sided blade

PART CODE	BOX QTY.
WNS10001	10

Window Scraper

- Heavy duty metal window scraper with a retractable blade
- An ideal tool for scraping or cleaning hard surfaces, removing labels, spills, paint, hob and oven cleaning etc.

PART CODE	BOX QTY.
WNS10000	1

KENDO® Your Professional Partner — Wood Chisels

- Strong, hardened annealed steel bevel-edge blade
- Cushioned grip handle
- Steel striking end cap on handle for extra cutting force
- Available blade widths: 6, 12, 19 & 25mm

SIZE	PART CODE	BOX QTY.	SIZE	PART CODE	BOX QTY.
6mm	CHS41006	12	19mm	CHS41019	12
12mm	CHS41013	12	25mm	CHS41025	12

IRWIN® TOOLS — Marple Chisels

- Carbon rich solid 1 piece blade
- Guaranteed split proof handle
- Friction grip
- Sturdy neck and bolster
- Honed and sharpened

TYPE/SIZE	PART CODE	BOX QTY.	SIZE	PART CODE	BOX QTY.
5 Piece Set	CHS75055	1	1/2 inch	CHS75012	1
1/8 inch	CHS75018	1	3/4 inch	CHS75034	1
1/4 inch	CHS75014	1	1 inch	CHS7501	1
3/8 inch	CHS75538	1			

Hilka — Cold Chisels

- Length: 220mm
- Solid forged with hardened cutting edge
- With guard

75mm with guard	BOX QTY.
BOL10075G	1

STANLEY® — FatMax 75mm/100mm Bolster + Guard

- Carbon rich solid 1 piece blade
- Guaranteed split proof handle
- Friction grip
- Sturdy neck and bolster
- Honed and sharpened

75mm with guard	100mm no guard	BOX QTY.
BOL20075	BOL200100	1

FAITHFULL® QUALITY TOOLS — Sharpening Stone

- Size: 200 x 50 x 25mm
- Combination oil stone made from aluminium oxide with 1 fine face and 1 coarse face
- Can be used either dry or with light oil

PART CODE	BOX QTY.
SHS10000	1

FAITHFULL® QUALITY TOOLS — Box for Sharpening Stone

To avoid workshop dust and unwanted oil deposits this crafted beach oil stone box is designed to store any standard 200 x 50 x 25mm oil stone.

PART CODE	BOX QTY.
SHS10001	1

Flat Pry Bar

KENDO® Your Professional Partner

- Length: 375mm
- Made from hardened carbon steel
- Integrated nail puller
- Polished tips reduce the risk of leaving marks

375mm	BOX QTY.
FPB41450	10

Wonder Bar X21 Pry Bar

STANLEY®

- Length: 530mm
- Forged high carbon steel
- Nail puller
- Contoured bar for easier use

530mm	BOX QTY.
SPB10530	1

Samson Wrecking Bar

SILVERLINE

- Hardened and tempered carbon steel
- Powerful lever action with unique head design

450mm	600mm	BOX QTY.
WRB10450	WRB10600	1

Wrecking Bars

KENDO® Your Professional Partner

- Nail puller claw end and chisel end
- Drop-forged and ground from hexagonal steel for ultimate strength and durability
- Polished tips
- Two lengths available: 600 & 900mm

600mm	900mm	BOX QTY.
WRB41600	WRB41900	12

Wrecking Bars

STANLEY®

- Forged high carbon alloy steel
- Heat tested
- Heavy duty claw end with bevelled nail slot

460mm	610mm	910mm	BOX QTY.
WRB155155	WRB155156	WRB155157	1

FatMax Steel Claw Bar

STANLEY®

- Size: 12”
- Spring steel
- Non slip grip
- Bevelled claws for better access and greater torque

12"	BOX QTY.
WRB155512	1

KENDO® Your Professional Partner — One-piece Claw Hammer

- 16oz head with nail puller
- Drop-forged one-piece steel construction delivers strength and durability
- Ergonomic soft-grip TPR handle
- Hardened and tempered

16oz	BOX QTY.
HAM41016	1

STANLEY® — FatMax Vibration Dampening Curved Claw Nailing Hammer

- Two-piece steel construction with isolated steel head for best-in-class vibration dampening
- 14oz hammer strikes with the force of a 20oz

14oz	BOX QTY.
HAM20000	1

KENDO® Your Professional Partner — Tubular Claw Hammer

- Drop-forged 16oz carbon steel head with nail puller
- Strong but light-weight tubular shaft for easy lifting
- Ergonomic soft-grip TPR handle
- Hardened and tempered

16oz	BOX QTY.
HAM41016A	1

STANLEY® — 3lb FatMax Anti-vibe Lump Hammer

Wide face make ideal for striking chisels and punches, soft handle with antivibe technology.

3lb	BOX QTY.
HAM156001	1

KENDO® Your Professional Partner — Club Hammer

- Rust-resistant black painted drop forged carbon steel head
- Polished striking face
- Reinforced fibreglass shaft
- Ergonomic, non-slip rubberised handle for improved grip and shock absorption

2lb	4lb	BOX QTY.
HAM41001	HAM41002	6

Xpert — 16oz Rubber Mallet

- Cushioned grip handle for extra comfort/safety
- High quality

16oz	BOX QTY.
HAM10001	1

Glazing Hammer

- Thorex plastic hammer with chrome plated zinc head and plastic handle
- Fitted as standard with two screw-in orange plastic heads
- Faces are designed to wear and are easily replaceable

COLOUR	GRADE	TYPE 410 32mm dia	TYPE 412 38mm dia	BOX QTY.
Orange	Medium	NHM10002	NHM10000	1

Glazing Mallet

- White nylon face

TYPE	HANDLE	HEAD			PART CODE
		SIZE dia	FINISH	GRADE	
708	Hickory	25mm	White	Standard	NHM20025
710	Nylon with Rubber grip	32mm	White	Standard	NHM20032
712	Nylon with Rubber grip	38mm	White	Standard	NHM20038

Replacement Heads for Glazing Hammer

- Replacement plastic heads for glazing hammer

COLOUR	GRADE	TYPE 410 32mm dia	TYPE 412 38mm dia	BOX QTY.
Orange	Medium	NHM10324	NHM10001	1
Grey	Soft	NHM10323	NHM10329	1

Spare Faces for Glazing Mallet

- Grey rubber, white nylon and red, yellow & brown plastic

COLOUR	GRADE	TYPE 708 25mm dia	TYPE 710 32mm dia	TYPE 712 38mm dia
Grey	Soft	NHM10251	NHM10325	NHM10381
White	Standard	NHM10252	NHM10322	NHM10382
Red	Medium	-	NHM10326A	NHM10383
Yellow	Hard	-	NHM10327	NHM10384
Brown	Tough	-	NHM10328	NHM10385

Lead Dresser

- Size: 50 x 170mm
- For forming sheet lead, copper, zinc and magnesium
- Manufactured from high density plastic
- Rounded corners and raised handle grip to give plenty of knuckle room when hammering or shaping materials
- Extremely tough
- Will withstand hammering on all working faces

PART CODE	BOX QTY.
LDR10000	1

Sprue Guide

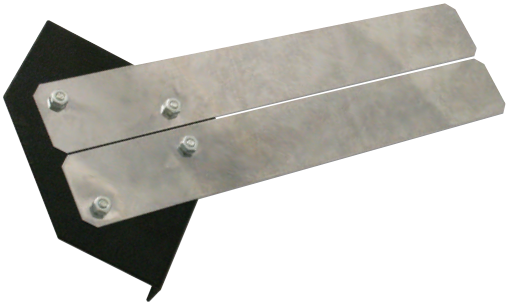

- 0.4mm sprue guide allows fast and accurate removal of the weld sprue on PVCu welded profiles using the industry standard moon knife (see page 411)

PART CODE	BOX QTY.
SPRUEGUIDE	1

Builders Saw 560mm / 22'' 8ppi

- Hardpoint
- 560mm / 22"
- 8 ppi (points per inch)
- For cutting wood, chipboard, tongue & groove
- Handy ruler printed on top saw edge to make marking up easier

22' 8PPI'	BOX QTY.
SAW40002	1

Predator Saw Universal 20" 8ppi

- A general-purpose saw for use across the grain
- 8 points per inch
- Fast cut, rapid, clean cutting action
- Rigid blade minimises whip and vibration
- Ideal for timber, hardwood, chipboard and MDF
- Comfortable handle Sure-grip® soft-feel ergonomic grip and finger guide for accuracy
- Also incorporating a useful 45/90˚ angle guide

20" 8PPI	BOX QTY.
SAW30002	10

PVCu Saw 508mm / 20'' 14ppi

- Hardpoint
- 508mm / 20"
- 14 ppi (points per inch)
- For cutting PVCu, fascia, soffits & trims
- Handy ruler printed on top saw edge to make marking up easier

20' 14PPI'	BOX QTY.
SAW40001	1

Predator Saw UPVC 22" 14ppi

- Length: 22", 14 points per inch
- Rigid 0.91 blade minimises whip and vibration
- Lasts 20% longer than the competition
- Accurate cutting, fine finish
- Comfort grip handle

22'' 14PPI	BOX QTY.
SAW30001	1

Toolbox Saw 360mm / 14'' 16ppi

- Hardpoint
- 360mm / 14"
- 16 ppi (points per inch), fine tooth blade
- Ideal for cutting PVCu, wood or plastic pipe
- Handy ruler printed on top saw edge to make marking up easier

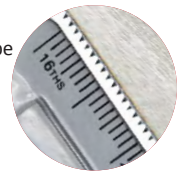

14' 16PPI'	BOX QTY.
SAW90004	1

Toolbox Saw 14'' 16ppi

- Length: 14", 16 points per inch
- Ideal for cutting plastic

14" 16PPI	BOX QTY.
SAW90005	4

Predator Saw First Fix for wood 22” 7ppi

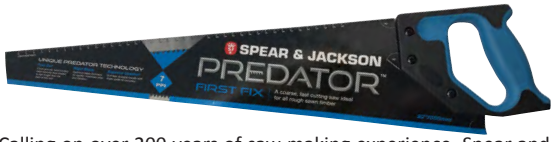

Calling on over 200 years of saw-making experience, Spear and Jackson has created this highly-efficient long-blade course-cutting wood saw, designed to make fast, efficient work of cuts along and across the grain of rough-sawn timber.

- Rigid 22” (559mm) hardened, tempered carbon steel blade reduces whip & vibration
- 7 PPI hardpoint teeth stay sharper for longer and deliver rapid, course-grade cutting
- High-impact polystyrene handle features a handy 45/90° angle guide
- Comfortable and ergonomic non-slip grip

22” 7PPI	BOX QTY.
SAW30003	10

Predator Saw Second Fix for Wood 22” 10ppi

- Length: 22”, 10 teeth per inch
- Rigid 0.91 blade minimises whip and vibration
- Lasts 20% longer than the competition
- Accurate cutting, fine finish
- Comfort grip handle

22'' 10PPI	BOX QTY.
SAW30000	1

Predator Saw Universal for Wood 22” 8ppi

Make short work of cuts along and across the grain in hard- or softwood timber, chipboard and MDF with the Predator 22” 8 PPI wood saw from renowned hand tool specialist, Spear and Jackson. The 8 PPI stay-sharp teeth make that first cut easier and achieve bi-directional cutting to tackle your sawing tasks in less time.

- Rigid 22” (559mm) hardened, tempered carbon steel blade reduces whip & vibration
- 8 ppi hardpoint teeth stay sharper for longer
- Efficient sawing - fleam tooth configuration cuts on both the forward and backwards stroke
- High-impact polystyrene handle features a handy 45/90° angle guide

22'' 8PPI	BOX QTY.
SAW30004	1

Composite Hacksaw 300mm

- Size: 300mm
- Lightweight durable frame

	SPARE BLADES	BOX QTY.
SPEAR & JACKSON	BLD20000	100 Pack
IRWIN	BLD10000	2 Pack
IRWIN	BLD10100	100 Pack

300mm	BOX QTY.
SAW215892	1

6'' Lightweight Junior Hacksaw & Spare Blades

- Rubber handle
- Ideal for hard-to-reach areas

SPARE BLADES	BOX QTY.
BLD10000A	6 PACK

6''	BOX QTY.
SAW10000	1

Junior Hacksaw 150mm

- Size: 150mm
- Large contoured handle and blade
- Tensioning screw provides more control and better performance

150mm	BOX QTY.
SAW10001	1

Coping Saw 7" 24ppi

- Blade size: 120mm x 24 points per inch
- Heavy gauge frame
- Blade adjusts to: 90°, 180° and 270°

SPARE BLADES	BOX QTY.
BLD20000A	6 PACK

7''	BOX QTY.
SAW20000	1

Hilka Soft Grip Files

- Length: 250mm
- 36 teeth per inch approx

TYPE	PART CODE	BOX QTY.
1/2 Round	FIL10001	1
Flat	FIL10002	1
Complete 3pc Set	FIL20000	1

BAHCO File Set -5 Piece

- Includes: hand bastard, hand second, square bastard, half round bastard, round bastard

PART CODE	BOX QTY.
BAH47808	1

BAHCO Needle Files - 6 Piece

- Sizes: 16cm
- Cut 2 (Smooth)
- Includes: hand, flat, half round, round, 3 square, square
- For fine filing and polishing jobs

PART CODE	BOX QTY.
BAH470	1

INDASA Hook and Loop Sanding Discs

- Size: 150mm, plain
- Grits: P120, P180, P240, P320, P400, P500

GRIT	PART CODE	BOX QTY.	GRIT	PART CODE	BOX QTY.
P120	SDC10120	100	P320	SDC10320	100
P180	SDC10180	100	P400	SDC10400	100
P240	SDC10240	100	P500	SDC10500	100

Sip products for professionals Spare Backing Pads

- Size: 150mm / 6 inch
- Thread: M8 male
- Pad type: polyurethane or hook and loop

HOOK & LOOP	SELF ADHESIVE	BOX QTY.
SPP10000	SPP10001	1

INDASA Self Adhesive Sanding Discs

- Size: 150mm, plain
- Grits: P120, P180, P240, P320, P400, P500

GRIT	PART CODE	BOX QTY.	GRIT	PART CODE	BOX QTY.
P120	SDC20120	100	P320	SDC20320	100
P180	SDC20180	100	P400	SDC20400	100
P240	SDC20240	100	P500	SDC20500	100

Sanding Block

- Ergonomic curved block for use with 150mm hook and loop sanding discs

PART CODE	BOX QTY.
SBK10000	1

Sandpaper Roll

INDASA

- Size: 115mm x 50m, aluminium oxide
- Grits: P180, P240, P320, P400, P500

GRIT	PART CODE	BOX QTY.	GRIT	PART CODE	BOX QTY.
P120	SDC30120	50m	P320	SDC301320	50m
P180	SDC30180	50m	P400	SDC30400	50m
P240	SDC30240	50m	P500	SDC30500	50m

CHISELS | HAMMERS | HEX KEYS | KNIVES | PLIERS
SCRAPERS | LEVELS | SQUARES | TOOL BOXES

KENDO®
Your Professional Partner

Tools you can trust

01234 242724 | www.windowware.co.uk

Attention all Xpert tools stockists!

We've got everything you need to promote your range and grow your sales, including:

- **Free-standing retail display stands**
- **Detailed 24-page brochures**
- **Handy product flyers**
- **Xpert-branded promotional merchandise**
- **Online Xpert stockist finder**

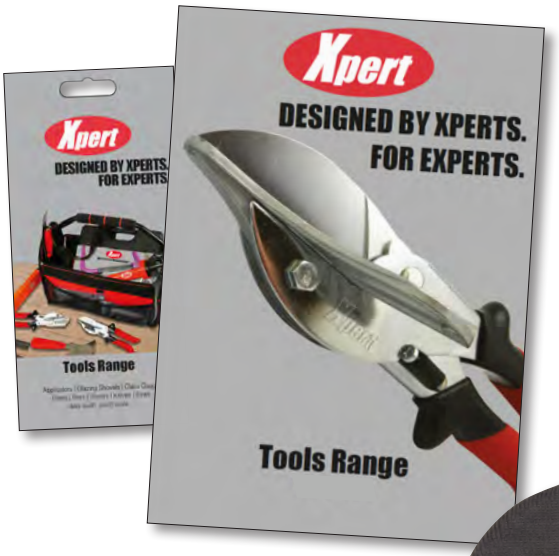

www.xperttools.co.uk

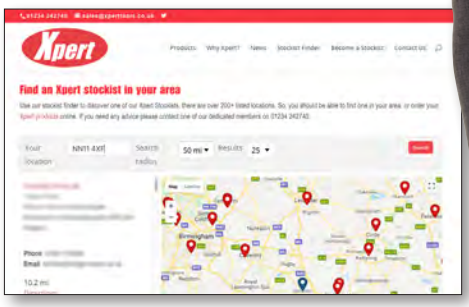

Call 01234 242724 to learn more

9 pc Long Torx Key Set

KENDO® Your Professional Partner

- Durable rust-resistant chrome vanadium steel
- Hardened shafts for maximum strength
- Supplied in an indexed folding case
- Sizes; 1.5, 2, 2.5, 3, 4, 5, 6, 8, 10mm

PART CODE	BOX QTY.
ALK41002	6

9 pc Hex Key Set

KENDO® Your Professional Partner

- Durable rust-resistant chrome vanadium steel
- Hardened shafts for maximum strength
- Various lengths and sizes
- Supplied in an indexed folding case
- Sizes; 1.5, 2, 2.5, 3, 4, 5, 6, 8, 10mm

PART CODE	BOX QTY.
ALK41001	12

T Handle Allen Key Set 8 Piece Metric

IRWIN® TOOLS

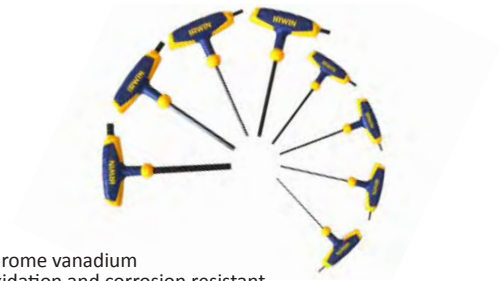

- Chrome vanadium
- Oxidation and corrosion resistant
- Ergonomic design
- Sizes: 2.0, 2.5, 3.0, 4.0, 5.0, 6.0, 8.0, 10mm

PART CODE	BOX QTY.
ALK11771	1

9 pc Ball End Long Hex Key Set

KENDO® Your Professional Partner

- Durable rust-resistant chrome vanadium steel
- Hardened shafts for maximum strength
- Ball end shafts for working at angles up to 25°
- Supplied in an indexed folding case
- Sizes; 1.5, 2, 2.5, 3, 4, 5, 6, 8, 10mm

PART CODE	BOX QTY.
ALK41000	6

Locksmith Multi-Tool

Xpert

- A universal tool that no locksmith should be without
- Helps measure cylinder sizes & spindle sizes
- Allows operation of lock without euro cylinder and handle

1. Spindle sockets (7 & 8mm square)
2. Euro cylinder measure (25-70mm)
3. Cam rotator (simulates cylinder operation)
4. Spindle sizes (4-6mm)

PART CODE	BOX QTY.
SWD10000	1

Ball Ended T Handle Hex Key

FAITHFULL® QUALITY TOOLS

- Comfortable soft-grip
- Made from chrome vanadium for excellent strength and durability
- One short standard hex arm and a long ball ended arm for working at angles
- Ideal for repeated use and when more leverage is required

SIZE	PART CODE	BOX QTY.	SIZE	PART CODE	BOX QTY.
2.0mm	ALK11002	1	5.0mm	ALK11050	1
2.5mm	ALK11025	1	6.0mm	ALK11006	1
3.0mm	ALK11003	1	8.0mm	ALK11080	1
4.0mm	ALK11040	1	10.0mm	ALK11100	1

Lightweight Bar Clamps

- One handed operation
- Can be used as a clamp or separator

150mm	300mm	450mm	600mm	BOX QTY.
BCP10150	BCP10300	BCP10450	BCP10600	1

Engineer's Vice

- 8kg clamping vice
- Clamp jaws open to 135mm
- Cast iron frame

PART CODE	BOX QTY.
EUC10008	1

Quick-grip Bar Clamps

- Quick change system converts clamp to spreader
- Hold load: 135kg
- New feature: swivel jaw with lock allows uneven surfaces to be clamped
- Heavy duty
- Square XP style protective pads safeguards the work surface

150mm	300mm	450mm	600mm	BOX QTY.
IQC10150	IQC10300	IQC10450	IQC10600	1

Xtreme Pressure One Handed Clamp

- Single handed functionality offering a clamping pressure of 250Kg
- A tool-free quick change function allows the jaws to be reversed to perform a spreading action
- Longer length jaws with a unique swivelling action keep constant pressure on uneven surfaces
- They also have a bar rest to allow you to place larger items in the clamping jaws hands-free

150mm	300mm	450mm	600mm	BOX QTY.
IQX10150	IQX10300	IQX10450	IQX10600	1

Winbag Air Wedge Inflatable Fitting & Levelling Tool

The Winbag is a hand operated air cushion that has been designed to assist professionals in the installation or adjustment of windows, doors, household appliances and much, much more.

- Can be used in joints 2-50mm
- 135Kg load capacity per bag
- Won't scratch or damage the project
- Easy to inflate and deflate

PART CODE	BOX QTY.
WINBAG	20

Countersink

- High speed Steel Rose head Chubby 90° included angle countersink
- For countersinking screw holes for flush fitting of screw heads in mild steel, plastics and non-ferrous metals, wood, plywood, MDF and other man made boards
- Can be used in both hand tools and power drills.
- Size: 13mm
- Shank diameter: 6mm

PART CODE	BOX QTY.
CTS10000	1

Metric Tap and Die Set 21 Piece Carbon Steel

Manufactured from high quality C45 carbon steel, these sets are suitable for cleaning and cutting threads in mild steel, aluminium and brass. Each set contains a tap wrench, die holder, screwdriver and a range of metric taps and dies, featuring the most commonly used European threads.

The sets are supplied in a robust plastic storage case.

Includes:

Tap wrench M3-12
25mm Die stock holder
Screwdriver - 8 Metric Taps 3 x 0.5, 4 x 0.7, 5 x 0.8, 6 x 1.0, 7 x 1.0, 8 x 1.25, 10 x 1.5 and 12 x 1.75 mm
Tap $^{1}/_{8}$ inch NPT
8 Metric Dies
Die $^{1}/_{8}$ inch NPT

PART CODE	BOX QTY.
TAD10021	1

Blacksmith Drills HSS M2 Steel

- Ideal for general purpose use in metal and wood and are suitable for use in bench or hand held equipment with a 13mm chuck capacity
- Suitable for use in: alloy steels, carbon steels, cast iron, hardened alloy steels and stainless steels
- Manufactured from M2 HSS with a bright finish and a reduced 12.7mm shank and 150mm overall length

SIZE mm	PART CODE	BOX QTY.	SIZE mm	PART CODE	BOX QTY.
11 x 150	DRB11000	10	17 x 150	DRB17000	10
12 x 150	DRB12000	10	18 x 150	DRB18000	10
13 x 150	DRB13000	10	19 x 150	DRB19000	10
14 x 150	DRB14000	10	20 x 150	DRB20000	10
15 x 150	DRB15000	10	22 x 150	DRB22000	10
16 x 150	DRB16000	10	25 x 150	DRB25000	10

SDS and Drill Bits

- Tungsten carbide tip
- Double flute
- For concrete, masonry, light blocks and stone

NB: Other sizes available on request

SIZE mm	PART CODE	BOX QTY.	SIZE mm	PART CODE	BOX QTY.
6.0 x 210	SDX60210	10	6.0 x 260	SDX60260	10
6.5 x 210	SDX65210	10	6.5 x 260	SDX65260	10

HSS Standard Drill Bits

- Drill tip: 135°
- High quality DIN338 fully ground Titanium Nitride (TiN) coating
- For drilling into; steel, iron, copper, nickel, zinc, sheet metal, aluminium & PVCu

DRILL DIA mm	HOLE SIZE	CUT LENGTH mm	OVERALL LENGTH mm	PART CODE
2.0	M2.5	24	49	XDB2020049
2.5	M3	30	57	XDB2025057
3.0	M3.5	33	61	XDB2030061
3.5	M4	39	70	XDB2035070
4.0	M5	43	75	XDB2040075
4.5	M5	47	80	XDB2045080
5.0	M6	42	86	XDB2050086
6.0	M7	57	93	XDB2060093
7.0	M8	69	109	XDB2070109
8.0	M9	75	117	XDB2080117
10.0	M11	87	133	XDB2100133

MAX RPM	St Steel	FE Iron 55.845	Nonferrous Metals Cu Copper Ni Nickel Zn Zinc	SM Sheet Metal	Al Aluminium 26.982	PVCu Polyvinyl Chloride
≤ø2.0mm	3980	4780	7170	3980	12740	3990
ø2.1-4mm	1990	2390	3590	1990	6370	1990
ø4.1-6mm	1330	1590	2390	1330	4250	1330
ø6.1-8mm	1000	1190	1790	1000	3190	1000
ø8.1-10mm	900	960	1430	900	2650	900
ø10.1-12mm	660	900	1190	660	2120	660
ø12.1-13mm	570	680	1020	570	1820	570

DRILL DIA mm	HOLE SIZE	CUT LENGTH mm	OVERALL LENGTH mm	PART CODE
3.0	M3.5	66	100	XDB1030100
3.5	M4	73	112	XDB1035112
4.0	M5	78	119	XDB1040119
4.5	M5	82	126	XDB1045126
5.0	M6	87	132	XDB1050132
5.5	M6	91	139	XDB1055139
6.0	M7	91	139	XDB1060139
6.5	M7	97	148	XDB1065148
8.0	M9	109	165	XDB1080165
10.0	M11	121	184	XDB1100184

HSS Long Drill Bits

- Drill tip: 135°
- High quality DIN340 fully ground Titanium Nitride (TiN) coating
- For drilling into; steel, iron, copper, nickel, zinc, sheet metal, aluminium & PVCu

MAX RPM	St Steel	FE Iron 55.845	Nonferrous Metals Cu Copper Ni Nickel Zn Zinc	SM Sheet Metal	Al Aluminium 26.982	PVCu Polyvinyl Chloride
≤ø2.0mm	3980	4780	7170	3980	12740	3990
ø2.1-4mm	1990	2390	3590	1990	6370	1990
ø4.1-6mm	1330	1590	2390	1330	4250	1330
ø6.1-8mm	1000	1190	1790	1000	3190	1000
ø8.1-10mm	900	960	1430	900	2650	900
ø10.1-12mm	660	900	1190	660	2120	660
ø12.1-13mm	570	680	1020	570	1820	570

SDS Drill Bits

- Superior quality, for SDS type hammer drills, designed for drilling brick, block, masonary, concrete and granite
- High quality carbide tip for longer life

SIZE mm	PART CODE	BOX QTY.	SIZE mm	PART CODE	BOX QTY.
6.0 x 210	ASSDS060210	10	6.5 x 260	ASSDS065260	10
6.0 x 260	ASSDS060260	10	8.0 x 260	ASSDS080260	10
6.5 x 210	ASSDS065210	10	10.0 x 260	ASSDS100260	10

HSS High Speed Ground Drill Bits

- High quality drill bit for use on metal, wood and plastic
- Manufactured from high quality high speed steel and hardened for superb strength

SIZE mm	PART CODE	BOX QTY.	SIZE mm	PART CODE	BOX QTY.
2.0 x 49	ASHSG020049	10	5.0 x 86	ASHSG050086	10
2.5 x 57	ASHSG025057	10	6.0 x 93	ASHSG060093	10
3.0 x 61	ASHSG030061	10	7.0 x 109	ASHSG070109	10
3.5 x 70	ASHSG035070	10	8.0 x 117	ASHSG080117	10
4.0 x 75	ASHSG040075	10	10.0 x 133	ASHSG100133	10
4.5 x 80	ASHSG045080	10			

HSS Long Drill Bits

- High quality HSS drill bit for drilling deep holes in metal, plastic and wood

SIZE mm	PART CODE	BOX QTY.	SIZE mm	PART CODE	BOX QTY.
3.0 x 100	ASHSS030100	10	5.5 x 139	ASHSS055139	10
3.5 x 112	ASHSS035112	10	6.0 x 139	ASHSS060139	10
4.0 x 119	ASHSS040119	10	6.5 x 148	ASHSS065148	10
4.5 x 126	ASHSS045126	10	8.0 x 165	ASHSS080165	10
5.0 x 132	ASHSS050132	10	10.0 x 184	ASHSS100184	10

Rapierstar – More than superior fasteners and fixings.

For over twenty three years, Rapierstar has led the market in the design development and supply of technically advanced fixings and building maintenance solutions.

All Rapierstar products are designed and manufactured to exacting quality standards. This commitment to quality is further safeguarded within Rapierstar's unique comprehensive in-house test facility.

Rapierstar award winning specialist fixings include STARPVCU carbon steel and corrosion resistant stainless steel window screws – which are specified on many leading PVCu, aluminium and wooden window manufacturing systems, STARFIX plug-free masonry fixings, STARTURN universal timber screws, STARDECK specially developed exterior decking screws, STARPIN and STARNAIL stainless steel polymer headed pins and nails.

Many of the specialist wood and masonry screws feature the patented STARFORM thread, which lowers drive in torque and reduces assembly time – without pre-drilling. Fixings are further enhanced with specialist head styles and superior corrosion resistant materials and coatings.

Latest innovative products include PROSHIELD™, a water repellent environmentally friendly masonry treatment that is quick and easy to apply. It penetrates to provide breathable, invisible protection from damaging water ingress, maintaining masonry appearance whilst reducing maintenance costs.

PROSHIELD™ can improve the thermal efficiency of an exposed dwelling wall on average by 30%. – without expensive and feature changing additions, such as cladding and other intrusive insulation systems.

Other finishes available in yellow pasivated and sstainless teel. Please contact our sales office for more details.

CSR Range
Furniture and Hardware to Reinforced PVCu Profiles

- Countersunk head, self-tapping thread with self-drilling into steel point
- Recess: Phillips No.2
- Typical application: keep to reinforced frame or butt hinge to door sash
- Zinc finish

LENGTH	DIAMETER		BOX QTY.
	3.9mm	4.8mm	
16mm	ASCSR3916Z	-	1000
19mm	ASCSR3919Z	-	1000
25mm	ASCSR3925Z	ASCSR4825Z	1000
32mm	ASCSR3932Z	-	1000
38mm	-	ASCSR4838Z	500
45mm	ASCSR3945Z	ASCSR4845Z	500

CFG Range
Furniture and Hardware to Un-reinforced PVCu Profiles

- Countersunk head, single, deep-thread with gimlet point
- Recess: Phillips No.2
- Typical application: keep to un-reinforced frame or butt hinge to door sash
- Zinc finish

LENGTH	DIAMETER		BOX QTY.
	4.3mm	4.8mm	
16mm	ASCFG4316Z	-	1000
20mm	ASCFG4320Z	-	1000
25mm	ASCFG4325Z	ASCFG4825Z	1000
30mm	ASCFG4330Z	-	1000
38mm	-	ASCFG4838Z	500
40mm	ASCFG4340Z	-	1000
45mm	ASCFG4345Z	-	1000

SSR Range
Friction Hinge Screw to Reinforced PVCu Profile

- Shallow-pan countersunk head, self-tapping thread with self-drilling into steel point
- Recess: Phillips No.2
- Typical application: friction hinge into reinforced frame/sash
- Zinc finish

LENGTH	3.9mm DIAMETER	BOX QTY.
16mm	ASSSR3916Z	1000
19mm	ASSSR3919Z	1000
25mm	ASSSR3925Z	1000
28mm	ASSSR3928Z	1000

SFG Range
Friction Hinge Screw to Un-reinforced PVCu Profile

- Shallow pan countersunk head, fast thread with gimlet point
- Recess: Phillips No.2
- Typical application: friction hinge into un-reinforced frame/sash
- Zinc finish

LENGTH/ DIAMETER	4.3mm DIAMETER	BOX QTY.
16mm	ASSFG4316Z	1000
20mm	ASSFG4320Z	1000
25mm	ASSFG4325Z	1000

BSR Range PVC Cill Screw

- Wafer head, self-tapping thread with self-drilling into steel point
- Recess: Phillips No.2
- Typical application: cill retention
- Zinc finish

LENGTH	4.2mm DIAMETER	BOX QTY.
42mm	ASBSR4242Z	500
55mm	ASBSR4255Z	500
65mm	ASBSR4265Z	500

WSR Range PVC / Baypole Screw

- Wafer head, self-tapping thread with self-drilling into steel point
- Recess: Phillips No.2
- Typical application: baypole jack screw
- Zinc finish

LENGTH	4.8mm DIAMETER	BOX QTY.
50mm	ASWSR4850Z	200
60mm	ASWSR4860Z	200
70mm	ASWSR4870Z	200
80mm	ASWSR4880Z	200
100mm	ASWSR48100Z	200

BTP Range Timber Decking Screw (Star Deck)

- No pre-drill or countersink needed
- Superior holding power
- 50% less drive-in torque required - the patented StarForm™ thread lowers torque and reduces wood splitting
- High tech StarCoat™ protection extends corrosion resistance in treated timber and the toughest environments
- Recess: T20
- Free StarDrive™ bit included
- Green finish

LENGTH	4.2mm DIAMETER	BOX QTY.
65mm	ASBTP4265G	200
75mm	ASBTP4275G	200

CPF Range Universal Woodscrew (Star Turn)

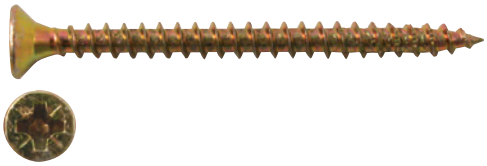

- Countersunk head, single, deep-thread with gimlet point
- Recess: Phillips No.2
- No pre-drilling required
- Yellow finish

LENGTH	DIAMETER		BOX QTY.
	4.0mm	5.0mm	
25mm	ASCC4025Y	ASCC5025Y	200
30mm	ASCC4030Y	-	200
40mm	ASCC4040Y	ASCC5040Y	200
50mm	ASCC4050Y	ASCC5050Y	200
60mm	ASCC4060Y	ASCC5060Y	200
70mm	ASCC4070Y	ASCC5070Y	200
80mm	-	ASCC5080Y	200
90mm	-	ASCC5090Y	100

FFT StarFix Direct Frame Anchor

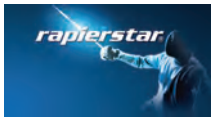

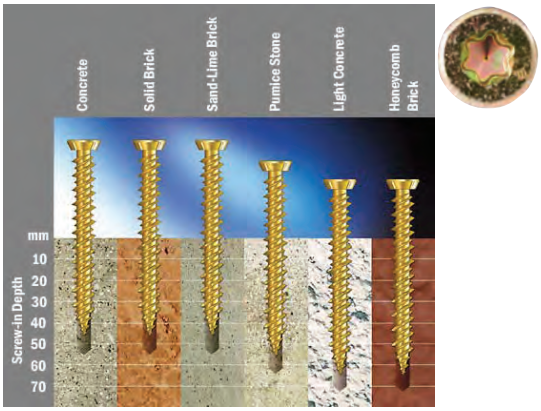

- No plug concrete, masonry, brick screw
- ST30 recess
- High strength in temporary fastener applications - leaves no steel parts behind to corrode after removal
- Yellow finish

LENGTH	7.5mm DIAMETER	BOX QTY.
82mm	ASFFT75082	100
102mm	ASFFT75102	100
112mm	ASFFT75112	100
122mm	ASFFT75122	100
142mm	ASFFT75142	100
152mm	ASFFT75152	100

Universal Fixing Cleats

- Universal fixing cleat compatible with most PVC systems
- Manufactured from galvanised steel
- 1.2mm thick, no frame deduction required
- Twist fit for speed of installation with screw fix detail (202mm)
- One size works with 50, 75 and 100mm cavities
- Lip/claw height 5.2mm

PART CODE	BOX QTY.
FCT10003	500

The Snapper®

- Fixing device that enables you to install a fully glazed window in 5 minutes
- Fits between frame and masonry
- No drilling
- No plastering
- No de-glazing on site

What is a 'Snapper'?
- A stainless spring-steel fixing with angled serrated tongues, which is fixed to the frame itself during manufacture
- It can be used with PVCu, timber or aluminium frames
- Drilling through the frame into the masonry is not necessary, the window is installed fully glazed
- Snapper will bite into all building materials

How does a 'Snapper' work?
- Located on the frame, the serrated tongues allow the frame to be pushed into place while acting as a reversed anchor that resists movement in the opposite direction
- Fitting the window takes 5 minutes
- Seal in the normal way then move on to the next installation

What about expansion?
- The Snapper is a double spring and will allow expansion and contraction without releasing its grip on the surrounding material
- The Snapper will adjust for frame-to-masonry tolerances of 1mm to 15mm

How strong is 'Snapper'?
- Made of austenitic stainless spring steel to BS 5770 compression and hard rolled with a tensile strength of approx. 80 tonnes per sq. in.
- The Snapper will survive a lateral pull on a frame of over 5 tonnes

PART CODE	BOX QTY.
SNP10000	100

33 piece Screwdriver Bit Set

- Professional quality 33 piece bit set
- Hardened premium steel ensures long life
- Every size & type of 25mm bits in common use
- Includes bit holder & case

PART CODE	BOX QTY.
SDBSB209	1

Pozi (PZD) Screwdriver Tips

- Tip Length: 50mm
- ¼ inch hex shank
- Chrome vanadium
- Pozi head size: No.1, No.2 and No.3

SIZE	25mm	50mm	PACK QTY.
No. 1	SDBSB206	-	10
No. 2	SDBSB207	SDB22050PH	10
No. 3	SDBSB208	-	10

Torx Tip T30

- Chrome vanadium
- ¼ inch drive
- Length: 25mm and 75mm
- Fits into an STD chuck

25mm	75mm	PACK QTY.
SDB530250	SDB530700	10

Phillips Cr–V Screwdriver Bits

- ¼ inch hex chrome vanadium for power screwdrivers
- Long life

25mm	BOX QTY.
SDBSB204	1

Slotted Screwdriver Bits

- ¼ inch hex for power screwdrivers
- Long life

SIZE	25mm	BOX QTY.
6	SDBSB201	1

PH2 90mm Screwdriver Tip

- Length: 90mm
- ¼ inch hex
- Phillips PH2
- Great for hard-to-reach places

90mm	BOX QTY.
SDB22090PH	6

4 Socket Cable Reel

- Fast rewind cable reel
- Max load 13Amps (300W) fully unwound
- Integral handle and rotating winding knob
- Dual drum technology
- Patented British design for quick and tangle-free winding
- 4 shuttered sockets

10m	BOX QTY.
EXC100410	1

Pozi (PZD) Gold Finish Screwdriver Tips

- Length: 25mm
- ¼ inch hex for power screwdrivers
- Titanium and diamond coated s2 steel for grip and extended service life

25mm	25mm No.2	BOX QTY.
SDB22025D	SDB32025T	1

T30 Torx Gold Finish Screwdriver Bits

- Length: 25mm
- ¼ inch hex for power screwdrivers
- Titanium and diamond coated s2 steel for grip and extended service life

25mm	25MM PH2	BOX QTY.
SDB394983	SDB22025D	1

Phillips Gold Finish Screwdriver Bits

- 3 year guarantee
- Long life
- ¼" hex for power screwdrivers

SIZE	25mm	BOX QTY.
No. 3	SDB23025T	1

45º Offset Screwdriver Attachment

- Length: 130mm
- Used for screwing in confined areas
- Use with manual or powered drivers

PART CODE	BOX QTY.
SDB10002	1

Magnetic Tip Holder

- Holder length: 60mm
- ¼ inch hex shank

PART CODE	BOX QTY.
SDB90000	1

Hilka Damaged Screw Remover

PART CODE	BOX QTY.
SDB10000	1

- Removes broken or damaged screws and bolts
- Fully heat treated alloy steel
- Packed in handy carrying case

Hilka 3PC Nail Punch

PART CODE	BOX QTY.
NPS10000	1

- Drop forged heat treated steel
- Knurled body for sure grip
- Size: 0.8, 1.5 and 2.5mm

FAITHFULL QUALITY TOOLS Pozi Screwdriver

- High quality, hardened and tempered chrome vanadium steel blades
- Full size bi-material soft-grip handles for maximum user comfort and a firm non-slip grip
- Each handle is colour coded with a drive icon displayed on the end for easy identification

PZ1 x 75mm	PZ2 x 100mm	PZ3 x 150mm	BOX QTY.
SDRPZ1075	SDRPZ02100	SDRPZ03175	1

FAITHFULL QUALITY TOOLS Phillips Screwdriver

- High quality, hardened and tempered chrome vanadium steel blades
- Full size bi-material soft-grip handles for maximum user comfort and a firm non-slip grip
- Each handle is colour coded with a drive icon displayed on the end for easy identification

PH1 x 75mm	PH2 x 100mm	PH2 x 150mm	BOX QTY.
SDRPH01075	SDRPH02100	SDRPH02150	1

FAITHFULL QUALITY TOOLS Flared Slotted Screwdriver

- High quality, hardened and tempered chrome vanadium steel blades
- Full size bi-material soft-grip handles for maximum user comfort and a firm non-slip grip
- Each handle is colour coded with a drive icon displayed on the end for easy identification

SIZE mm	PART CODE	BOX QTY.	SIZE mm	PART CODE	BOX QTY.
4.0 x 75	SDR50475	1	10.0 x 200	SDR10200	1
5.5 x 100	SDR55100	1	10.0 x 250	SDR10250	1
6.5 x 125	SDR65125	1	12.0 x 300	SDR12300	1

Hilka VDE Screwdriver Soft Grip 8 Piece Set

- Set of 8 supplied in a plastic carry case
- Manufactured to EN 60900:2004 and individually tested at 10,000V before leaving the factory, guaranteeing a safe working limit of up to 1,000V
- Two component, slip-resistant, soft-grip handles with high quality chrome vanadium steel blades tempered and hardened for high torque and strength
- For use on terminal blocks, control cabinets, switches relay and sockets
- Includes:
  3 x Slotted: 2.5 x 75mm, 5.5 x 125mm, and 6.5 x 150mm
  3 x Pozi: PZ0 x 60mm, PZ1 x 80mm, and PZ2 x 100mm
  1 x Phillips: PH1 x 80mm
  1 x Mains Tester 140mm

PART CODE	BOX QTY.
SDS10008	1

Socket Wrench Set 25 Piece

FAITHFULL QUALITY TOOLS

- A 25 piece $^{3}/_{8}$ inch square drive chrome vanadium steel socket set presented in sturdy professional quality storage case
- The set includes a selection of hexagonal sockets and popular accessories, and features a 72 tooth smooth action ratchet with a quick-release mechanism and soft-grip handle
- Includes:
  - 18 x Metric Hexagon Sockets: 6, 7, 8, 9, 10, 11, 12, 13, 14, 15, 16, 17, 18, 19, 20, 21, 22, 24mm
  - 1 x Smooth Action Ratchet
  - 2 x Deep Spark Plug Sockets: 16mm and 21mm
  - 2 x Extension Bars: 75mm and 250mm
  - 1 x Universal Joint Sliding 'T' Bar
  - 1 x $^{3}/_{8}$ inch to $^{1}/_{2}$ inch Adaptor

PART CODE	BOX QTY.
SWS10025	1

$^{1}/_{4}$ & $^{3}/_{8}$ Socket Set 34 Piece

BAHCO

- Square drive
- Chrome vanadium
- DIN3120 ISO1174 Oil and temperature resistant
- Polypropylene case Includes:
  - 1 each $^{3}/_{8}$ inch 6-point dynamic drive sockets 10, 11, 2, 13, 14, 15, 16,17, 18, 19, 20 and 22mm
  - 1 each $^{3}/_{8}$ inch extension bars 3in and 6in
  - 1 x $^{3}/_{8}$ inch universal joint
  - 1 x $^{3}/_{8}$ inch x $^{1}/_{4}$ in bit holder
  - 1 each $^{3}/_{8}$ inch spark plug sockets 6-point 16mm ($^{5}/_{8}$ inch), 21mm ($^{13}/_{16}$ inch)
  - 1 x $^{1}/_{4}$ inch spinner handle
  - 1 x $^{1}/_{4}$ inch x $^{1}/_{4}$ inch bit holder
  - 1 each $^{1}/_{4}$ inch bits flat 4, 5.5, 7 mm
  - 1 each $^{1}/_{4}$ inch bits Phillips no. 1, 2, 3 and 4
  - 1 each $^{1}/_{4}$ inch bits hex 3, 4, 5, 6, 7, 8mm
  - 1 x $^{3}/_{8}$ inch ratchet handle 54 teeth

PART CODE	BOX QTY.
BAH5330	1

FatMax Spanner Set 13 Piece

STANLEY

- Metric combination spanner set
- Nickel chrome plated
- Corrosion protection
- Maxi drive ring ends
- Reusable plastic rack
- Sizes: 8, 9, 10, 11, 12, 13, 14, 15, 16, 17, 18, 19, 20mm

PART CODE	BOX QTY.
SPS10000	1

Combination Spanner CV 9 Piece, 6 - 19mm

BlueSpot

- Professional high quality combination spanners
- Forged from chrome vanadium steel
- Hardened and tempered
- Satin chrome plated for corrosion protection
- Manufactured to DIN 3113,
- Broached jaws and rings to ensure a consistent tolerance and guaranteed accurate fit
- Both the jaw and ring are set at a 15° offset for ease of use in awkward positions
- Includes: 6, 8, 10, 11, 12, 13, 14, 17, 19mm

PART CODE	BOX QTY.
SPS10009	1

Hi-Vis Tape Measures

- Comfortable contoured shape
- Secure double-riveted wraparound tips
- Clear metric and imperial graduations with joist centre marks every 16”
- Includes belt clip and hand strap

5m	BOX QTY.
MTP595750	1

Measure Mate

- Rugged rubber grip case
- Blade lock, brake and automatic return
- Three rivet tip with wraparound reinforcement
- EEC Class II accuracy

8m	BOX QTY.
MTP675126	1

Tylon™ Tape Measures - Metric / Imperial

- Tylon™ blade coating gives greater durability/wear resistance than lacquer
- Matt finish blade reduces glare/reflection for easy reading
- Compact and ergonomic bi material case for comfort and ease of use
- Belt clip for ease of storage
- Tru zero hook moves to compensate for accurate inside and outside measurements

5m	8m	BOX QTY.
MTP1260134	MTP1260132	12

Tape Measure

- Rustproof nylon blade
- 3 rivet reinforced end hook
- Blade dimentions: 5m x 25mm

5m	BOX QTY.
ROU432205	1

Tape Measure

- Matt finish blade reduces glare/reflection for easy reading
- Quick blade hold & break lock
- Belt clip for ease of storage
- Ruler on both sides for easy measuring feet, inches, mm, cm & m
- Double ended hook

5m	8m	BOX QTY.
MTP50005	MTP50008	1

3 pc Chalk Line Reel Set

- Highly durable reel and chalk for professional use
- Strong plastic casing
- Claw and hook end for a secure hold
- Line length: 30m

PART CODE	BOX QTY.
CLK41000	10

Adjustable Bevel

KENDO® Your Professional Partner

- Polished hardwood stock
- Solid brass end cap
- Adjustable wing nut to change and fix the angle easily
- Blued steel blade for rust protection

200mm	BOX QTY.
BVP41200	18

Carpenter's Square

Hilka

- Tough hardwood stocks
- Corrosion resistant precision-milled blued steel blade
- 3 rivet fixed for greater strength

230mm	BOX QTY.
CSQ10230	12

Combination Square

KENDO® Your Professional Partner

- Made from rust-resistant stainless steel
- Die-cast stock
- Permanent etched graduations
- Imperial and metric measurements

300mm	BOX QTY.
SQC41300	10

Steel Framing Square

KENDO® Your Professional Partner

- Carbon steel construction
- Permanent etched graduations
- Displays imperial and metric units
- Dimensions: 400 x 600mm

400 x 600mm	BOX QTY.
SFS41000	1

Aluminium Rule

FAITHFULL® QUALITY TOOLS

- Cast aluminium
- Clearly marked metric and imperial graduations

300mm	BOX QTY.
RUL10000	1

Scale Triangular Rule

FAITHFULL® QUALITY TOOLS

- Cast aluminium scale rule with 300mm triangular body
- 6 scales for accurate drawing: 1:20, 1:25, 1:50, 1:75, 1:100 and 1:125

300mm	BOX QTY.
RUL10001	1

Bevel Protractor

- Length: 480mm
- Measuring range: 10-170° and half angle 5-85°
- Used for internal or external angles

480mm	BOX QTY.
BVP10000	1

Digital Vernier

- Length: 150mm
- 4 function measurement: internal, external, depth and step
- Zero setting at any position

150mm	BOX QTY.
VER10000	1

Winklefix Angle Finder

- Engineered in Germany
- Measuring range: 0-180°
- Display graduations: 0.05
- Accuracy: 0.25°

430mm	600mm	BOX QTY.
ANG10430	ANG10600	1

Winkletronic Easy Angle Finder

- Engineered in Germany
- High quality digital display
- Measuring range: 0-200°
- Resolution: 0.1
- Accuracy: 0.1°
- Length: 400mm
- Comes with protective case

400mm	BOX QTY.
DAFE10400	1

Winkletronic Angle Finder

- Engineered in Germany
- High quality digital display
- Measuring range: 0-180°
- Display graduations: 0.05
- Accuracy: 0.1°s

450mm	600mm	BOX QTY.
DAF10450	DAF10600	1

Messfix Compact Measuring Stick

- Engineered in Germany
- High quality, round housing
- Measuring range: 3m 0.6-3.04, 5m 0.91-5.01
- Comes with protective case

3m	5m	BOX QTY.
TMS10003	TMS10005	1

Micro Therma 3 Thermometer

- Measures temperatures from -200 to 1372°C with a 0.1°C resolution
- Easy-to-read, 4½ digit dual LCD display with open circuit, low battery and hold indication
- Built-in microprocessor automatically comes on self-diagnostic recalibration
- Auto-power off facility maximises battery life
- Includes a surface probe

PART CODE	BOX QTY.
THM3003	1

FatMax Beam Spirit Level

- Beam Magnetic Level provides ultimate strength and performance
- Fitted with solid block acrylic vials that have been machined to exacting tolerances to ensure that the movement of the bubble is smooth and comes to rest quickly
- Small magnifying area in centre makes reading the position of the vial easier
- Rubber end caps protect the level against damage if dropped
- Curved body allows the level to be used for gradients on drainage and pipe work

600mm	1200mm	2000mm	BOX QTY.
LEV10600	LEV11200	LEV12000	1

Aluminium Level

- Three vials at 45°, 90° and 180° angles
- Rust-free, lightweight but strong powder-coated aluminium i-beam section
- Accuracy 1.0mm/m
- Drop-proof end guards
- Hanging hooks for easy storage
- Choose from two lengths: 600 and 1200mm

600mm	1200mm	BOX QTY.
LEV40600	LEV41200	1

Thickness Laser Gauge

- Uses a laser to measure thickness of glass and air gap without removing glass

PART CODE	BOX QTY.
GTG40000	1

Glass Thickness Measure

- Cast steel body
- Imperial and metric printed on both sides of the rule for easy reading
- Jaws open to 104mm wide and 155mm deep
- Great tool to measure glass sealed units without the need to remove it from the door or window
- Comes with protective case

PART CODE	BOX QTY.
GTG20000	10

Digital Angle Finder

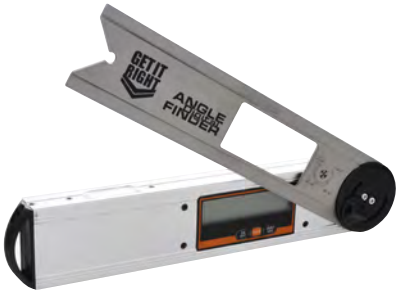

- Length: 320mm
- Measuring range: 0-225°
- Accurate within 0.05°
- Digital display with hold facility

320mm	BOX QTY.
DAF10000	25

STANLEY Seam Roller

- Tough roller attached to a single arm frame

PART CODE	BOX QTY.
SER028810	1

FAITHFULL QUALITY TOOLS Soft Grip Plastering Trowel

- Size: 280mm
- 8 rivet fixing to ensure stability and a degree of flexibility

280mm	BOX QTY.
TRP100280	1

FAITHFULL QUALITY TOOLS Soft Grip Brick Trowel

- Large, flexible 250mm long high quality carbon steel blade
- Soft-grip handles for user comfort

250mm	BOX QTY.
TRPB100250	1

FAITHFULL QUALITY TOOLS Soft Grip Pointing Trowel

- 150mm long high quality carbon steel blade
- Soft-grip handles for user comfort

150mm	BOX QTY.
TRP100150	1

FAITHFULL QUALITY TOOLS 3 Gallon / 14L Bucket

- General purpose bucket
- Fitted with a strong wire handle and plastic carry grip

14 LITRE	BOX QTY.
BUC10000	1

FAITHFULL QUALITY TOOLS Polyethylene Bucket

- Ideal for use around the garden, home, building site, farm or stables
- Lightweight heavy duty polyethylene flexible tub
- Super strong comfortable handles
- Holds solids and fluids
- Environmentally friendly - made from 100% recycled material and 100% recyclable

15 LITRE	28 LITRE	42 LITRE	BOX QTY.
BUC10015	BUC10028	BUC10042	1

FatMax Cantilever Professional Toolbox

STANLEY

- Cantilevered interior sliding tray makes tool access and inventory quick and simple
- Easily organise small parts & tools in a series of different-sized removable cups
- Spacious, long main compartment comfortably accommodates most hand tools
- Tough water- and dust-resistant case affords equipment top-level protection
- Dimensions: 660 x 276 x 269mm

PART CODE	BOX QTY.
TBX192258	1

Open Tote Toolbag with Rigid Base

STANLEY

- Secure, rigid and waterproof base
- Comes with a variety of internal and external pockets to protect valuables from dust and water spills
- Large open top allows for easy access as well as more space for larger tools
- Dimensions: 25 x 59 x 29cm

PART CODE	BOX QTY.
TBX170319	1

Toolbox with Organisers

KENDO® Your Professional Partner

- One removable plastic organiser tray
- Sturdy plastic construction with generous metal handle for comfortable carrying
- Storage compartment in lid for safely stowing small parts like screws and nails etc.
- Heavy-duty sturdy metal latches
- Dimensions: 656 x 285 x 270mm

PART CODE	BOX QTY.
KTB10001	1

Mobile Wheeled Toolbox

KENDO® Your Professional Partner

- Two separate storage compartments in the lid for stowing small parts likes screws, bolts and nails etc.
- Lid can be lifted off entirely for maximum access
- Internal removable organiser tray
- Large main compartment with plenty of room to store bigger tools and equipment
- Retractable metal pull handle
- Road-tested wheels
- Dimensions: 600 x 300 x 390mm

PART CODE	BOX QTY.
KTB10000	1

Latex Gloves

- Size: large
- Disposable
- Non-sterile
- Powder free

MEDIUM	LARGE	BOX QTY.
LG/D/M	LG/D/L	100

Nitrile Gloves

- 1 size
- Foam nitrile coated 13 gauge seamless nylon glove
- Open back that keeps hand cool in warm working environments
- Foam surface offers better grip when oil is present

PART CODE	BOX QTY.
GLS10003	1

MaxiFlex ELITE™ ATG MaxiFlex Cut -resistant Gloves

- Cut-resistant palm coating
- Meets EN 388 safety standard to achieve level 3 cut-resistance
- Innovative performance fibres in the glove liner deliver excellent cut protection
- Micro-foam nitrile coating delivers market-leading 360° breathability & optimised grip

SIZE 8	SIZE 9	BOX QTY.
GLS31008	GLS31009	1

DuPont™ KEVLAR® Kevlar Gloves

- 1 size
- Medium duty
- Cut proof

PART CODE	BOX QTY.
GLS10001	1

MaxiDry® ATG MaxiFlex Dry Oil-resistant Safety Gloves

- Ideal in damp and oily working conditions
- Nitrile coating on ¾ glove protects hands from water, oil and grease
- Offers top-level abrasion resistance, plus good resistance to tearing – tested to EN 388

SIZE 9	SIZE 10	BOX QTY.
GLS30009	GLS30010	1

MaxiFlex® ULTIMATE™ ATG MaxiFlex Ultimate Grip Handling Gloves

- Perfect for precise and controlled dry handling jobs
- Nitrile palm coating delivers assured grip on all kinds of materials
- Supple knitted nylon/spandex liner reduces hand fatigue, supports ease of movement and unhindered dexterity

SIZE 9	SIZE 10	BOX QTY.
GLS32009	GLS32010	1

DuPont™ KEVLAR® Kevlar Sleeves 14”

- Protects arms when handling glass
- Ideal protection against cuts from glass
- These are sold in singles
- Size: 14” long

PART CODE	BOX QTY.
SLV10000	1

DuPont™ KEVLAR® Kevlar Wrist Gauntlet

- Kevlar wrist guards are superb quality providing maximum comfort durability and protection
- BSEN388 rating 4 - 5- 4 - 2.

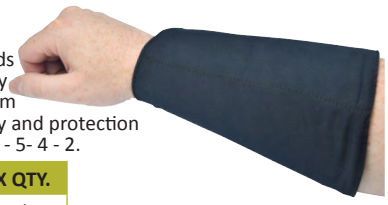

PART CODE	BOX QTY.
WPT10000	1 pair

Compact Ear Defenders

- Lightweight
- Flexible head band
- SNR 22dB

PART CODE	BOX QTY.
EAR10022C	1

Ear Defenders

- Compact folding ear defenders
- SNR 30dB

PART CODE	BOX QTY.
EAR10030	1

Safety Glasses

- Impact and scratch resistant
- Curve polycarbonate with UV protection
- Wrap around for maximum visibility and eye protection

PART CODE	BOX QTY.
SFG10000	1

Safety Glasses

- Impact and scratch resistant
- Lightweight modern frame with extendable and pivoted side arms
- Single piece wraparound lens for superb panoramic vision

PART CODE	BOX QTY.
SFG10001	1

Dust Mask

- Disposable face masks
- Protects against non-toxic dusts and powders

PART CODE	BOX QTY.
DUS10000	50

First Aid Kit 1-100 Person BS Approved

Contains:
- 1x Guidance Leaflet
- 6 x Medium Sterile Dressings
- 2 x Large Sterile Dressings
- 3 x Triangular Bandages
- 12 x Safety Pins
- 3 x Eye Pad Dressings
- 60 x Adhesive Dressings
- 30 x Alcohol Free Wipes
- 1 x Adhesive Tape
- 9 x Nitrile Gloves (Pairs)
- 3 x Finger Dressings
- 1 x Resuscitation Face Shield
- 2 x Foil Blankets
- 2 x Hydrogel Burns Dressings
- 1 x Shears
- 2 x Conforming Bandages

- Includes sufficient content to safeguard 1-100 persons in a workplace
- Approved by the British Standards
- The size and content of the kit should always be determined following a risk assessment of your work place

PART CODE	BOX QTY.
FAK/100P	1

High Visibility Waistcoat

- Polyester
- Conforms to EN471 class 2
- Sizes: M 36”-39”, L 39”-42”, XL 42”-46”

M	L	XL	BOX QTY.
HIV20000	HIV20001	HIV20002	1

Safety Hard Hat

- Lightweight
- Adjustable harness
- CE marked, Conforms to EN397
- Colours: green, blue, white, yellow

COLOUR	PART CODE	BOX QTY.	COLOUR	PART CODE	BOX QTY.
Green	HAT1000G	10	White	HAT1000W	10
Blue	HAT1000B	10	Yellow	HAT1000Y	10

High Visibility Jacket

- 2-tone polyester
- Conforms to EN471 class 3
- Stitched and taped waterproof seams
- Quilted lining
- Fold away hood
- Heavy duty two way zip
- Sizes: M 36”-39”, L 39”-42”, XL 42”-46”

M	L	XL	BOX QTY.
HIV30000	HIV30001	HIV30002	1

Wind Up Torch

- Dual function
- 1 Led/3 Led, 1 min winding for 30 min power
- Bright light
- No batteries required
- Fold away generator handle

PART CODE	BOX QTY.
TOR10001	1

High Visibility Polo Shirt

- Polyester
- Conforms to EN471 class 2
- Sizes: M 36”-39”, L 39”-42”, XL 42”-46”

M	L	XL	BOX QTY.
HIV10000	HIV10001	HIV10002	1

Head Torch

- Tiltable head
- Ultra bright white light
- 6 Led’s
- Long distance beam
- Requires x3 AA batteries (not included)

PART CODE	BOX QTY.
TOR10000	1

Crimp Terminal Pack

- 82 piece crimp set in case:
  - ring
  - fork
  - butt
  - male
  - female
- Colour coded:
  - red: 0.44 - 1mm
  - blue: 1.1 - 2.5mm
  - yellow: 2.6 - 6.5mm

PART CODE	BOX QTY.
CRP10000	1

Cable Ties

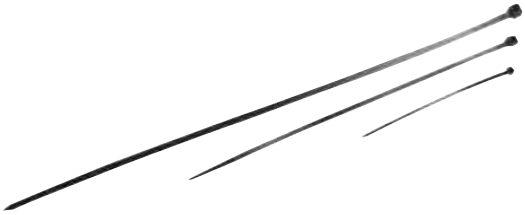

- Assorted 650 pack black and white cable ties
- Sizes:
  - 100 x 2.5mm
  - 200 x 3.6mm
  - 300 x 4.8mm

PART CODE	BOX QTY.
CAB10001	1

Adjustable Roller Stand

- Heavy duty base
- Capacity: 60kg
- Adjustable height: 673 - 1070mm

PART CODE	BOX QTY.
RSD10001	1

Five Roller Stand

- Heavy duty base
- Capacity: 60kg
- Adjustable height: 673 - 1016mm

PART CODE	BOX QTY.
RSD10005	1

Bungee Cord

- 6 pack
- Strong steel hooks with rubber coating
- Thickness: 8mm

400mm	600mm	900mm	BOX QTY.
BUC10400	BUC10600	BUC10900	1

4 Piece Ratchet Strap

- Heavy duty webbing
- Quick release
- Size: 4m x 25mm
- Max load: 500kg

PART CODE	BOX QTY.
RAT10014	1

Heavy Duty Ratchet Strap

- Heavy duty webbing
- Double J hook ends
- Quick release
- Size: 8m x 50mm
- Max load: 4500kg

PART CODE	BOX QTY.
RAT10008	1

Heavy Duty Sack Truck

- Pneumatic tread tyres and hand guards
- Toe plate: 360 x 190mm
- Height: 1180mm
- Max load: 250kg

PART CODE	BOX QTY.
SACKTRUCK	1

Step Up Platform

- Dimensions: L1000mm x W300mm x H520mm
- Conforms to EN131
- Working load: 150kg
- Fitted with 2 leg locks
- Antislip feet

PART CODE	BOX QTY.
SUP10001	1

Step Up Platform

- Strong, lightweight aluminium platform with antislip feet
- Legs secured by 2 sprung catches
- 150kg capacity
- Certified to BS2037
- Platform dimensions: L x 600mm W 300mm x H500mm

PART CODE	BOX QTY.
SUP10000	1

Telescopic Ladder

- Maximum height: 3.8m
- Ideal for surveying
- Will fit in most car boots

PART CODE	BOX QTY.
TSL13800	1

Junior Saw Horse Twin Pack

- All plastic construction with non-slip rubber inserts in the top to hold project in position
- Non-slip rubber feet for added stability and safety
- Fold flat for easy transportation and easy storage
- Max Load Limit: 340kg per pair
- Dimensions:
  L 571mm x W 48mm x H 820mm

PART CODE	BOX QTY.
STA170355	1

Telescopic Scaffold Tower + Toe Boards, Ideal for Glazing Conservatories

- Unique patented telescopic operation which means it's easy to transport, store and erect
- Offers a safer, more efficient and lower-cost alternative to fixed scaffolding
- Meets requirements of the Work at Height Regulations of 2005
- Complies with PASMA's recommendations relating to safe method of tower build
- Seven different platform heights: 0.33 to 2.00 metres (0.33/0.61/1.00 /1.25 /1.50 /1.75/2.00)
  Working heights from (2.30 to 4.00 metres) with a large folding aluminium work platform (1.4m x 0.7m) with climb through hatch
- Fully erected in under 3 mins
- Can operate as a podium with low level fixed height options: 33cms & 61cms
- Comprises only two parts: tower and platform
- Integral stabilising legs with 5 optional positions & lockable castors
- Integral telescopic hand and knee rails and integral platform stabilisers

PART CODE	BOX QTY.
TT00002	1

Fibreglass Swing Back Steps

- Treads from 4 to 8
- Maximum height upto 2.15m

NO. OF TREADS	OPEN HEIGHT	CLOSED LENGTH	BASE WIDTH	BASE SPREAD	PART CODE
4	1.04m	1.17m	0.48m	0.85m	STE10004
5	1.32m	1.47m	0.52m	1.05m	STE10005
6	1.60m	1.78m	0.55m	1.25m	STE10006
7	1.87m	2.07m	0.59m	1.45m	STE10007
8	2.15m	2.38m	0.63m	1.64m	STE10008

We can source high quality machinery and spares.

Furniture Cropper

Furniture Cropper

Bead / Mitre Saw

Drainage Router

Acca XL Fabricating Bench

Profile Stacking Trolley

We can source from many suppliers listed here, if there is something you require please contact our sales team who will be happy to help.

Available as a special order only and delivered direct anywhere in the UK

Image kindly supplied by Firmfix Door & Windows

Bow Canopies

- Manufactured in strong G.R.P.
- Suitable for openings between 1500mm and 3400mm
- Hollow or foam filled
- Finishes: 3 shades of white, chocolate brown, oak and rosewood
- Cuts fitting time to a minimum and can be completed by an installer, eliminating lead work and plaster ceilings etc.

BOW SIZE	DIMENSIONS (mm)							
	A	B	C	1D	2D	E	F	H
1800 (6ft)	250	2360	300	1900	1500	256	200	175
2400 (8ft)	300	2830	300	2500	1900	390	250	310
2800 (10ft)	310	3150	300	2800	2500	460	260	360
3400 (12ft)	330	3730	300	3400	2800	590	280	490

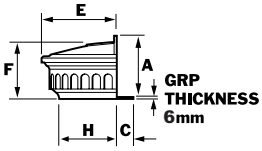

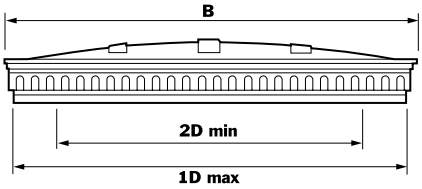

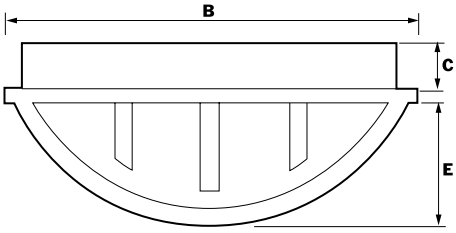

Bow Window Base Units

- Designed to work with the bow canopy
- MK1 – manufactured in strong G.R.P. (standard)
- MK2 – fully moulded internal and external G.R.P. skin with integrated gallows bracket (fully bonded)
- Finishes: 3 shades of white, chocolate brown, oak and rosewood
- Replacement GRP brackets available (see page 314, no. BRG11)

MODEL SIZE & TYPE	BRACKETS	DIMENSIONS (mm)						
		A	B	C	D	E	F	G
MK1 GRP BASE UNIT (STANDARD)								
1800 (6ft)	1	2130	210	150	330	50	530	20
2400 (8ft)	1	2440	370	230	330	50	650	20
2800 (10ft)	2	2850	340	230	330	50	650	20
MK2 GRP COVERED BASE UNIT (FULLY BONDED)								
1800 (6ft)	1	2180	30	150	330	40	510	
2400 (8ft)	1	2670	30	230	330	40	660	

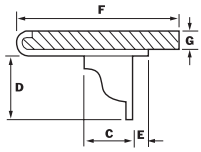

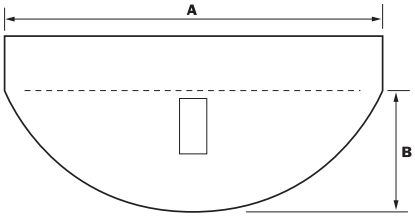

Available as a special order only and delivered direct anywhere in the UK

Berkley

- Mono pitched canopy with traditional clay-tile effect in a choice of colours, with close boarded gable and soffit detailing
- Includes GRP brackets (BRG7 shown, see page 470 for details)
- Available in 1250, 1410 and 1800mm overall widths

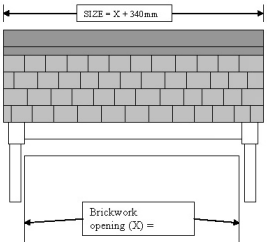

Cheltenham 880

- Traditional canopy with clay tile design in a choice of terracotta or slate-grey finish
- Fully detailed grained soffit and fascia. Includes GRP brackets
- Shown with with open front option with terracotta tiles and GRP brackets (BRG6, see page 470 for details)
- Available in 1520, 1935 and 2335mm overall widths

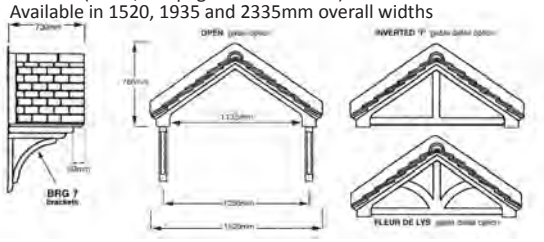

Berkley Extended

- Mono pitched canopy with traditional clay-tile effect in a choice of colours, with close boarded gable and soffit detailing
- Includes GRP brackets (BRG7 shown, see page 470 for details)
- Up to 4200mm available widths

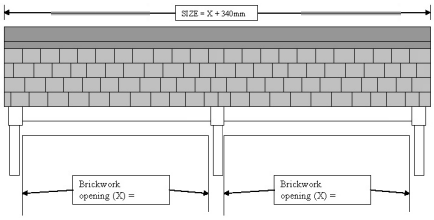

Elsdon

- Clay tiled effect door canopy with a flat fascia and ceiling
- Supplied without brackets
- Can be fitted with corbel brackets BRG4, BRG5 or BRG11 (see page 470 for details)
- Tiles available in terracotta or grey colours
- Choice of white, brown, oak or rosewood underside

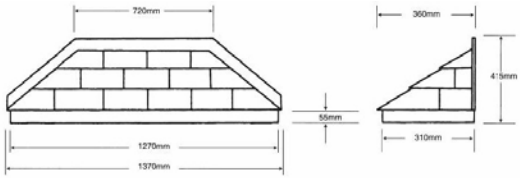

Available as a special order only and delivered direct anywhere in the UK

Ripley

- Flat topped lead look canopy with scalloped edge detail, smooth white fascia incorporating period detailing
- Available in white, brown, oak or rosewood
- Includes GRP corbels (BRG8 shown, see page 470 for details)

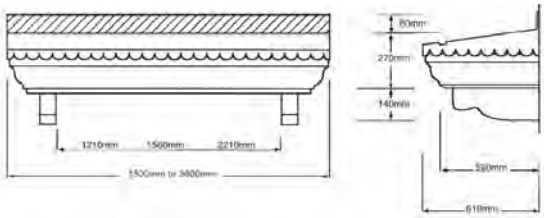

Rockingham

- Elegant Victorian style door canopy in a smooth finish incorporating fully moulded brackets
- Also available without brackets
- Lead look top optional
- Available in white, brown, oak or rosewood

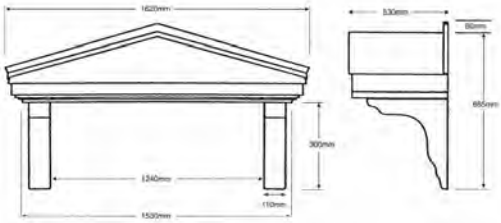

Tamworth

- A simple monopitch canopy available to any door width
- Shown with brown resin brackets and terracotta tile top
- Available in 1250, 1410 and 1800mm overall widths

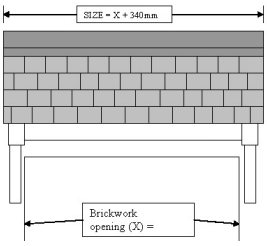

Warwick

- Flat topped lead look canopy with smooth white fascia incorporating period detailing
- Available in white, brown, oak or rosewood
- Includes GRP corbels (BRG8 shown, see page 470 for details)

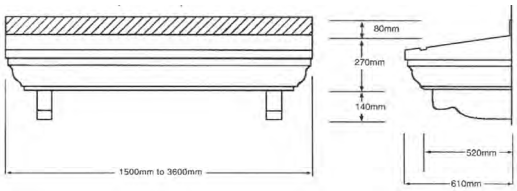

Available as a special order only and delivered direct anywhere in the UK

Dentil Moulded Fascia Porch Roof

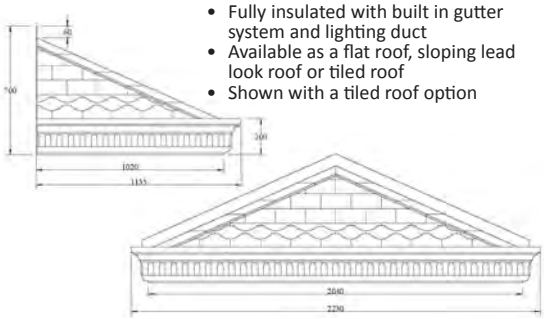

- Fully insulated with built in gutter system and lighting duct
- Available as a flat roof, sloping lead look roof or tiled roof
- Shown with a tiled roof option

Flexi-Roof Modules

- Ideal for porches, extensions & canopies
- Constructed from glass reinforced plastic
- Each roof is made to your exact requirements
- Max size to the outside of the fixing timber 6000 x 3100mm
- Available in 3 shades of white, brown, oak and rosewood

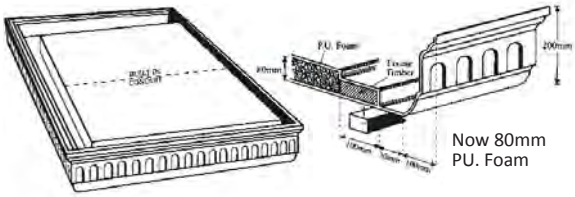

GRP Brackets

- Suitable to fit most over door canopies (see pages 468-469)
- BRG11 is also suitable for bow window base unit brackets
- Available in a choice of colours
- Fast and easy installation

BRG4
width 80mm

BRG5
width 70mm

BRG6
width 70mm

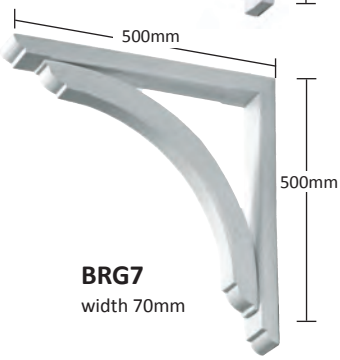

BRG7
width 70mm

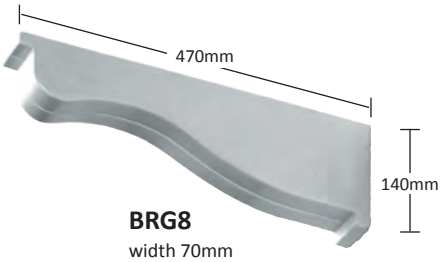

BRG8
width 70mm

BRG11
width 140mm

Available as a special order only and delivered direct anywhere in the UK

Georgian

- Transform your door with this surround
- Georgian top available in any length up to a maximum of 2990mm in one piece
- Pillars are also available separately
- Lead look top optional
- Fully guaranteed for 10 years

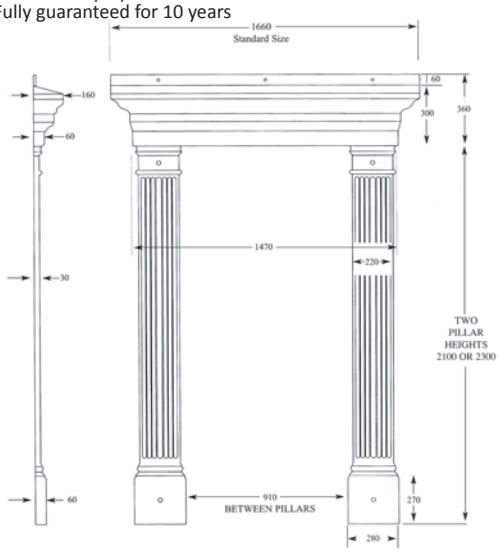

Victorian Portico

- Manufactured in a Satin finish.
- Smooth pillars this elegant design will transform the appearance of any door and side lights
- Available in white, brown, oak and rosewood
- Shown with lead top
- Fully guaranteed for 10 years

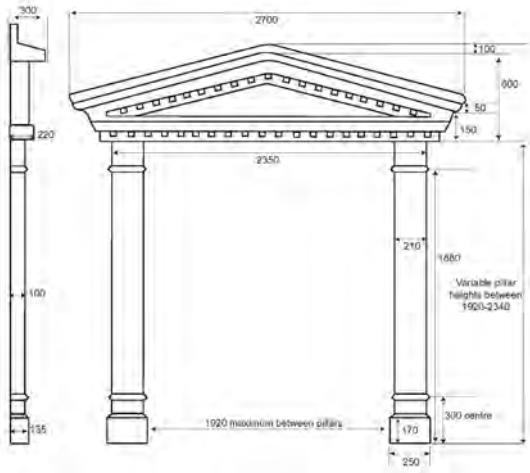

A

Acoustic Vents 100-101
Air Tool Accessories 370-373
Air Tools 368-371
Air Wedge 424
Allen Keys 423

B

Bi-fold Door Locks 148-151 & 333-336
Bi-fold Gear 337-343
  Caldwell 337-343
Bow Canopies 467
Bow Window Base Units 467
Buckets 440

C

Cabin Hooks 271 & 366
Caulk Guns 389
Chisels 414
Clamps 424
Cleaners 396-397
Cockspur Handles 54-56 & 306-307
  Overview 55
  Kore 56
  Securistyle 56 & 307
  Trojan 56 & 307
Coping Saws 419
Countersinks 424
Cutters 408-409
Cylinder Pulls & Esctheons 226-227

D

Deburring Tools 409
Digital Keypad Set Up 142-143
Door Surrounds 471
Door Chains 270
Door Closers 272
Door Handles 147, 234-252 & 347-353
  Overview 235
  Hoppe 245-252
  Kore 250 & 252
  Mila 237
  Trojan 238-244 & 347-353
  Yale 251-252
Door Hinges 253-262
  Overview 253
  Delta 257
  Kore 254
  MILA 256
  Trojan 255, 258-259 & 261-262
  Yale 254-255, 258 & 260
Door Keeps See Lock pages
Door Locks - Multipoint 108-203
Drainage Caps 53
Draught Excluders 400-402
Drill Bits 425-428
Dust Pan 398
Dust Sheets 398

E

Electric Striker Set Up 140-141
Espagnolette Bars 24-33 & 300
  Overview 24
  MACO 25, 27 & 32
  Cotswold 28-29
  Kenrick 30-31 & 300
  Kore 26
  Yale 33
Espagnolette Handles 54-61, 306 & 308-309
  Overview 55
  Mila 57-58
  Regal Hardware 60-61 & 309
  Securistyle 59
  Trojan 59

F

Files 420
Finger Operated Shootbolts 116
Fixing Anchors 431
Fixing Foam & Fillers 392-395
Flat Flexi Porch Roof 470
Flush Sash 37 & 42
  MACO 42
  Yale 37
Folding Openers 66-69 & 310-313
  Caldwell 66-67 & 310-311
  Strand Duoflex 68-69 & 312-313
French Casement Gearing 36 & 41
  MACO 41
  Yale 36
Friction Hinges 4-23, 286-299
  Overview 5
  Cotswold 10-15, 290-294
  For Triple Glazing 14, 22-23, 294 & 299
  Kore 6-9 & 287-289
  Securistyle 19-22 & 295-298
  Trojan 23 & 299
  Yale 16-18

G

Gasket 407
Glass Retention 404
Glazed-in Vents 104-106 & 329
Glazing Mallets & Hammers 417
Glazing Packers 402-403
Glazing Tape 399
Glazing Tools 405-407
Gloves 442
Glues 382-383 & 387
GRP Brackets 470
Guttering 458-466
  Accessories 466
  Half Round System 458-462
  Square System 458-459 & 463-466

H

Hacksaws 419
Hammers 416
Herritage Hardware 60-64 & 309
  Regal Espagnoletes Handles 60-61& 309
  Regal Stays & Peg 62-64
Highline Window Controls 70-82 & 314-327
  Electrical Controls 78-82 & 322-326
  Manual Controls 70-77 & 314-321
  Order/Quote Form 327
Hinge Protectors 46-47 & 259
  GT Window Products 47 & 259
  Kore 46 & 259

K

Knives 410-413
Knobs 231
Knockers 268-269

L

Lacquer Spray 390
Ladders 447
Lead Dresser 417
Letterplates 263-267 & 362-365
  Overview 263
  Trojan 265
  Yale 264-267
Letters 270
Locating Wedges 52
Louvres 102-103 & 330-331
Low Threshold 274-278

K

Keeps - Door Locks See Lock pages
Keeps - Window Locks See Lock pages

M
Machinery 448
Machinery Consumables 374-380
Mallets 416-417
Mastic Guns 389
Measuring Equipment 436-439
Multipoint Door Locks 108-203
- Overview 110-111 & 154-156
- Avantis 109, 111 & 129-132
- ERA 158
- Fullex 109, 155-156 & 200-203
- GU 109, 111, 138-140, 145, 155 & 179-191
- KFV 111 & 142-143
- MACO 108, 111, 133-137, 144 & 158
- Millenco 155& 199
- Winkhaus 109, 154 & 192-198
- Yale 108, 110, 146, 148-151, 154, 156 & 159-161
- Yale Lockmaster 108, 110, 117-128, 154, 156 & 162-177
- Yale Lockmaster 21 108, 110 & 112-115

N
Numerals 270

O
Over Door Canopies 468-469

P
Panic Bars 210-213 & 344-346
- Overview 210
- OMEC 213 & 345
- Strand 211 & 346
- YALE 212 & 344

Patio Rollers 332
Pet Doors 279-283
Pitched Flexi Porch 470
PPE 442-444
Profile Cylinders 214-225 & 354-361
- Overview 214-215
- Eurospec 217-218 & 220
- ISEO 217
- Yale 219 & 221-225

Profile Cylinder Accessories 226-227
Pull Knobs 231
Pull Handles 228-233
PVCu Building Products 450-457
- Overview 451
- Angles 455
- Architraves 454
- Capping Boards 452
- Cladding 453 & 456
- Cladding Pins 457
- Edge Fillet 454-455
- Fascia Boards 452-453
- General Purpose Boards 453-454
- Liner/Fascia Boards 452
- Polytop Plastic Headed Pins 457
- Soffit/Cladding 456
- Trim 454-455
- Ventilation Strip 453

R
Repair Kits 391
Replacement Lockcases 156-158
Restrictors 48-53, 271 & 301-304
- Overview 48
- Cotswold 50, 271 & 302
- Cubelock 49 & 303
- JJ Banks 50 & 304
- Kore 50, 53, 271 & 304-305
- Securistyle 51
- Yale 53 & 305

Roller Stands 445
Run Up Bricks 53

S
Sandpaper 420-421
Sash Blockers 53
Sash Seal 52
Sash Security 53
Saws 418-419
Screwdrivers & Bits 432-434
Screws 429-430
Sealants 388
Seam Rollers 440
Shootbolt Keeps, Door 178
Shootbolts 24 & 34-45
- Overview 24
- MACO 38-40
- Trojan 45
- Yale 34-35

Silicone Sprays 396
Silicones 384-386
Siliding Patio Door Locks 146-147
Smart Home 204-209
- Overview 204
- Kubu 205
- MACO 209
- Yale 206-208

Sockets 435
Spanners 435
Sprue Guide 417
Spyholes 269
Stable Door Locks 144-145
- GU 145
- MACO 144

Stays & Pegs 62-64

T
Tap and Die Set 425
Tape 398-399
Tilt Before Turn Accessories 90
- Locking Turn Function Restrictor 90
- Multivent Ventilation Restrictor 90
- Turn Restrictor 90

Tilt Before Turn Gear 85-89
- GU UNI-JET S or D 85
- MACO Face Fix or Concealed 86-89

Tilt Before Turn Handles 84
- Hoppe 84
- Trojan 84

Tool Boxes 441
Touch Up Pens 391
Trickle Vents 93-99 & 328
Trowels 440

V
Ventilation 91-106 & 328-331
Acoustic Vents 100-101
- Greenwood 100-101
- RW Simon 101

Glazed-in Vents 104-106 &, 329
- RW Simon 104-106 & 329

Louvres 102-103 & 330-331
Trickle Vents 93-99 & 328
- Glazpart 93
- Greenwood 94-97
- RW Simon 97-99

Vices 424

W
Window Fixings & Cleats 431
Windowboard 466
Windowboard Accessories 466
Wrap-Around Gearing 43-44
- MACO 43
- GT Window Products 44

Wrecking Bars 415

WINDOW WARE – ("THE SELLER") – GENERAL CONDITIONS OF SALE

1. DEFINITIONS AND INTERPRETATIONS

(1) In these conditions:- "Buyer" means the person who accepts a quotation of the Seller for the sale of the Goods or whose order for the Goods is accepted by the Seller. "Conditions" means these standard terms and conditions of sale. "Consumer" means a Buyer that is entering into the Contract not in the course of business. "Contract" means the contract for the sale and purchase of the Goods (in which these Conditions apply). "Goods" means the goods (including any instalment of the goods or any parts for them) which the Seller is to supply pursuant to or in connection with the Buyer's purchase order and Contract. "Service" means the service if any which the Seller is to perform pursuant to or in connection with the Buyer's purchase order and the Contract.

(2) Any reference in these Conditions to any provision of a statute shall be construed as a reference to that provision as amended, re-enacted or extended at the relevant time.

(3) If the Buyer is a Consumer then Clause 17 applies.

2. ACCEPTANCE AND AMENDMENT

(1) These Conditions shall (unless or except to the extent a director of the Seller otherwise agrees in writing) apply to all tenders, offers, quotations, acceptances, agreements and deliveries relating to the sale of Goods and/or the provision of the Service by the Seller and the Buyer shall be deemed to assent thereto.

(2) No other conditions or modifications of these Conditions shall be binding on the Seller unless agreed by a director of the Seller in writing and the Seller shall not be deemed to accept such other conditions nor to waive any of the Conditions by failing to object to provisions contained in any purchase order or other communication from the Buyer.

(3) No representative, agent or salesman who is not a director of the Seller has any authority to amend or waive any of the Conditions or other provisions of the Contract.

3. SPECIFICATIONS

(1) Any advice or recommendation given by the Seller or its employees or agents as to the storage, application or use of the Goods which is not confirmed in writing by the Seller is followed or acted upon entirely at the Buyer's own risk, and accordingly the Seller shall not be liable for any such advice or recommendation which is not so confirmed. Such advice or recommendation shall not form part of the Contract or Conditions.

(2) All descriptions, specifications, drawings, weights, dimensions, capacities, prices, performance ratings and other data quoted or submitted by the Seller or included in any sales literature, quotation, price list, acknowledgement of order, invoice or other document or information issued by the Seller are to be deemed approximate only (except where stated in writing to be exact or expressly made of the essence) and subject thereto none of such items or any part thereof shall form part of the Contract.

(3) Any typographical, clerical or other error or omission in any sales literature, quotation, price list, acknowledgement of order, invoice or other document or information issued by the Seller shall be subject to correction without any liability on the part of the Seller.

(4) The Seller reserves the right to make any changes without notice in the specification of the Goods which are required to conform with any applicable safety or other legal requirements or which do not materially affect their quality or performance.

(5) Where the Buyer supplies or specifies materials to be used in the Contract the Seller will not be liable for any defect in the Goods or the Service or errors in delivery or performance caused by defects in or unsuitability of materials so supplied or specified.

4. ORDERS

No order which has been accepted by the Seller may be cancelled by the Buyer except with the agreement in writing of the Seller and on terms that the Buyer shall indemnify the Seller in full against all loss (including loss of profit), costs (including the cost of all labour and materials used), damages, charges and expenses incurred by the Seller as a result of cancellation.

5. PRICES

(1) Unless otherwise agreed in writing or stated on the Seller's acknowledgement of order the price for the Goods and/or the Service shall be the Seller's list price at date of the Seller's acceptance of the Buyer's order.

(2) After an order has become binding on the Seller, all prices will have VAT added at the appropriate rate and are subject to increase to reflect any increases in costs to the Seller (including without limitation costs of materials, labour, transport and services, and fluctuations in currency exchange rates and any tax, duty, fee or charge imposed by any government or other authority) prior to delivery, any change in delivery dates, quantities or specifications for the Goods or the Service which is requested by the Buyer, or any delay caused by any instructions of the Buyer or failure of the Buyer to give the Seller adequate information or instructions.

(3) Unless otherwise agreed in writing or stated on the Seller's acknowledgement of order, packaging, delivery and transport charges and insurance are not included in the price and will be charged at extra at the Seller's then current rates for the same.

(4) From time to time, prices for items advertised on the Seller's website may differ from prices shown in the then current catalogue or on the Seller's trade counter. In these circumstances the Seller is not obliged to honour any website price (except on orders placed through the website).

(5) 'While Stocks Last' and similar pricing promotions may be withdrawn by the Seller at any time without prior notice. The Seller is not obliged to honour any orders placed where promotional stock has been exhausted, even where this is due to an error or omission on the part of the Seller.

(6) In the event of an obvious pricing error, where the goods are incorrectly priced, the Seller is not obliged to supply the Goods at the incorrect price.

(7) Where orders are placed through the website, acceptance will only be when the Goods are despatched. Notwithstanding this, we may send an email confirming receipt of your order. This is not acceptance and we will not be bound until the Goods are despatched.

6. PAYMENT

(1) Unless otherwise agreed in writing or stated on the Seller's acknowledgement of order, the net invoice amount shall become due for payment by the Buyer 30 days after date of invoice or (if earlier) upon the occurrence of any circumstances whereunder, pursuant to the Contract or these Conditions, payment falls immediately due. Time of payment shall be of the essence of the Contract.

(2) The Seller reserves the right at any time before proceeding further with an order to demand full or partial payment of monies due and payable under the Contract and under any other contract between the Seller and the Buyer.

(3) If the Buyer defaults in any payment the Seller may in addition to exercising the right contained in Condition 6.2 above suspend work, delay or withhold delivery or performance or cancel the Contract or suspend, delay or withhold delivery or performance under or cancel any other contract between the Seller and the Buyer and retain any progress payments on account already received under the Contract or under any other contract between the Seller and the Buyer.

(4) Interest at annual rate of 3 per cent above the base rate from time to time of Barclays Bank plc is payable on all overdue monies.

(5) The Seller shall have a lien on all undelivered Goods which the Buyer agrees to purchase from the Seller for all monies due from the Buyer to the Seller under any contract between them and the Buyer shall have no right of set-off in respect of such monies.

(6) All rights and remedies afforded in these Conditions for non-payment shall be in addition and without prejudice to all other rights and remedies available to the Seller under the Contract or at law.

7. DELIVERY

(1) Time of delivery is not of the essence of the Contract and any time or date specified by the Seller as the time at which or the date on which the Goods will be delivered or the Service will be performed is given and intended as an estimate only and the Seller shall not be liable for any loss, damage or expense howsoever arising from delay in delivery.

(2) The Seller reserves the right to make delivery by instalments unless otherwise expressly agreed in writing. The period during which delivery by installments may be made and the quantity of Goods delivered in each instalment shall be at the Seller's discretion.

(3) Where Goods are delivered in instalments, each delivery shall constitute a separate contract (in which these Conditions apply), (mutatis mutandis) and failure by the Seller to deliver any one or more of the instalments or any claim by the Buyer in respect of any one or more instalments shall not entitle the Buyer to treat the Contract as repudiated.

(4) Notwithstanding any express agreement as to the date of delivery of the Goods or performance of the Service the Seller may postpone or cancel delivery or performance in whole or in part when it is delayed in or prevented from making or obtaining any Goods or materials or parts or components or services therefore making delivery of any goods or performing any Service by, including but not limited to an act of God, strikes, lockouts, trade disputes or labour troubles or any cause beyond the Seller's reasonable control. During any of such events the Seller's obligations shall be suspended until such events cease or until the Seller cancels delivery or performance (as the case may be) and the Seller shall not be required to obtain elsewhere in the market goods or services with which to replace or permit it to produce Goods or perform the Service delivery or performance of which has been postponed or cancelled as a result of any production of the said events. In the event of cancellation, the Seller shall be paid pro rata for Goods delivered or work done to the date of cancellation.

(5) If the Buyer fails to take delivery of Goods or to give the Seller adequate delivery instructions at the time stated for delivery (otherwise than by reason of any cause beyond the Buyer's reasonable control or the Seller's fault) then, without prejudice to any other right or remedy available to the Seller (including its right to payment) the Seller may:-

(i) Attempt to re-deliver the goods, and charge the Buyer for the reasonable cost of transport; and

(ii) store the Goods until actual delivery and charge the Buyer for the reasonable costs (including insurance) of transportation and storage; and

(iii) sell the Goods at the best price readily obtainable and (after deducting all reasonable storage, transport and selling expenses) account to the Buyer for the excess over the price under the Contract or charge the Buyer for any shortfall below price under the Contract; and the Buyer shall indemnify the Seller in full against all losses, damages, charges and expenses incurred by the Seller as a result of the Buyer's said failure to take delivery or give adequate delivery instructions to the extent that the Seller's said losses, damages, charges and expenses are not covered by any payments made or monies obtained under (i), (ii) or (iii) above.

(6) Without prejudice to any other right or remedy of the Seller whether under these Conditions or otherwise, if the Buyer is to pay the Seller for the Goods on delivery of the Goods and fails to do so the Seller reserves the right not to deliver the Goods and to charge the Buyer for such attempted delivery and any later delivery of the Goods at the Seller's then current rates for the same.

(7) The Buyer shall be solely responsible for the proper unloading of the Goods. If, to assist the Buyer remove the Goods from point of delivery, the Seller or any sub-contractor does any loading or unloading of goods free of charge, no liability whatsoever shall thereby be incurred by the Seller or sub-contractor and the Buyer shall indemnify the Seller in respect thereof.

(8) Unless agreed otherwise by the Seller the Goods will be delivered to the Buyer's premises stated on the Seller's acknowledgement of order, subject to Condition 5.3 of these Conditions.

8. BUYER'S OBLIGATIONS AND CLAIMS ON DELIVERY & RETURNS POLICY

(1) The Buyer will:-

(i) Sign for any damages or lost packages at time of delivery; and

(ii) notify the Seller in writing within 5 days of delivery or before manufacturing with the Goods, whichever is the earlier, of any error in quantity, weight or description of Goods delivered.

(2) Failure to make any notification in accordance with paragraph Condition 8.1 above could mean that the buyer is unable to make a claim.

(3) Goods can only be returned in accordance with the following:

(i) Returns will be at the sole discretion of the Seller and Goods may only be returned upon receiving written consent from the Seller. The Sellers Returns Policy must be followed so that Goods can be clearly identified upon receipt and credited by the Seller in a timely manner; and

ii) goods should not have been used or damaged by the Buyer in any way. Returns should be sent back to the Seller in a re-saleable condition in the original packaging unless signed for as damaged, or were defective at point of receipt by the Buyer; and

(iii) unless Goods are defective, or have been sent by the Seller in error, returned items will be subject to cost of collection and a restocking charge which will be notified to the Buyer in advance. When a collection date has been agreed by the Buyer and the Seller but the carrier notifies the Seller there was nothing to collect, the Seller will pass on these fees to the Buyer.

10. TITLE TO GOODS All goods are supplied to the Buyer by the Seller on the following terms:

(1) The goods shall remain the sole and absolute property of the Seller as legal and equitable owner until such time as all sums due to the Seller from the Buyer, whether in respect of the goods or other goods or services, have been paid in full.

(2) Until such payment the Buyer shall be in possession of the goods solely as bailee for the Seller and shall store the goods separately in such a way as to enable them to be identified as the property of the Seller and maintain the Goods in satisfactory condition.

(3) The Seller reserves the immediate right at any time of re-possession of any goods to which it has retained title and thereafter to re-sell the same and for this purpose the Buyer hereby grants an irrevocable right and licence to the Seller's employees and agents to enter at any time upon all or any of its premises with or without vehicles during normal business hours. This right shall continue to subsist notwithstanding the termination of the contract for any reason and is without prejudice to any accrued rights of the Seller hereunder or otherwise.

(4) As a separate and independent condition, the Buyer shall be at liberty and may in the ordinary course of its business and prior to title passing, sell and deliver the goods to any third party but such right shall immediately cease should any of the events in 13(1) apply to the Buyer.

(5) Whilst the goods remain the property of the Seller, the Buyer shall insure the goods against all usual risks for an amount equal to or greater than the purchase price and hold the proceeds of such insurance on trust for the Seller.

11. WARRANTIES AND LIABILITY

(1) Subject as expressly provided in these Conditions all warranties, conditions or other terms implied by law are excluded to the fullest extent permitted by law, whether relating to the Goods and/or the Service or otherwise.

(2) The Seller will give a guarantee in respect of the Goods and/or the Service in its standard form from time to time for that type of Goods or the Service (as the case may be).

(3) Except as expressly provided in these Conditions, the Seller shall have no liability to the Buyer (whether arising under contract, tort (including negligence), breach of statutory duty or otherwise) in excess of the price of the Goods and shall have no liability for any indirect, special or consequential loss or damage or for any loss of profit, loss opportunity, loss of sales or loss of goodwill, costs, expenses or other claims for compensation whatsoever which arise out of or in connection with the supply of goods or their use or resale by the Buyer. Nothing in these Conditions shall limit or exclude the Seller's liability for death or personal injury, any fraud or for any other liability which it is not permitted to limit or exclude by operation of law.

12. TRADEMARKS, PATENTS AND OTHER INDUSTRIAL RIGHTS

(1) If any claim is made against the Buyer alleging that the Goods or the Service infringe any patent rights, registered designs, copyright or other industrial property rights of another then:- (i) the Buyer shall forthwith notify the Seller with full particulars; and (ii) the Seller or its suppliers or licensors (as the case may be) shall be at liberty at their expense to conduct all negotiations and/or litigation in respect thereof and (if necessary) in the name of the Buyer; and (iii) except pursuant to a final award, the Buyer shall not pay or accept any such claim or compromise any proceedings without the consent of the Seller (which shall not be unreasonably withheld or delayed); and if as a result of such negotiations or litigation the Buyer shall be unable to use the goods substantially for the purpose for which they were bought the Seller shall (except where Condition 13 below applies) take them back and refund the price thereof and such refund shall be in full satisfaction of all claims by the Buyer against the Seller.

(2) The Buyer shall indemnify the Seller against all actions, costs (including cost of defending legal proceedings), claims, proceedings and demands in respect of any infringement or alleged infringement by the Seller of patent rights, registered design, copyright, design rights or other industrial rights attributed to the Seller complying with any special instructions from or requirements of the Buyer relating to the Goods or the Service.

continued over...

(3) The Buyer shall not represent to its customers that it sells products manufactured by the Seller after the Buyer shall have ceased to purchase such products on a regular basis from the Seller and in such event the Buyer shall return to the Seller all sales literature relating to products manufactured by the Seller.

13. INSOLVENCY OF THE BUYER

(1) This Condition applies if:-

(i) the Buyer makes any voluntary arrangement with its creditors or (being an individual or firm) becomes bankrupt or (being a company) becomes subject to an administration order or goes into liquidation (otherwise than for the purpose of amalgamation or reconstruction); or

(ii) an encumbrancer takes possession, or a receiver is appointed, of any of the property or assets of the Buyer; or

(iii) the Buyer ceases, or threatens to cease, to carry on business; or

(iv) the Seller reasonably apprehends that any of the events mentioned above is about to occur in relation to the Buyer and notifies the Buyer accordingly.

(2) If this Condition applies then without prejudice to any other right or remedy available to the Seller, the Seller shall be entitled to suspend work, delay or withhold delivery under or cancel the Contract without any liability to the Buyer, and if the Goods have been delivered but not paid for the price shall become immediately due and payable notwithstanding any previous agreement or arrangement to the contrary.

14. AGE REQUIREMENTS FOR SPECIFIC GOODS

Where the Buyer places an order for age-restricted goods such as solvents or knives, the buyer confirms that they are over the age of 18 and that delivery will be received by a person over the age of 18.

15. DISPOSAL OF ELECTRICAL AND ELECTRONIC EQUIPMENT

The WEEE regulations exist to ensure that disposal of certain electrical and electronics items is carried out in a sound environmental manner. All Buyers agree that they will be responsible for collection and disposal of any electrical and electronic equipment procured from the Seller.

16. GENERAL

(1) The Seller is a trading division of Heywood Williams Components Limited, itself a member of the group of companies whose holding company is Arran Isle Ltd., and accordingly the Seller may perform any of its obligations or exercise any of its rights by itself or through any other member of its group, provided that any act or omission of any such member shall be deemed to be the act or omission of the Seller.

(2) Any notice given hereunder must be in writing and may be affected by personal delivery, facsimile transmission, email (to finance@windowware.co.uk) or by registered mail postage and (subject, in each case to proof that such notice was properly addressed and dispatched) if effected by facsimile transmission or email shall be deemed to be received on the day of sending and if effected by post shall be deemed to be receive 48 hours after the date of posting.

(3) The Contract shall be personal to the Buyer and shall not, nor shall any rights under it, be assigned by the Buyer without the written consent of the Seller.

(4) No waiver by the Seller of any breach of the Contract by the Buyer shall be considered as a waiver of any subsequent breach of the same or any other provision.

(5) The Contract (and these Conditions) shall be governed by and constructed in accordance with the laws of England.

(6) If any provision of the Contract (or these Conditions) is held by any competent authority to be invalid or unenforceable in whole or in part the validity of the other provisions of the Contract (or these Conditions) and the remainder of the provision in question shall not be affected thereby.

17. TERMS APPLYING TO CONSUMERS ONLY

(1) PLEASE NOTE THAT THIS SECTION ONLY APPLIES WHEN THE BUYER IS ENTERING THE CONTRACT AS A CONSUMER

(2) Where the Buyer is a Consumer under the Unfair Contract Terms Act 1977 (the Buyer enters into the Contract not in the course of business), the following provisions may, subject to determination by the Courts, have no force or effect:

(i) 6(5) – no right of set-off;

(ii) 6(4) – payment of interest on late payment;

(iii) 10(3) – right of entry and re-possession;

(iv) 11(1) and 11(3) – liability;

(v) 4, 7(5)(iii), 7(7) and 12(2) – indemnities.

(3) Should any defect occur in the Goods, other than one for which the Buyer is responsible, the Seller will at their option either, replace or repair the Goods (at no charge to the Buyer) as soon as is reasonably practicable.

(4) Following receipt of the Goods, the Buyer can cancel their order by notifying the Seller within 14 working days of the date on which the Goods were delivered. The Buyer can return the Goods for a refund. If the Buyer's purchase order comprises of more than one item the Buyer can cancel and return any of the items individually or in combination.

(5) Where the Buyer cancels their order after the Goods have been delivered or collected the Buyer agrees to return the Goods to the Seller by following the procedure set out below..

(6) The Buyer agrees to return the Goods in full, in a resalable condition and securely packaged (properly repacked in their original packaging if they were removed from it) and unused. The Buyer is responsible for all costs of returning the Goods subject to the exceptions set out below.

(7) Nothing within these Conditions affects the Buyer's rights under law, and in particular the Buyer will always be entitled to return products to the Seller for a full refund if they were misdescribed, or are not of satisfactory quality or reasonably fit for their purpose and the Seller cannot remedy the fault to the Buyer's reasonable satisfaction. Only in such circumstances and/or if the Seller provides the Buyer with substitute products which the Buyer does not want will the Seller refund the Buyer's reasonable costs to return the products to the Seller.

(8) If the Goods are damaged whilst in the Buyer's care (including damage caused in assembling or disassembling the Goods), if the Buyer fails to return all parts of the Goods or otherwise if the Buyer's failure to take reasonable care of the Goods means that the Seller reasonably believes that a resale will not be possible, the Buyer agrees that the Seller may withhold payment of all or part of the refund in respect of the Goods as compensation for the Seller's loss on these Goods.

(9) The Seller will make all refunds to the card used for payment.

18. DATA PROTECTION

(1) We will make a search with a credit reference agency which will keep a record of that search and will share that information with other businesses. We may also make enquiries with a credit reference agency. If supplying payment data to a credit reference agency we will monitor and record information relating to your trade performance and such records will be made available to credit reference agencies, who will share that information with other businesses in assessing applications for credit and fraud prevention. For Credit Circle members we will record information relating to your trade credit performance and such records will be made available to other organisations to access applications for credit.

...END

We've got it

www.windowware.co.uk

T: 01234 242724 | E: sales@windowware.co.uk